FORM NO. 3312-679

TORO®

MODEL NO. 30563

INSTALLATION INSTRUCTIONS

ENGINE SHIELD KIT

(GROUNDSMASTER 220)

1. Remove cotter pin and nut attaching the steering tube socket assembly to the gear box pivot arm. Separate the pivot arm and steering tube, lowering the steering tube (Fig 1).

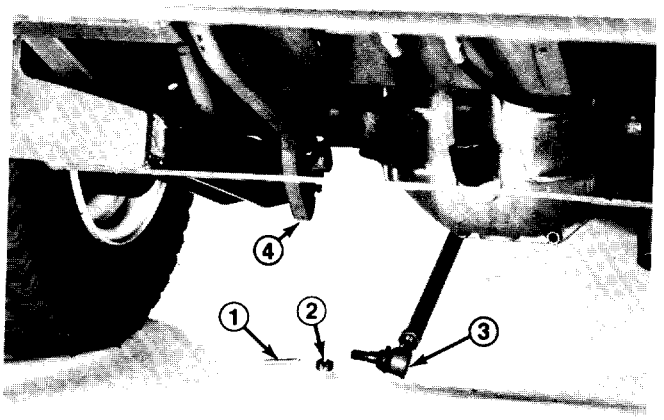

Figure 1

1. *Cotter pin*
2. *Nut*
3. *Steering tube*
4. *Pivot arm*

2. Remove fuel tank from chassis:

   A. Remove knob from lift lever.

   B. Remove capscrews, lockwashers and flatwashers securing seat support cover to frame.

   C. Pivot seat forward and support it to prevent it from falling accidentally. Lift seat support cover off frame.

   D. Unplug seat switch. Remove capscrews, lockwashers and flatwashers securing seat support to top of frame (Fig. 2). Set seat support aside.

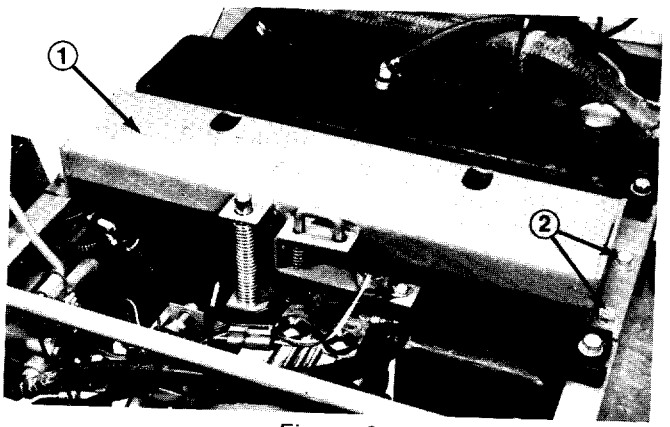

Figure 2

1. *Seat support*
2. *Capscrew, lockwasher and flatwasher*

   E. Remove capscrews, lockwashers and flatwashers securing fuel tank to top of frame (Fig. 13). However, do not lift fuel tank out of chassis at this time.

   F. Place drain pan below fittings on bottom of fuel tank.

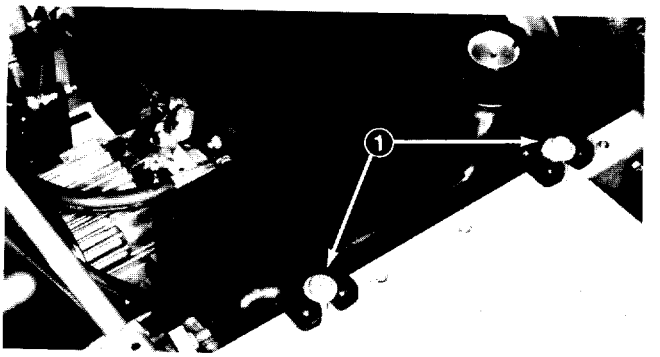

Figure 3

1. *Capscrew, lockwasher and flatwasher*

DANGER

Since gasoline is highly flammable, drain it outdoors and make sure engine is cool to prevent a potential fire hazard. Wipe up any gasoline that may have spilled. Do not drain gasoline near any open flame or where gasoline fumes may be ignited by a spark. Do not smoke a cigar, cigarette, or a pipe when handling gasoline.

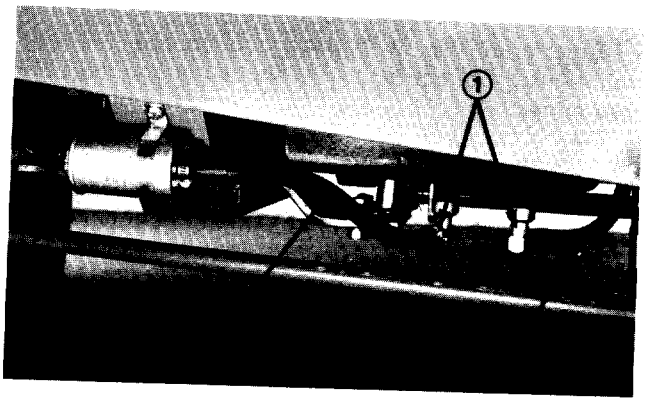

Figure 4

1. *Fuel tank fittings*
2. *Fuel line*

G. Loosen clamps holding both fuel lines on fuel tank fittings. Pull lines off fittings and allow gasoline to flow into large gas can (Fig. 4).

H. Lift fuel tank up and remove it from the chassis.

3. Drill two (2) .406" (10.3 mm) holes through bottom flange of the frame side channels at indicated locations (Fig. 5).

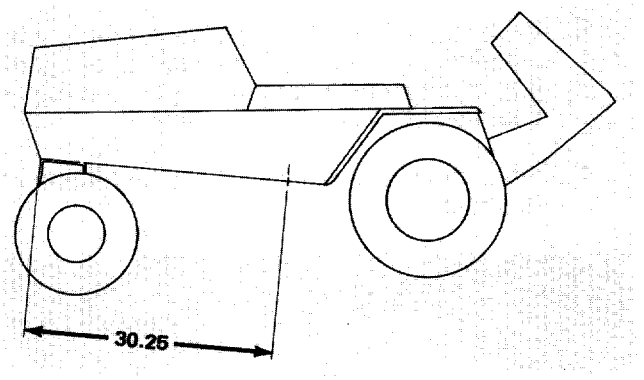

Figure 5

4. Install front engine shield. Tilt the bottom shield forward and lift sliding the rubber inserts over the drive shaft and PTO drive shaft. Bolt shield to channel with 3/8 - 16 x 7/8" bolts, lockwashers and nuts (Fig. 6).

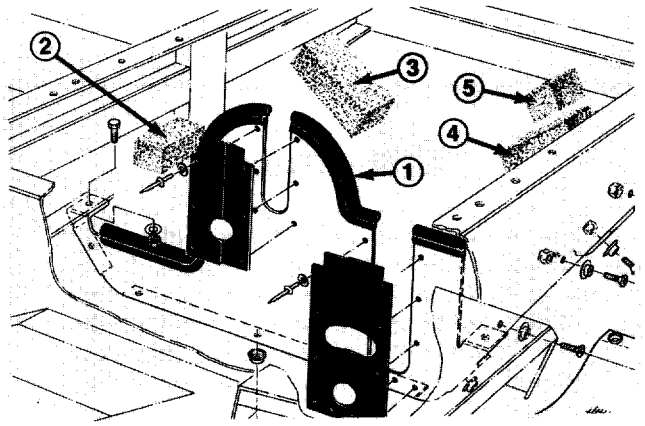

Figure 6

1. Front engine shield
2. Front foam
3. Large rear foam
4. Large rear foam
5. Small rear foam

5. Snap grass screen in place on front engine shield (the rear edge of the screen is slightly larger than the front edge).

6. Stretch screen up over right hand side of frame and use to locate position for front two (2) snap studs. Drill two (2) .116 dia. holes in right side of unit (Fig. 7).

Note: Fuel tank should be removed before drilling, to avoid puncturing tank.

7. Locate position for rear snap stud and drill one (1) .156 dia. hole through side frame and engine strap (Fig. 7).

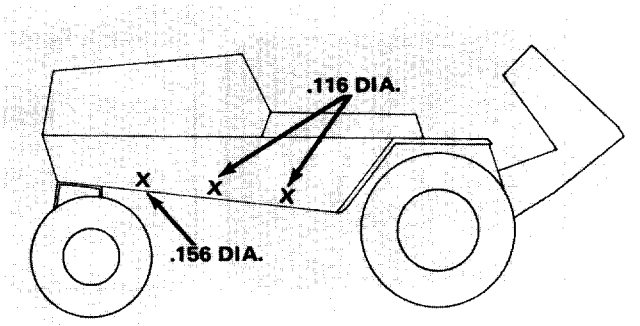

Figure 7

8. Stretch screen up over left side of unit and locate and drill one (1) .116 dia. hole thru bottom flange of left frame channel, just forward of front engine shield (behind battery box) (Fig. 8).

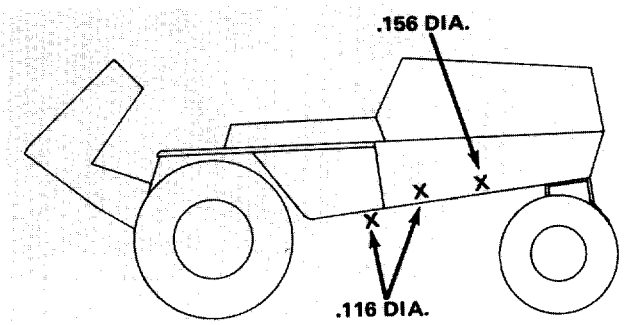

Figure 8

9. Locate and drill one (1) .116 dia. hole thru side channel for middle snap stud (Fig. 8).

10. Locate and drill one (1) .156 dia. hole thru left side frame and engine strap for middle snap stud (Fig. 8).

11. Stretch screen across rear engine strap and locate and drill five (5) .156 dia. holes thru strap.

12. Attach four (4) snap studs in .116 dia. holes with 6-32 self tapping screws and seven (7) snap studs in .156 dia. holes with 6-32 flathead machine screws and locknuts. Snap screen into position on all sides.

13. On right side of engine, insert large rear foam piece between engine and rear engine strap (Fig. 6).

14. On left side of engine, insert large foam piece between engine oil cooler hoses and engine strap. Insert small rear foam piece between engine and oil cooler hoses (Fig. 6).

15. Reinstall fuel tank. Make sure front shield is between the two fuel elbows on the bottom of the fuel tank.

16. Slide foam engine shields between fuel tank and side channels (Fig. 6).

17. Reinstall steering tube.