BEST COPY AVAILABLE

FORM NO. 3312-794

TORO

MODEL NO. 30576 - 60001 & UP

INSTALLATION INSTRUCTIONS

GRASS COLLECTION SYSTEM

GROUNDSMASTER® 117

SAFETY INSTRUCTIONS

BEFORE OPERATING

1. Read and understand the contents of this Operator's Manual before starting and operating the machine. Become familiar with all controls and how to stop quickly. A replacement manual is available by sending complete Model and Serial Number to:

   The Toro Company
   8111 Lyndale Avenue South
   Minneapolis, Minnestoa,55420

2. Never allow children or adults unfamiliar with it's operation to operate the machine; and keep everyone, especially children and pets, away from the area of operation.

3. Remove sticks, stones, wire and any other debris or objects that might be picked up and thrown by the cutter blades.

4. Keep all shields and safety devices in place. If a shield, safety device or decal is defective or damaged, repair or replace it before operation is commenced. Also, tighten any loose nuts, bolts and screws to make sure machine is in safe operating condition.

5. Do not operate machine while wearing sandals, tennis shoes, sneakers or shorts. Also, do not wear loose fitting clothing because it could get caught in moving parts. Always wear long pants and substantial shoes. Wearing safety glasses, safety shoes and a helmet is advisable and required by some local ordinances and insurance regulations.

6. Be sure interlock switches are adjusted correctly so engine cannot be started unless traction pedal is released – neutral position – and PTO switch is in DISENGAGE position.

7. Fill fuel tank with gasoline before starting the engine. Avoid spilling any gasoline. Since gasoline is highly flammable, handle it carefully – DO NOT SMOKE.

   A. Use an approved gasoline container.

   B. Do not fill tank while engine is hot or running.

   C. Do not smoke while handling gasoline.

   D. Fill fuel tank outdoors and up to about one inch (25 mm) from top of the tank, not the filler neck. KEEP HOOD CLOSED when filling.

   E. Wipe up any spilled gasoline. Install gasoline container cap and machine fuel tank cap securely before starting the engine.

WHILE OPERATING

8. Do not run the engine in a confined area without adequate ventilation. Exhaust fumes are hazardous and could possibly be deadly.

9. Maximum seating capacity is one person. Never carry passengers.

10. Sit on the seat when starting the engine and operating the machine.

11. When starting the engine:

   A. Engage parking brake.

   B. Be sure traction pedal is in neutral and PTO is in disengage position.

   C. After engine is started, release parking brake and keep foot off traction pedal. Machine must not move. If movement is evident, the neutral return mechanism is adjusted incorrectly; therefore, shut engine off and adjust until machine does not move when traction pedal is released.

2. Using the machine demands attention, and to prevent loss of control

   A. Mow only in daylight or when there is good artificial light.

   B. Watch for holes or other hidden hazards.

   C. Do not drive close to a sand trap ditch, creek or other hazard.

   D. Reduce speed when making sharp turns and when turning on hillsides.

©The Toro Company — 1986

SAFETY INSTRUCTIONS

E. Avoid sudden stops and starts.

F. Before backing up, look to the rear to be sure no one is behind the machine.

G. Watch out for traffic when near or crossing roads. Always yield the right-of-way.

13. The grass deflector or complete blower assembly must always be installed on the cutting unit. If the cutting unit discharge area ever plugs, disengage PTO and shut engine off. Use a stick to remove the obstruction.

14. Never raise the cutting unit while the blades are rotating.

15. If the cutting blades strike a solid object or the machine vibrates abnormally, disengage PTO, move throttle to SLOW, set parking brake and shut engine off. Remove key from switch and disconnect high tension wires from spark plugs to prevent possibility of accidental starting. Check cutting unit and traction unit for damage and defective parts. Make all repairs before restarting the engine and operating the cutting unit. Make sure blades are in good condition and blade nuts are tight.

16. Cut grass slopes carefully. When going up hill or downhill do not start or stop suddenly.

17. Do not touch engine, muffler or its adjacent shroud while engine is running or soon after it is stopped because these areas could be hot enough to cause a burn.

18. Lower the cutting unit or other attached implement to the ground and remove key from switch whenever machine is left unattended.

19. Before getting off the seat:

A. Move traction pedal to neutral position and remove foot from pedal.

B. Disengage the PTO and set the parking brake

C. Shut the engine off and remove key from ignition switch. Wait for all movement to stop before getting off the seat.

MAINTENANCE

20. Remove key from ignition switch and disconnect high tension wire from spark plug to prevent accidental starting of the engine when servicing, adjusting or storing the machine

21. Perform only those maintenance instructions described in this manual. If major repairs are ever needed or assistance is desired, contact an Authorized TORO Distributor. Ask about Mobile Service Maintenance.

22. To reduce potential fire hazard, keep the engine free of excessive grease, grass, leaves and accumulations of dirt.

23. Be sure machine is in safe operating condition by keeping nuts, bolts and screws tight. Check the blade mounting nuts frequently to be sure they are tight.

24. Make sure all hydraulic line connectors are tight, and all hydraulic hoses and lines are in good condition before applying pressure to the system.

25. Keep body and hands away from pin hole leaks or nozzles that eject hydraulic fluid under high pressure. Use paper or cardboard, not hands, to search for leaks. Hydraulic fluid escaping under pressure can have sufficient force to penetrate skin and do serious damage. If fluid is ejected into the skin it must be surgically removed within a few hours by a doctor familiar with this form of injury or gangrene may result.

26. Before disconnecting or performing any work on the hydraulic system, all pressure in system must be relieved by stopping engine and lowering implement to the ground.

27. If the engine must be running to perform a maintenance adjustment, keep hands, feet, clothing and other parts of the body away from the cutting unit blades and other moving parts.

28. Do not overspeed the engine by changing governor settings. Maximum engine speed (with engine coupled to transmission) is 3100-3300 rpm. To ensure safety and accuracy, have an Authorized TORO Distributor check maximum engine speed with a tachometer.

29. Engine must be shut off before checking oil or adding oil to the crankcase.

30. At the time of manufacture, the GROUNDSMASTER 117 grass collection system conformed to safety standards in effect for riding mowers. Therefore, to assure optimum performance and safety, always purchase genuine TORO replacement parts and accessories. Replacement parts and accessories made by other manufacturers could be dangerous. Such use could void the product warranty of The Toro Company.

SAFETY INSTRUCTIONS

⚠ CAUTION

1. KEEP ALL SHIELDS IN PLACE.
2. BEFORE LEAVING OPERATOR'S POSITION.
   A. MOVE TRANSMISSION TO NEUTRAL
   B. DISENGAGE ATTACHMENT CLUTCH.
   C. SET PARKING BRAKE.
   D. SHUT OFF ENGINE.
   E. REMOVE IGNITION KEY.
3. WAIT FOR ALL MOVEMENT TO STOP BEFORE SERVICING MACHINE.
4. KEEP BYSTANDERS FROM AREAS BEING MOWED

LOOSE PARTS CHART

Description	Qty.	Use
Valve Stem Extension Capscrew — 5/16-18 x 4" lg. Flatwasher — 5/16	1 2 2	Mount Wheel Weight
Capscrew — 5/16-18 x 7/8" lg. Capscrew — 5/16 x 5/8" lg. Keps Locknut — 5/16-18	1 2 3	Mount Front Baffle
Carriage Bolt — 5/16-18 Capscrew — 5/16-18 x 7/8" lg. Keps Locknut — 5/16-18	2 1 3	Mount Rear Baffle
Capscrew — 3/8-16 x 1" lg. Lockwasher Capscrew — 1/4-20 x 3/4" lg. Locknut — 1/4-20	4 4 2 2	Mount Center Ring Baffle
Capscrew — 1/4-20 x 3/4" lg. Locknut — 1/4-20	2 2	Mount Right Ring Baffle
Bracket Plate Carriage Bolt — 5/16-18 x 5/8" lg. Keps Locknut — 5/16-18 Capscrew — 5/16-18 x 3/4" lg.	2 4 6 2	Mount Blower Assembly
Capscrew — 5/16-18 x 3/4" lg. Washer — 5/16 Keps Locknut — 5/16-18	3 3 3	Install Idler Assembly
Latch Machine Screw — 10-24 x 1/2" lg. Flange Nut — 10-24	1 2 2	Mount Belt Cover Latch
Warning Decal	1	Apply to Carrier Frame or Deck
Capscrew — 5/16-18 x 1" lg. Locknut — 5/16-18 Reinforcing Plate	6 6 1	Mount Hopper Brackets
Capscrew — 5/16-18 x 2" Locknut — 5/16-18	5 5	Mount Hopper Frame
Knob Washer Deflector Pivot Brkt. R.H. & L.H.	2 2 2	Mount Grass Deflector

INSTALL WHEEL WEIGHT
(Left Front Wheel Only)

Note: If unit is equipped with Optional Brake Kit, refer to Brake Kit Installation Instructions for additional information on mounting of wheel weight.

1. Remove cap from valve stem and install valve stem extension.

2. Slide wheel weight into mounting position over valve stem aligning weight with (2) mounting holes in wheel.

3. Secure weight to wheel with (2) 5/16-18 x 4" lg. capscrews and flatwashers.

INSTALL NEW SPINDLE PULLEY

1. Remove right belt cover from deck.

2. Remove nut securing spring anchor to capscrew in deck. Lift anchor off capscrew and allow belt to relax (Fig. 1).

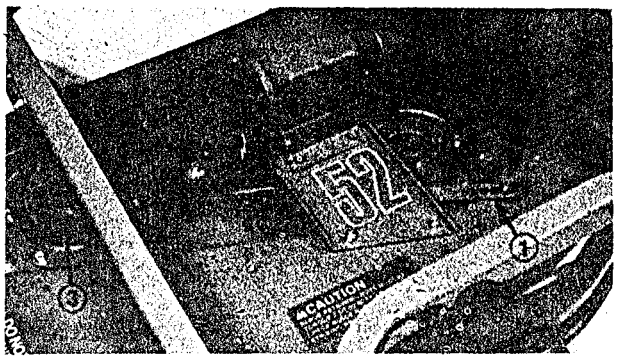

Figure 1

1. Spring anchor 2. Nut 3. Right spindle pulley

3. Remove belt from right spindle pulley (Fig. 1).

4. Remove six flange bolts and nuts holding spindle housing assembly and support ring against cutting unit (Fig. 2). Slide spindle housing assembly out bottom of cutting unit.

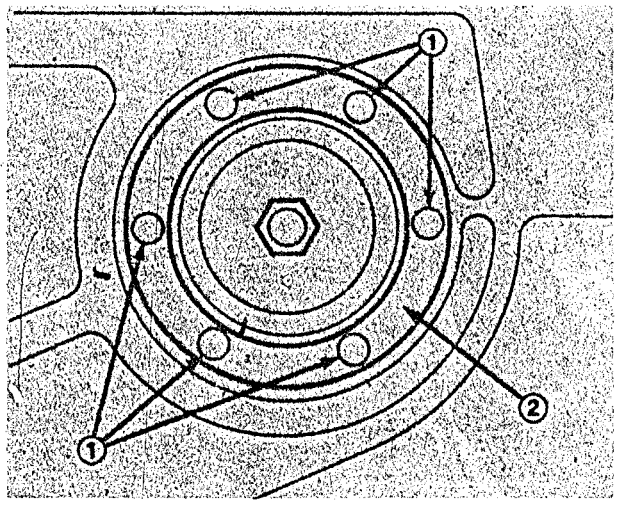

Figure 2

1. Flange bolts 2. Support ring

5. Remove nut retaining pulley on spindle shaft. Pull pulley off shaft.

6. Install new double spindle pulley on spindle shaft with locknut. Tighten nut to 50-60 ft-lb (68-81 N·m).

7. Slide pulley end of spindle housing assembly through hole in cutting unit. Mount spindle assembly and support ring in place with six flange bolts and nuts.

8. Install deck belt around large pulley.

9. Readjust belt tension by pulling spring anchor until 30-40 lbs. of force is applied to spring.

10. Reinstall spring anchor on capscrew in appropriate mounting hole and install nut.

REMOVE GRASS DEFLECTOR

1. Remove capscrews, locknuts, and springs securing deflector mounts to pivot brackets. Remove deflector (Fig. 3).

2. Remove carriage bolts, lockwashers, and nuts securing pivot brackets to housing (Fig. 3).

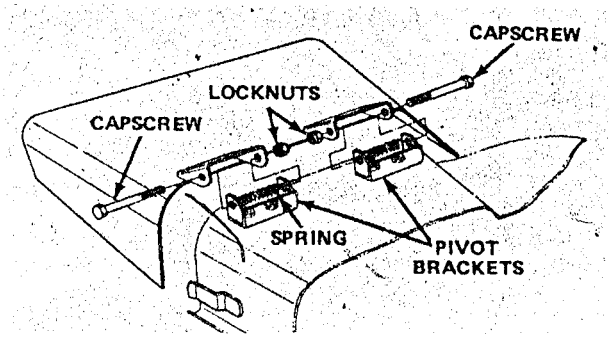

Figure 3

3. Retain grass deflector and mounting parts for use later in installation procedure.

MOUNT DECK BAFFLES

1. Mark and drill a 3/8" dia. hole thru the center of the deflector stop (Fig. 4).

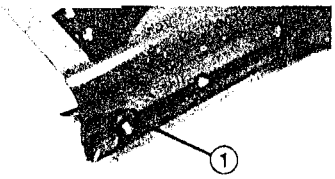

Figure 4

1. Deflector stop

2. Mount end of front baffle to deck with a 5/16-18 x 7/8" lg. capscrew and locknut as shown in Fig. 5.

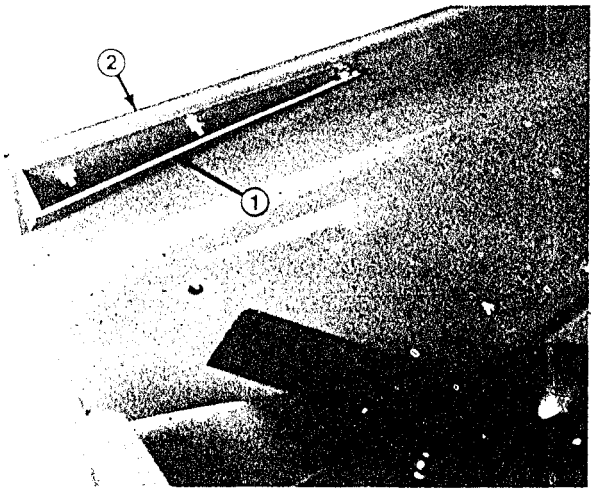

Figure 5

1. Front baffle
2. Edge of deck

3. Align baffle with edge of deck and use baffle as a template to mark and drill (2) remaining 3/8" dia. holes in deck (Fig. 5).

4. Secure baffle to deck with (2) 5/16-18 x 5/8" lg. capscrews and locknuts (Fig. 5).

5. Align rear baffle with corner of discharge opening as shown in Fig. 6.

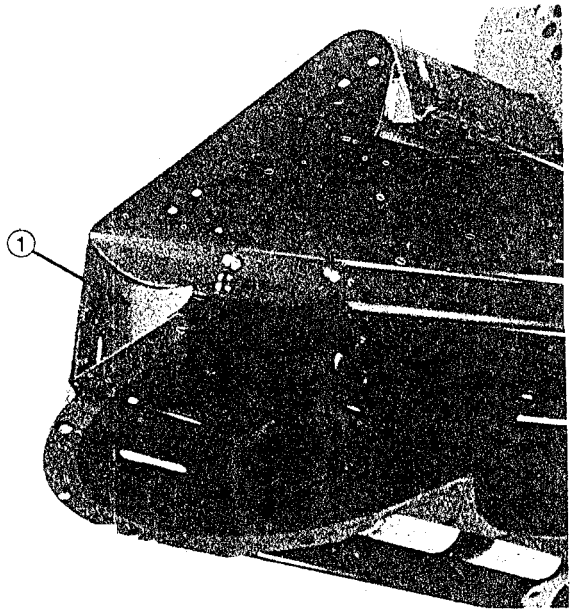

Figure 6

1. Rear baffle
2. Carriage bolts

6. Using baffle as a template, mark and drill (3) 3/8" dia. holes thru deck.

7. Secure baffle to deck with (2) 5/16x3/4" carriage bolts, (1) 5/16-18 x 7/8" lg. capscrew and (3) locknuts.

8. Position center ring baffle on deck as shown in Fig. 7. Using a long thin pencil or punch, mark (4) mounting holes in deck. Holes may already be in deck

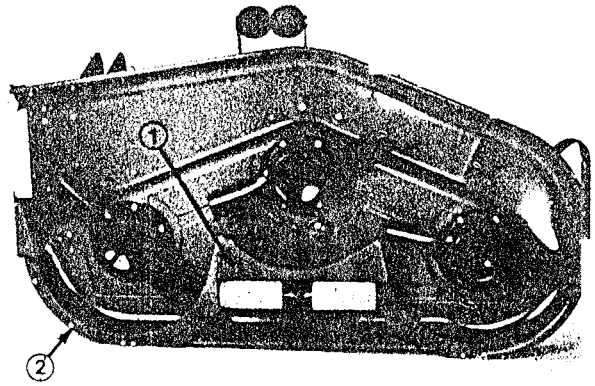

Figure 7

1. Center ring baffle
2. Right ring baffle

9. Drill (4) 13/32" holes in deck, if required.

10. Mount center baffle to deck with (4) 3/8-16 x 1" lg. capscrews and lock washers (Fig. 7).

11. Using center baffle as a template, mark and drill (2) 9/32" dia. holes thru center of curved edge of deck (Fig. 7).

12. Secure baffle to edge of deck with (2) 1/4-20 x 3/4" lg. capscrews and locknuts (Fig. 7).

13. Align right ring baffle with end of center baffle and edge of deck (Fig. 7). Mark and drill (2) 9/32" dia. holes in center of curved edge of deck.

14. Secure right baffle to deck with (2) 1/4-20 x 3/4" lg. capscrews and locknuts.

15. Make sure all fasteners are tight. Carefully rotate blades by hand to make sure they clear baffles.

MOUNT BLOWER

1. Position blower and mounting brackets on deck, aligning mounting holes with holes previously used for mounting grass deflector (Fig. 8). Figure shown with blower removed.

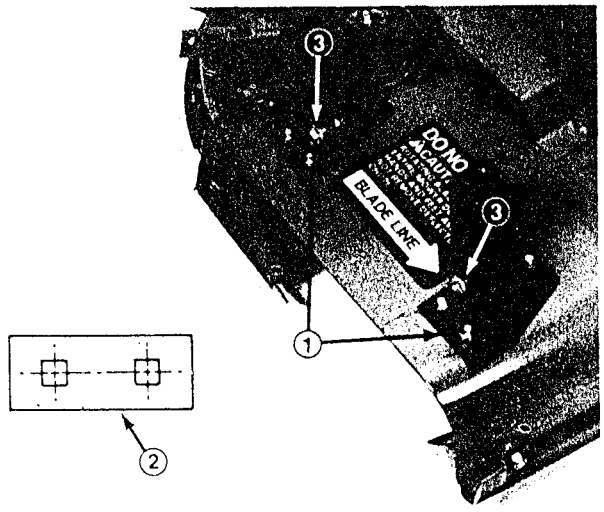

Figure 8

1. Blower mounting brackets
2. Bracket plate
3. Alignment studs

2. Using each bracket as a template, mark location of third mounting hole (left rear position) as shown in Fig. 9.

3. Remove (2) knobs and washers securing blower to mounting brackets. Remove blower.

4. Secure each bracket to deck with a bracket plate (Fig. 8, Inset), (2) 5/16-18 x 5/8" lg. carriage bolts and locknuts. Position bracket plates between bolt head and bottom side of deck.

5. Drill a 3/8" dia. hole for each bracket and secure with a 5/16-18 x 3/4" lg. capscrew and locknut.

6. Route belt around small spindle pulley.

7. Slide blower onto mounting bracket alignment studs (Fig. 9) while routing belt around blower pulley.



Figure 9

1. Left rear mounting hole

Note: If blower assembly does not easily slide onto mounting brackets, loosen alignment bolts slilghtly.

8. Secure blower to brackets with (2) knobs and washers.

INSTALL IDLER ASSEMBLY

1. Position idler assembly on deck as shown in Fig. 10.

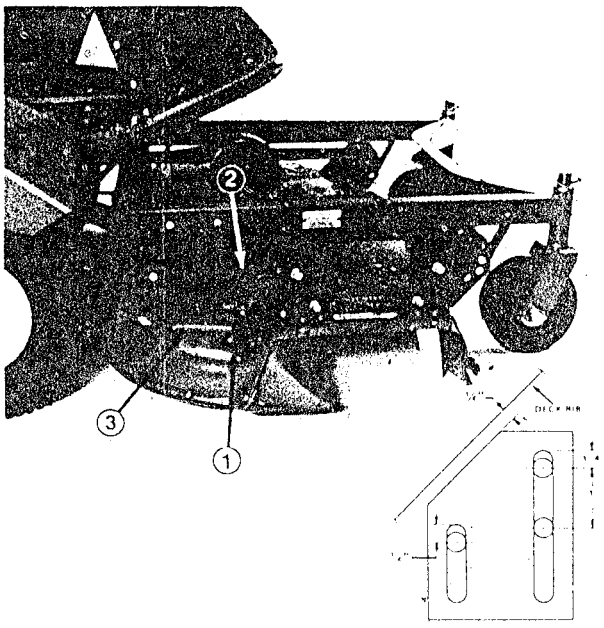

Figure 10

1. Idler assembly
2. Idler lever
3. Raised rib in deck

2. Engage idler lever (toward belt) and slide idler pulley firmly into blower belt. There should be at least 1/4" clearance between front of idler mounting bracket and raised rib in deck (Fig. 10, Inset). Mounting bracket should be positioned on flat part of deck. Make sure idler pulley clears spindle pulley and blower.

3. Using dimensions shown in Fig. 10, Inset, locate and drill (3) 3/8" dia. holes in deck.

4. Disengage idler lever and mount idler assembly to deck with (3) 5/16-18 x 3/4" lg. capscrews, 5/16 washers, and locknuts. Position washer between nut and idler assembly.

5. Engage idler lever and check belt tension. Adjust if necessary.

MODIFY BELT COVER

1. Measure 6-1/4" from bend in belt cover. Mark dimension and cut off excess material (Fig. 11).

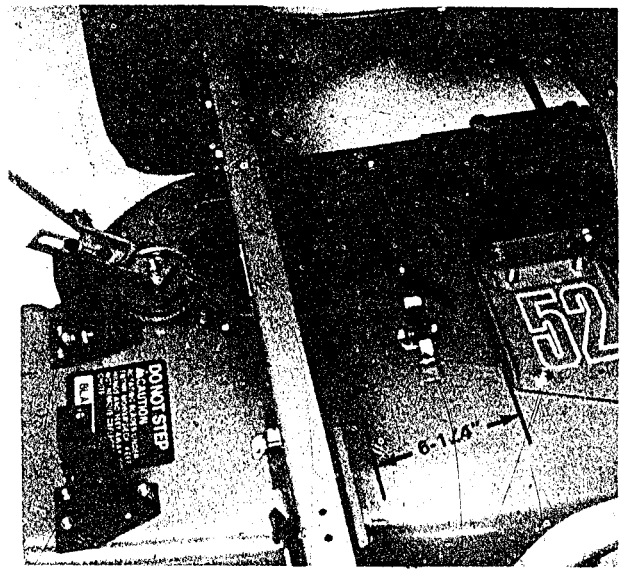

Figure 11

2. Reinstall belt cover and secure latch.

MOUNT NEW COVER LATCH

1. Install new spindle pulley cover on cutting deck (Fig. 12).

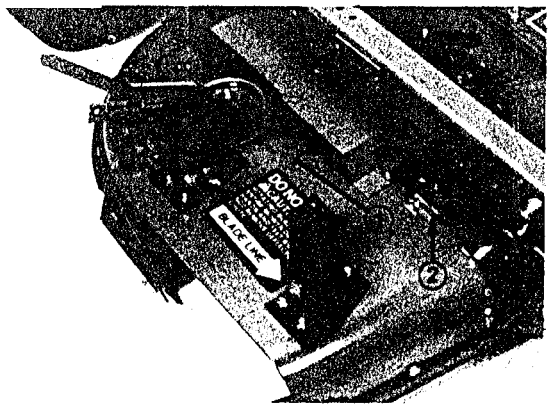

Figure 12

1. New cover
2. Latch

2. Hook latch to front of cover and engage latch.

3. Locate and mark position of latch mounting holes in deck. Drill (2) 7/32" dia. holes thru deck.

4. Secure latch to deck with (2) machine screws and flange nuts (Fig. 12).

5. Apply warning decal to deck next to blower assembly.

INSTALL HOPPER ASSEMBLY

IMPORTANT: Remove fuel tank mounting straps and raise right side of fuel tank when drilling mounting holes and installing rear bracket. Use caution when drilling holes in side and rear frame members, so drill does not contact fuel tank or hydraulic reservoir.

1. Locate and drill (4) .375" dia. holes in right side of machine as shown in Fig. 13. Use (2) front and (2) rear capscrews to measure from.

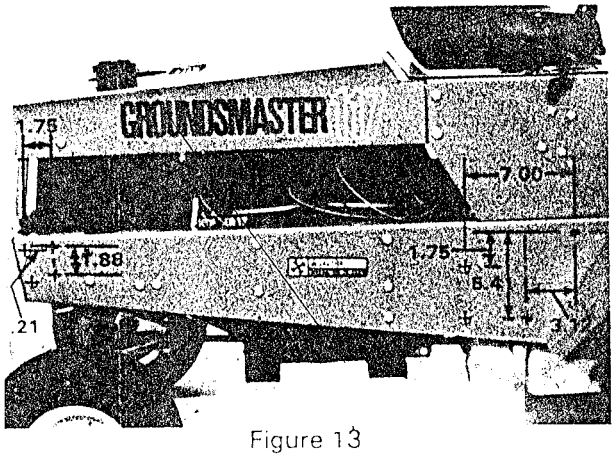

Figure 13

2. Align rear bracket with (2) mounting holes drilled. Use bracket as a template and mark and drill (2) .344" dia. holes in back of machine. Secure rear bracket to machine with (4) 5/16-18 x 1" lg. capscrews and nuts (Fig. 14 & 15).

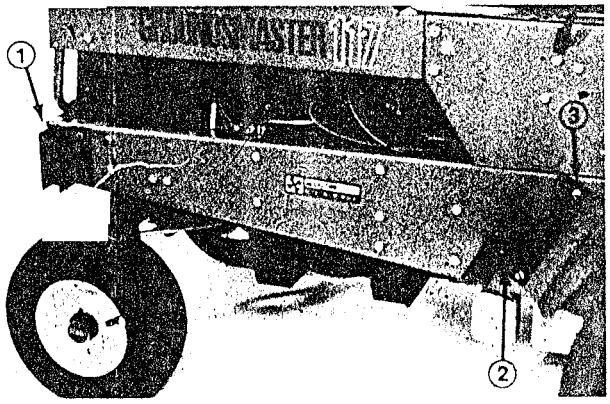

Figure 14

1. Rear bracket 2. Front bracket 3. Reinforcing plate on this screw

3. Secure front bracket to machine with (2) 5/16-18 x 1" lg capscrews, nuts and (1) reinforcing plate. Plate to be positioned between nut and inside of frame channel on top capscrew (Fig. 14).

4. Slide hopper frame into mounting brackets, align mounting holes and secure with (5) 5/16-18 x 2" lg. capscrews and nuts (Fig. 15).

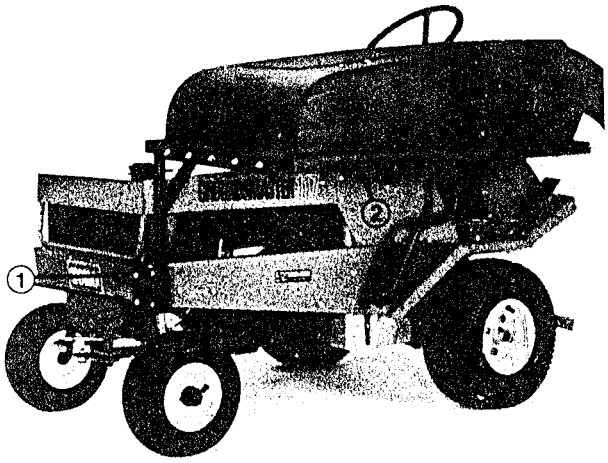

Figure 15

1. Rear mounting holes 2. Hopper frame

5. Raise hopper top, pivot locking clips upward, slide hopper into frame and lower locking clips. Hopper handle should be positioned in front (Fig. 16).

Note: When lowering hopper top, make sure bag link pivots upward and top fits over chute (Fig. 16).

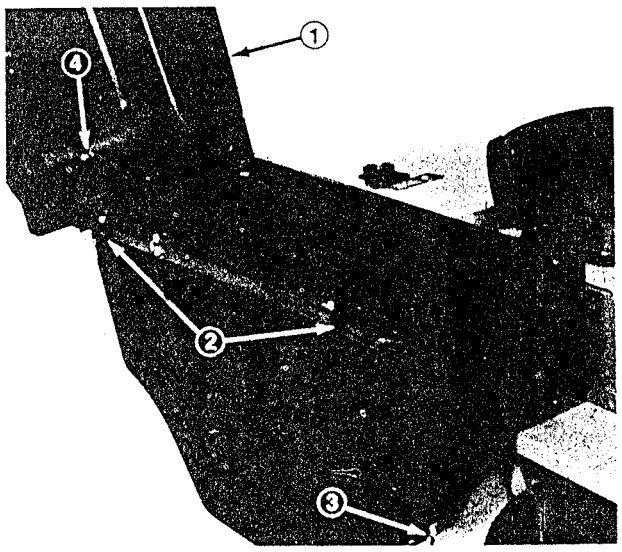

Figure 16

1. Hopper top 2. Locking clips 3. Hopper handle 4. Bag link

GRASS DEFLECTOR STORAGE

1. Position deflector mounts on outside of pivot brackets and secure parts together with capscrews, locknuts and springs (Fig. 17). Both locknuts must face each other. Tighten locknuts until they are flush against deflector pivots. Lift deflector and allow it to drop to check spring tension.

2. Mount grass deflector to front of hopper frame with (2) knobs and washers, when using grass catcher (Fig. 17).

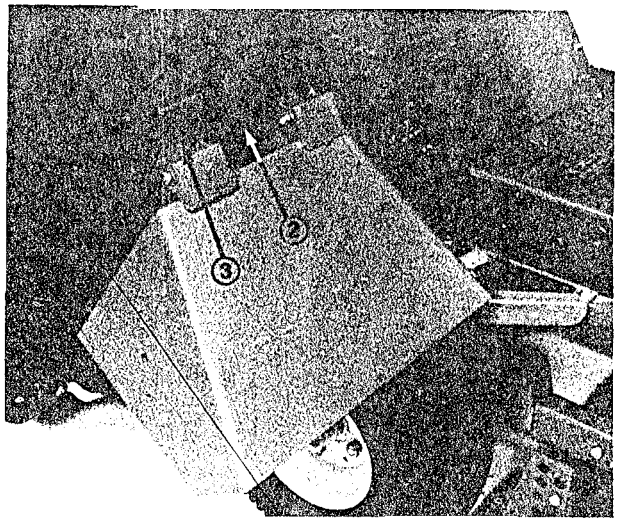

Figure 17

1. Grass deflector
2. Hopper frame
3. Knob and washer
4. Pivot brackets

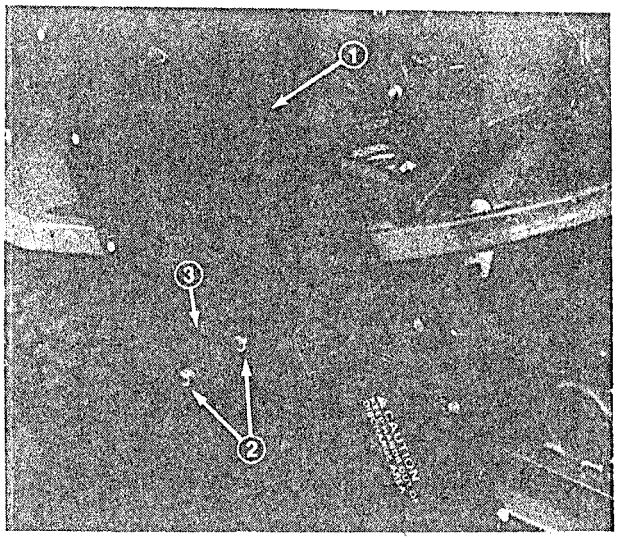

Figure 18

1. Chute
2. Mounting studs
3. Mounting bracket

MOUNT BLOWER HOUSING CHUTE

1. Set deck into desired height-of-cut setting.

2. Slide chute over blower opening and onto mounting studs (Fig. 18).

3. Lower hopper hood and align chute with hood snout. Secure chute in position with locknuts and brackets. Wide end of brackets to be positioned toward rear (Fig. 18).

OPERATING INSTRUCTIONS

OPERATING CHARACTERISTICS

WARNING

When grass collector is removed, NEVER operate without deflector in place.

For best performance, regulate traction pedal to keep engine rpm high and somewhat constant. A good rule to follow is: decrease ground speed as the load on the cutting blade increases; and increase ground speed as load on the blades decreases. This allows the engine, working with the transmission, to sense the proper ground speed while maintaining high blade tip speed, necessary for good quality-of-cut, vacuuming action, and to throw grass into hopper. If blower speed drops too low plugging may result. Refer to Cutting Unit and Traction Unit Operator's Manual for operation of each.

CAUTION

Use care to avoid collision between grass bag and any stationary objects. Always trim with left side of cutting unit.

1. This grass collector is designed for use in wet or dry conditions. Do not collect extremely long grass as the bag will fill too quickly.

2. The grass collector hood is designed to exhaust air. This allows the hopper to fill completely without decreasing performance. Grass will fall through the opening in the front of the hood when the hopper is full. Immediately disengage the power take off, set brake, and shut off ignition. Empty hopper. Failure to empty hopper will plug the chute. After emptying hopper check that grass clippings have not fallen into chute.

3. When bagging wet, heavy grass, some clippings may not be thrown completely through the chute. The hole in the bottom of the chute allows these clippings to drop out without plugging the chute. When this happens, reduce ground speed.

4. Optional Hi-sail blades (Toro part no. 44-5480) will give improved performance in set cutting conditions.

5. While operating, check frequently for excessive clippings left on turf or uncut grass. If those conditions occur, the blower or cutting unit may be plugged. Stop unit, disengage PTO, set brake, and shut off ignition and check for obstructions in the chute, blower or cutting unit. Clear any obstructions using a stick or similar tool. Check that screen in hood is clear of

obstructions. Check blower belt tension, if slipping, readjust.

DANGER

Never place hands or feet in chute, blower, or cutting unit.

6. Cut grass often, especially when turf growth is rapid. If shorter turf is desired, cut the grass again. Overlap swaths to produce an even cutting pattern.

IMPORTANT: When transporting unit, tie down grass collector hood or back unit onto truck or trailer to avoid wind throwing hood open and damaging it.

7. To remove blower assembly, shut off engine, disengage idler assembly, remove belt cover and lift belt off spindle pulley. Remove (2) knobs and washers securing blower to mounting brackets and remove blower, belt, and chute. Slide cutting unit grass deflector onto alignment bolts and secure to mounting brackets with knobs and washers. Reinstall belt cover (Fig. 19).

Note: If blower assembly or grass deflector do not easily slide on or off mounting brackets, loosen alignment bolts slightly.

8. Reverse procedure to reinstall blower assembly.

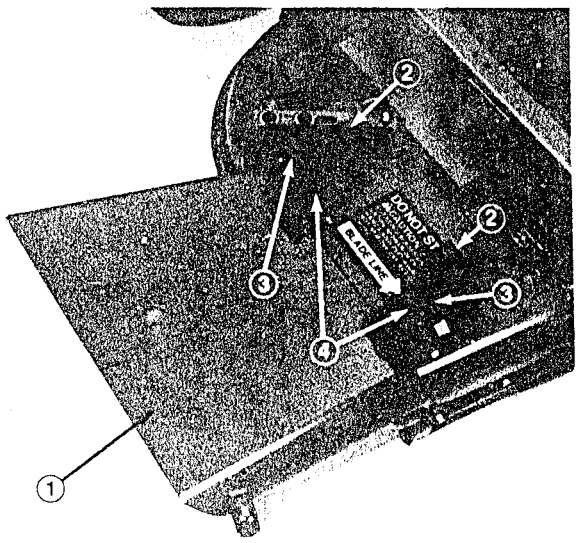

Figure 19

1. Grass deflector 3. Knob and washer
2. Mounting bracket. 4. Alignment bolts

MAINTENANCE

1. Keep unit clean, checking that engine cooling fins are free of dirt and chaff. Make sure all fasteners are tight. Check baffles and shields for wear and replace as needed.

2. Check gearbox impeller for tightness every 50 hours. Torque impeller shaft bolt to 220-230 in-lbs.

3. Clean grass clippings from hood, chute, blower, and cutting unit after each use. Wash underside of cutting unit daily with hose. An excessive buildup of clippings will impair bagging performance

4. Check belt tension and wear every 50 hours. To adjust belt tension, loosen idler mounting screws, engage idler lever and push idler pulley firmly into blower belt. Tighten mounting screws.

5. The blower gear box should need little maintenance. Check for leakage every 50 hours. If leakage should occur, replace seals and refill with two oz. of high quality moly di-sulfide grease. Repack bearings with same before assembling.

6. Refer to Cutting Unit and Traction Unit Operator's Manuals for service requirements of each.

MAINTENANCE RECORD

Date	Hours Used							

MAINTENANCE RECORD

Date	Hours Used							

The Toro Promise

A ONE YEAR LIMITED WARRANTY ON COMMERCIAL PRODUCTS OTHER THAN TRIMMERS AND BLOWERS.

The Toro Company promises to repair your TORO Product if defective in materials or workmanship. The following time periods from the date of purchase apply:

Commercial Products	1 Year

The costs of parts and labor are included, but the customer pays the transportation costs on walk rotary mowers, trimmers and blowers.

If you feel your TORO product is defective and wish to rely on The Toro Promise, the following procedure is recommended:

1. Contact your Authorized TORO Distributor or Commercial Dealer (the Yellow Pages of your telephone directory is a good reference source).
2. The TORO Distributor or Commercial Dealer will advise you on the arrangements that can be made to inspect and repair your product.
3. The TORO Distributor or Commercial Dealer will inspect the product and advise you whether the product is defective and, if so, make all repairs necessary to correct the defect without an extra charge to you.

If for any reason you are dissatisfied with the distributor's analysis of the defect or the service performed, you may contact us.

Write:

TORO Commercial Products Service Department
8111 Lyndale Avenue South
Minneapolis, Minnesota 55420

The above remedy of product defects through repair by an Authorized TORO Distributor or Commercial Dealer is the purchaser's sole remedy for any defect.

THERE IS NO OTHER EXPRESS WARRANTY. ALL IMPLIED WARRANTIES OF MERCHANTABILITY AND FITNESS FOR USE ARE LIMITED TO THE DURATION OF THE EXPRESS WARRANTY

Some states do not allow limitations on how long an implied warranty lasts, so the above limitation may not apply to you.

This Warranty applies only to parts or components which are defective and does not cover repairs necessary due to normal wear, misuse, accidents, or lack of proper maintenance. Regular, routine maintenance of the unit to keep it in proper condition is the responsibility of the owner.

All warranty repairs reimbursable under the Toro Promise must be performed by an Authorized TORO Commercial Dealer or Distributor using Toro approved replacement parts.

Repairs or attempted repairs by anyone other than an Authorized TORO Distributor or Commercial Dealer are not reimbursable under the Toro Promise. In addition, these unauthorized repair attempts may result in additional malfunctions, the correction of which is not covered by warranty.

THE TORO COMPANY IS NOT LIABLE FOR INDIRECT, INCIDENTAL OR CONSEQUENTIAL DAMAGES IN CONNECTION WITH THE USE OF THE PRODUCT INCLUDING ANY COST OR EXPENSE OF PROVIDING SUBSTITUTE EQUIPMENT OR SERVICE DURING PERIODS OF MALFUNCTION OR NON-USE.

Some states do not allow the exclusion or limitation of incidental or consequential damages, so the above limitation or exclusion may not apply to you.

This warranty gives you specific legal rights, and you may also have other rights which vary from state to state.

COUNTRIES OTHER THAN THE UNITED STATES OR CANADA

Customers who have purchased TORO products exported from the United States or Canada should contact their TORO Distributor (Dealer) to obtain guarantee policies for your country, province or state. If for any reason you are dissatisfied with your Distributor's service or have difficulty obtaining guarantee information, contact the TORO importer. If all other remedies fail, you may contact us at The Toro Company.

Compliance with Radio Interference Regulations Certified.
Certifie Conforme au Reglement sur le Brouillage Radioelectrique.

Printed in U.S.A.