FORM 3312-977 Rev. B

TORO

MODEL NO. 38180-7000001 thru 8000001 & UP
MODEL NO. 38185-7000001 thru 8000001 & UP

OPERATOR'S MANUAL

CCR 2000™ SNOWTHROWER

SAFETY INSTRUCTIONS

This safety alert symbol means CAUTION — PERSONAL SAFETY INSTRUCTION. Read the instruction because it has to do with safety. Failure to comply with the instruction may result in personal injury.

The Snowthrower is designed and tested to offer safe and effective service, provided it is operated in strict accordance with the following Safety instructions. Failure to comply with the following instructions MAY RESULT IN PERSONAL INJURY.

BEFORE OPERATING

1. Read this manual carefully. Never allow children to operate the snowthrower. Adults should operate the snowthrower only after reading this manual.

2. Be thoroughly familiar with controls and proper use of the unit. Know how to stop engine and snowthrower quickly.

3. Keep everyone, especially children and pets, away from area of operation. Thoroughly inspect area where snowthrower will be used. Remove all doormats, sleds, boards, wires and other foreign objects which might be picked up and thrown.

4. Wear adequate winter clothing and footwear which will improve footing on slippery surfaces. Exercise caution to avoid slipping or falling.

5. Since fuel is highly flammable, handle it carefully.

   A. Use an approved fuel container.

   B. Fill fuel tank outdoors, not indoors. Never add fuel to an engine that is running or hot.

   C. Install gas cap on fuel container and gas tank, and wipe up spilled gasoline before starting engine.

6. Keep all guards, shields and safety devices in place. If a guard, shield or safety device is defective, repair before operating. Keep all nuts, bolts and screws tight.

OPERATING

7. Use only the extension cord provided with the CCR-2000 Electric Start Model. Do not plug extension cord into outlet while standing in water or when hands are wet. Do not use cord if gasoline has been spilled. Replace damaged extension cord immediately.

8. Allow engine to warm up outdoors before operating. Do not run engine indoors.

9. Never operate snowthrower without good visibility or light. Always maintain secure footing and keep a firm grip on the handles. Walk; never run. DO NOT USE SNOWTHROWER ON ROOF.

10. Keep face, hands, feet and any other part of your body or clothing away from concealed, moving or rotating parts. ALWAYS STAY CLEAR OF DISCHARGE AREA.

11. Use extreme caution when operating on or crossing gravel drives, walks or roads. Stay alert for hidden hazards or traffic.

12. Never direct discharge toward or operate snowthrower near glass enclosures, motor vehicles, window wells or drop-offs.

13. Never direct discharge at bystanders or allow anyone in front of the snowthrower.

14. Never clear snow off steep slopes or across the faces of slopes. Exercise extreme caution when changing direction on slopes.

15. Do not overload snowthrower by clearing snow at too fast a rate.

16. After striking a foreign object or if snowthrower vibrates abnormally, stop engine by turning key to OFF. Thoroughly inspect snowthrower for any damage, obstruction or loose parts. Repair damage before restarting and operating.

17. WHENEVER YOU LEAVE THE OPERATING POSITION, STOP ENGINE BY TURNING KEY TO OFF. REMOVE KEY FROM SWITCH IF UNIT WILL BE UNATTENDED.

18. Before inspecting, adjusting, repairing or

©The Toro Company — 1986, Rev. 1987

SAFETY INSTRUCTIONS

clearing snowthrower, stop engine by turning key to OFF. Always wait for all moving parts to stop. Do not make adjustments while engine is running.

19. After clearing snow, let engine run for a few minutes so moving parts do not freeze.

MAINTENANCE AND STORAGE

20. REMOVE KEY FROM SWITCH when storing snowthrower. Store key in memorable place.

21. Never store snowthrower with fuel in the fuel tank inside a building where open flame or sparks are present. Allow engine to cool before storing. Never store snowthrower in house (living area) or basement because gasoline and fumes are highly flammable, explosive and dangerous if inhaled.

22. Keep all nuts, bolts and screws tight to assure snowthrower is in proper working condition.

23. Perform maintenance and use storage instructions described in this manual. Re-install fuel tank cap if upper shroud is removed for maintenance.

24. ALWAYS USE GENUINE TORO REPLACEMENT PARTS AND ACCESSORIES TO ASSURE SAFETY AND OPTIMUM PERFORMANCE. NEVER USE "WILL FIT" PARTS AND ACCESSORIES.

SYMBOL GLOSSARY



Whenever you leave the operating position, stop engine by turning key to OFF.



Rotor drive - Engaged



Rotor drive - Disengaged



Avoid injury from rotating auger, keep hands, feet and clothing away.



Read and understand operator's manual



Shut off engine before unclogging discharge chute



Primer pump



Choke on



Recoil starter



Ignition off



Ignition on



Stop engine to adjust, unclog or remove debris



110 volt starter



50:1 ratio unleaded gasoline to 2-cycle oil

ASSEMBLY INSTRUCTIONS

INSTALL WHEELS (Fig. 1)

1. Place push nut on hard, flat surface and insert end of axle into push nut. Using a hammer, strike opposite end of axle so nut seats firmly in place.

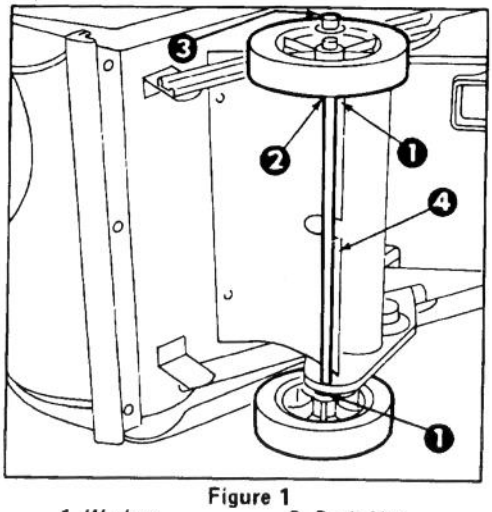

Figure 1

1. Washer *3. Push Nut*
2. Spacer *4. Plastic Flap*

2. Slide right hand wheel onto axle. Side of wheel with six spokes must face center of axle. Slide (2) washers onto axle.

3. From right side of unit, slide axle through rear hole in both brackets. Make sure plastic flaps are above axle. Next, tip onto installed wheel and put wood block under push nut. Slide a spacer, remaining washer and left hand wheel onto open end of axle. Using hammer, drive push nut onto axle.

INSTALL CHUTE CRANK (Fig. 2)

1. Insert flattened end of chute crank thru hole in shroud while aligning mounting bracket with holes in lower handle. Slowly rotate crank until flattened end fits into hidden gear opening and chute ring turns with crank. Secure mounting bracket to handle with (2) capscrews and locknuts.

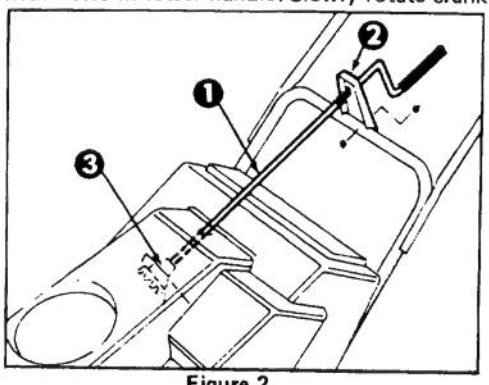

Figure 2

1. Chute Crank *3. Gear*
2. Mounting Bracket

INSTALL DISCHARGE CHUTE (Fig. 3)

1. Set discharge chute onto chute ring. Secure back of chute to center hole in ring with a carriage bolt and sems locknut: but do not tighten. Position nut on outside of chute.

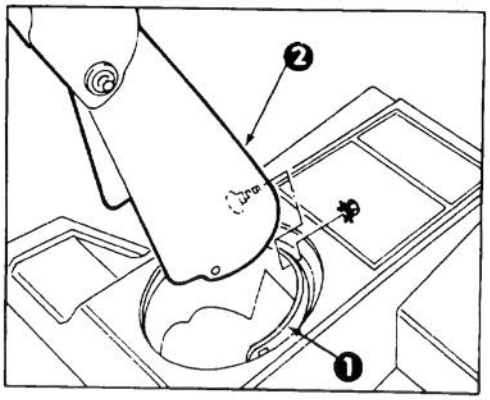

Figure 3

1. Chute Ring *2. Discharge Chute*

Note: Chute ring may be rotated to ease assembly of discharge chute.

2. Secure chute to remaining holes in chute ring and tighten all nuts.

INSTALL HANDLE (Fig. 4)

1. Remove tie securing control cable to lower handle.

2. Secure upper and lower handles in place with (3) handle bolts, (1) eyebolt and (4) locknuts. Use eyebolt to mount lower left side of handle. Eyebolt must be positioned perpendicular to handle when tightened.

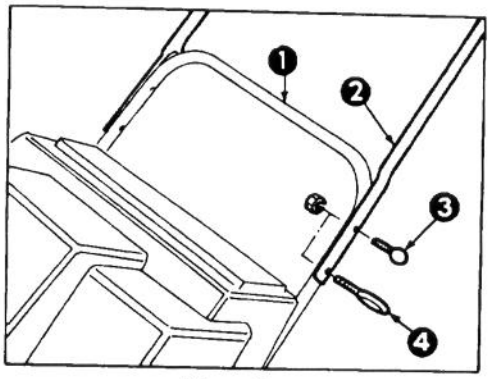

Figure 4

1. Lower Handle *3. Handle Bolt*
2. Upper Handle *4. Eyebolt*

ASSEMBLY INSTRUCTIONS

INSTALL CONTROL CABLE (Fig. 5)

1. Route control cable thru eyebolt and hook upper end in rear hole (hole with arrow) in control bar bracket.

2. Move control bar back toward handle until slack in cable is removed. Gap between control bar bracket and handle should be approximately 1/16-1/8". If an adjustment is required, refer to Adjusting Control Bar, page 7, step 3.

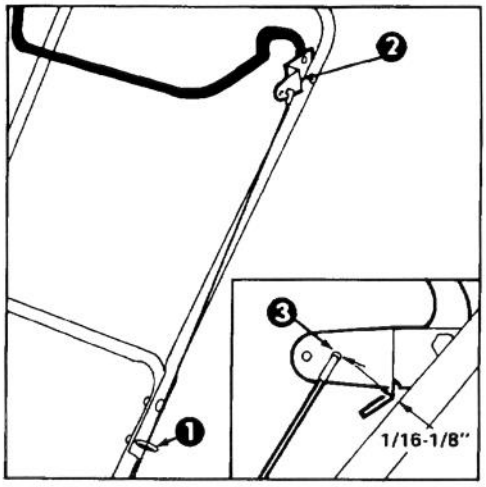

Figure 5

1. Eyebolt
2. Control Bar Bracket
3. Rear Hole

BEFORE OPERATING

DANGER: Gasoline is extremely flammable and explosive under certain conditions. Do not smoke when handling fuel and keep fuel far away from open flames and sparks. Never buy more than a 30 day supply of gasoline and store it in an approved container. Keep gasoline out of reach of children.

Refuel outdoors, only when engine is cold. Fill tank to just below bottom of filler neck, not into filler neck. This space is for expansion of fuel. Use funnel or spout to prevent spilling. Wipe up any spilled gas. Assure area is dry before starting engine.

MIX GASOLINE AND OIL (Fig. 6)

1. APPROVED OIL—This snowthrower engine requires a mixture of unleaded gas and two-cycle oil. Toro two-cycle oil has been thoroughly tested and approved for use in the engine at a 50:1 ratio. Failure to use proper fuel mixture will cause serious engine damage. Since Toro oil is specifically formulated, it has superior lubrication qualities, burns cleaner, promotes easy starts and prolongs engine life.

IMPORTANT: IN AN EMERGENCY, B.I.A. TC-W CERTIFIED OILS MAY BE SUBSTITUTED. NON B.I.A. APPROVED OILS HAVE NOT BEEN APPROVED FOR USE IN TORO PRODUCTS AND MAY VOID THE WARANTY. NEVER USE FOUR-CYCLE AUTOMOTIVE OILS, SUCH AS SAE 30 OR 10 W 30 BECAUSE ENGINE DAMAGE MAY OCCUR.

2. GASOLINE – THE TORO COMPANY STRONGLY RECOMMENDS THE USE OF CLEAN, FRESH UNLEADED REGULAR GASOLINE IN TORO GASOLINE POWERED PRODUCTS. UNLEADED GASOLINE BURNS CLEANER, EXTENDS ENGINE LIFE, AND PROMOTES GOOD STARTING BY REDUCING THE BUILD-UP OF COMBUSTION CHAMBER DEPOSITS. LEADED GASOLINE CAN BE USED IF UNLEADED IS NOT AVAILABLE.

NOTE: NEVER USE METHANOL, GASOLINE CONTAINING METHANOL, GASOHOL CONTAINING MORE THAN 10% ETHANOL, GASOLINE ADDITIVES, PREMIUM GASOLINE, OR WHITE GAS BECAUSE ENGINE FUEL SYSTEM DAMAGE COULD RESULT.

3. MIXING – In an approved gasoline container, thoroughly mix prescribed amount of gasoline and two-cycle oil (refer to Fuel Mixing Chart). DO NOT MIX FUEL IN SNOWTHROWER FUEL TANK. FOR BETTER MIXING, OIL SHOULD BE AT LEAST ROOM TEMPERATURE.

4. Fill Snowthrower fuel tank to just below bottom of filler neck, not into filler neck. Install fuel tank cap securely.

50:1

Fuel Mixing Chart

Toro two-cycle oil is available in easy mix four ounce pouches and eight ounce cans.

U.S. GALLON		IMPERIAL GALLON	
Gasoline	**Oil**	**Gasoline**	**Oil**
1 gallon	2.6 oz.	1 gallon	3 oz.
1½ gallons	4 oz. pouch	1½ gallons	4.5 oz.
2 gallons	5.2 oz.	2 gallons	6 oz.
2½ gallons	6.5 oz.	2½ gallons	7.5 oz.
3 gallons	8 oz. can	3 gallons	9 oz.

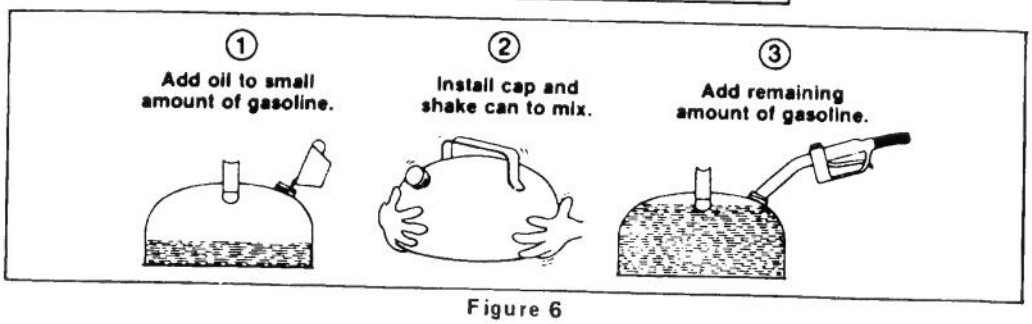

Figure 6

OPERATING INSTRUCTIONS

STARTING/STOPPING ENGINE (Fig. 7)

1. CONTROLS – Key switch, primer, recoil starter and electric start button are located on control panel. Choke is just below control panel.

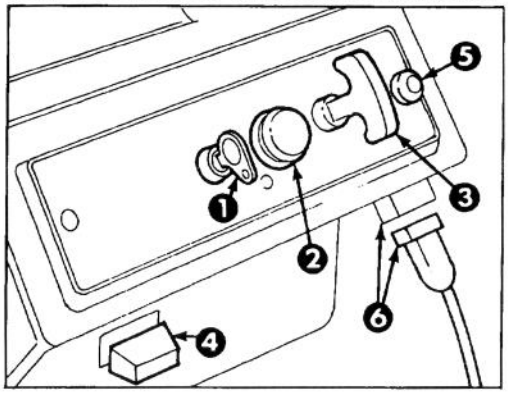

Figure 7

1. Key Switch
2. Primer
3. Recoil Start
4. Choke
*5. Elec. start button**
*6. Cord connection**

*ELEC. START MODEL

2. Turn key to ON and pull choke out.

3. Cover hole in center of primer with thumb and push once. An additional prime may be necessary in extremely cold temperatures.

Note: Choke and primer are usually not necessary when warm engine is being started.

4. ELECTRIC STARTING – Connect extension cord to snowthrower and standard household power outlet. Push starter button.

IMPORTANT: Excessive running of the electric starter could damage the starter due to overheating. To prevent possible damage, do not run electric starter more than 10 times at intervals of 5 seconds 'ON'/5 seconds 'OFF'; then wait 40 minutes before continuing to run starter to allow starter to cool. Before repeating engine starting procedure, check that ignition key switch is 'ON', and that there is fresh fuel in fuel tank. If engine continues to fail to start, servicing may be needed.

5. RECOIL STARTING – Hold snowthrower with one hand and pull recoil starter vigorously with other hand.

6. When engine starts, push in choke slowly.

7. TO ENGAGE ROTOR – Squeeze control bar to handle.

8. TO STOP ENGINE – Release control bar, turn key to OFF and wait for all moving parts to stop before leaving operator's position.

OPERATING TIPS (Fig. 8)

1. ADJUSTING DISCHARGE CHUTE–Rotate chute crank clockwise to move discharge chute to the right and counterclockwise to move chute to the left. Deflector handle on top of discharge chute is used to control the height of the snow stream. Do not over tighten deflector mounting nuts (Fig. 8) so excessive force is required to operate deflector.

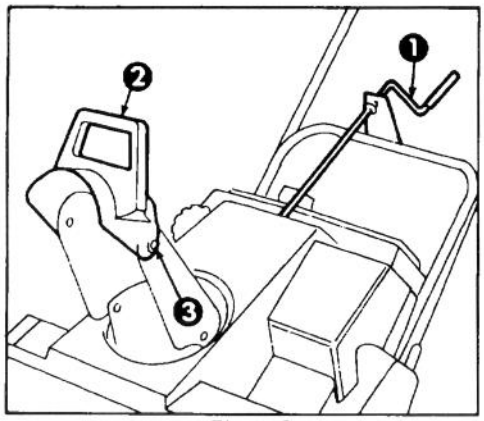

Figure 8

1. Chute Crank
2. Chute Deflector Handle
3. Deflector Mounting Nuts

2. SELF PROPELLING ACTION – Snowthrower will clear down to the ground and propel itself when tilted forward so rotor blades strike the ground. However, depth and height of snow will affect forward speed. Always overlap each swath and discharge downwind when possible.

3. In some snow and cold weather conditions, some controls and moving parts may freeze solid. Therefore, when any control becomes hard to operate, stop the engine; then check all parts for freeze up. DO NOT USE EXCESSIVE FORCE WHEN TRYING TO OPERATE THE CONTROLS IF FROZEN. Free all controls and moving parts before operating.

4. AFTER CLEANING SNOW–Let engine run for a few minutes so ice does not freeze moving parts solid. After engine is shut off, wipe ice and snow off entire unit. Operate chute crank several times to clear mechanism of snow.

IMPORTANT – STORE SNOWTHROWER IN OPERATING POSITION ON ITS WHEELS. TIPPING OR STORING UNIT ON ITS NOSE MAY CAUSE HARD STARTING.

MAINTENANCE

GENERAL MAINTENANCE

Normally, the only maintenance required is cleaning the unit and tightening nuts, bolts, and screws. However, the scraper, drive belt, rotor blades and spark plug should be checked once a year.

ADJUSTING CONTROL BAR (Fig. 9&10)

Periodically check control bar for proper adjustment.

1. Turn ignition key to OFF.

2. CHECK ADJUSTMENT-(Fig. 9) – Move control bar back toward handle until slack in cable is removed. Gap between control bar bracket and handle should be approximately 1/16-1/8". If cable is too loose or too tight proceed to step 3 for adjustment procedure.

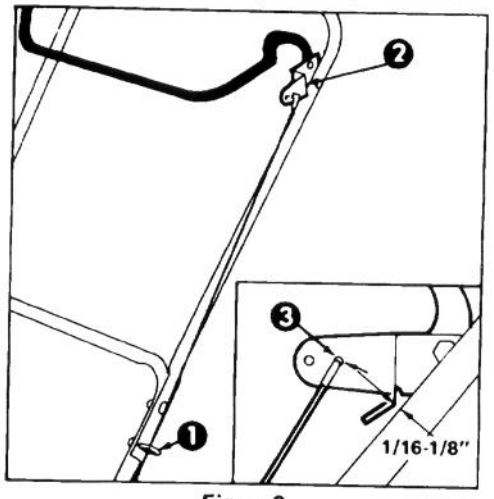

Figure 9

1. Eyebolt *3. Rear Hole*
2. Control Bar Bracket

3. ADJUST CABLE-(Fig. 10) – Unhook upper cable end from hole in control bar bracket. Slide spring cover up cable to expose cable adjuster. Unhook cable end from cable adjuster and reposition in a higher or lower hole on adjuster as required to attain proper gap of 1/16-1/8". Reinstall upper cable end into rear hole (hole with arrow) in control bar bracket. Slide spring cover over cable adjuster and recheck adjustment.

4. After extended use the drive belt may wear and proper belt tension may not be maintained using above procedure. If drive belt slips (continuous squealing noise) under heavy load, belt tension may be increased by repositioning upper cable end into forward hole in control bar bracket and readjusting as instructed in steps 2 and 3.

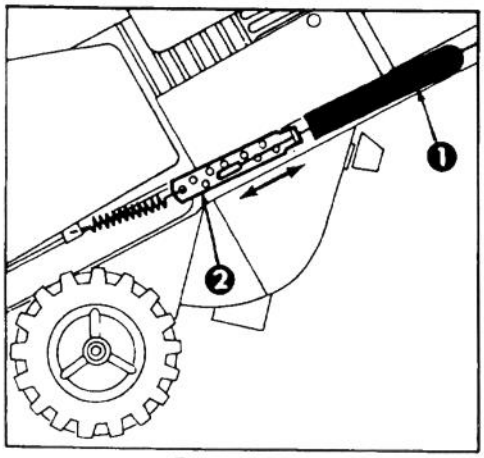

Figure 10

1. Spring Cover *2. Cable Adjuster*

Important: Unnecessary use of forward adjusting hole in control bar bracket will reduce drive belt life. Occasional belt slippage (squealing) may occur in extremely wet conditions. To remove moisture from drive system, engage rotor and operate under no load for a short time.

DRAINING GASOLINE

1. Stop engine. Remove key from switch.

2. Remove cap from fuel tank and use pump-type syphon to drain fuel into clean gas can.

Note: This is the only procedure recommended for draining fuel.

REPLACING SCRAPER (Fig. 11-14)

Before each season, inspect scraper for wear. If thickness of bottom of scraper is less than 1/16"

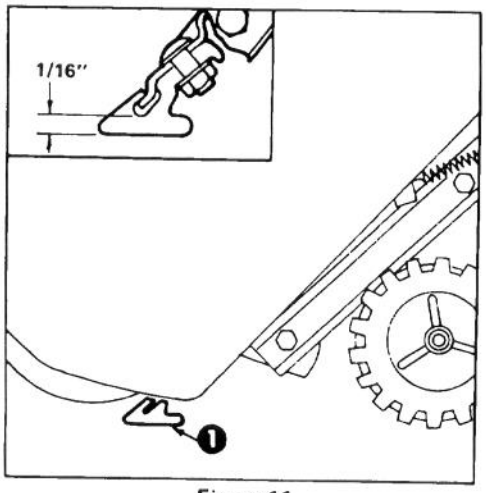

Figure 11

1. Scraper

(1.6 mm), (See Figure 11), replace scraper.

1. Turn ignition key to OFF.

2. Drain gasoline from fuel tank: refer to Draining Gasoline, page 7.

3. Remove (3) self tapping screws, (1) washer and (2) nuts securing belt cover to sideplate (Fig. 12). Set belt cover aside.

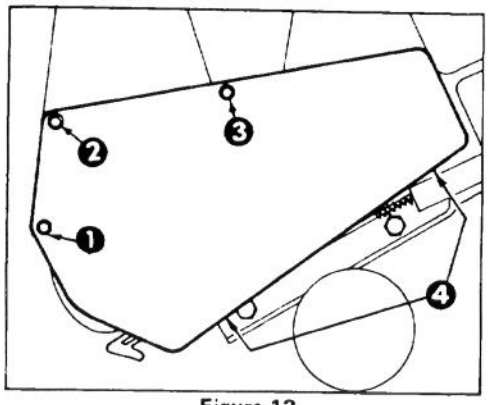

Figure 12

1. Capscrew & Nut
2. Capscrew, Nut & Washer
3. Long Self Tapping Screw
4. Short Self Tapping Screw

4. Remove (2) capscrews and nuts securing lower housing bracket to sideplate (Fig. 13&14).

5. Tip snowthrower up onto its nose. Remove carriage bolts and lock nuts holding scraper in place (Fig. 13). Remove scraper and lower housing bracket.

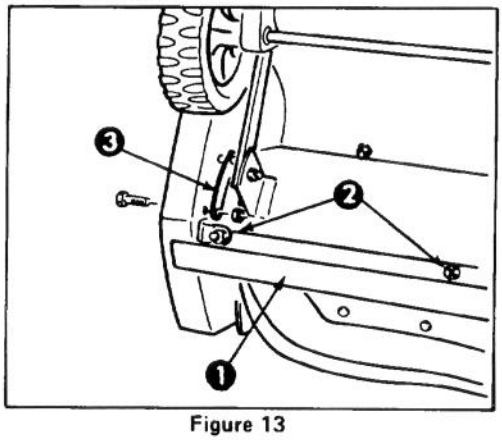

Figure 13

1. Scraper
2. Carriage Bolts & Locknuts
3. Lower Housing Bracket

6. Install new scraper and lower housing bracket to housing with carriage bolts and nuts. Head of bolt to be positioned on inside of housing.

7. Secure lower housing bracket to sideplate with capscrews and nuts.

8. Install belt cover and tighten fasteners securely, but DO NOT OVERTIGHTEN.

REPLACING DRIVE BELT (Fig. 12&14)

Inspect drive belt before each season. If ribs on inside of belt are damaged or belt is worn, replacement is necessary.

1. Turn ignition key to OFF.

2. Remove (3) self tapping screws, (2) capscrews, (1) washer and (2) nuts (Fig. 12) Set belt cover aside.

3. REMOVING BELT (Fig. 14) – Push down on idler pulley allowing belt to be removed from rotor pulley, brake arm assembly and engine pulley.

4. INSTALLING BELT (Fig. 14) – Loop belt around engine pulley, under idler pulley, over roller, thru brake assembly and around rotor pulley.

Important: Belt must be on top of roller as shown.

5. Install belt cover. Tighten fasteners securely but DO NOT OVERTIGHTEN.

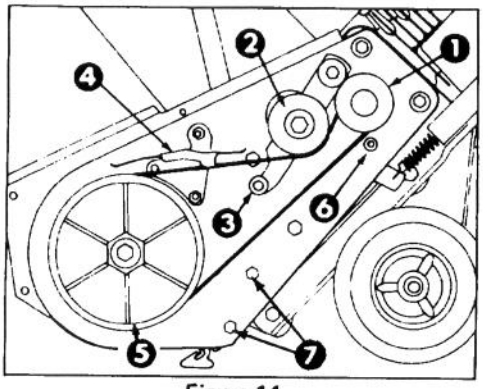

Figure 14

1. Engine Pulley
2. Idler Pulley
3. Roller
4. Brake Assembly
5. Rotor Pulley
6. Belt Guide
7. Capscrew and nuts

REPLACING SPARK PLUG – (Fig. 15,16&17)

Before each snow season, check spark plug. If electrodes in center of plug are dark or have deteriorated, install a new plug. Use a NGK BPMR4A and set gap at .032" (.81 mm).

1. REMOVE CONTROL PANEL (Fig. 15) – Remove (3) capscrews securing control panel to housing. Remove ignition key and lift off panel, allowing it to hang on recoil rope.

MAINTENANCE

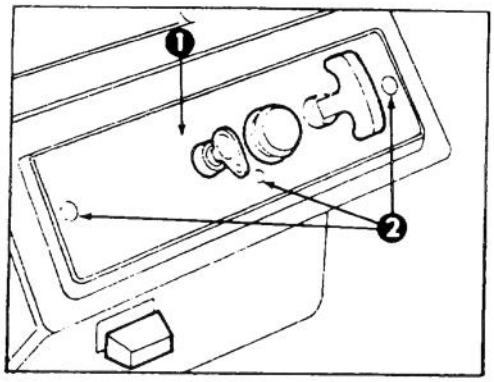

Figure 15
1. Control Panel 2. Mounting Screws

2. REMOVE SPARK PLUG (Fig. 16) – Pull wire off spark plug and remove plug. Examine the plug and replace if cracked, fouled, or

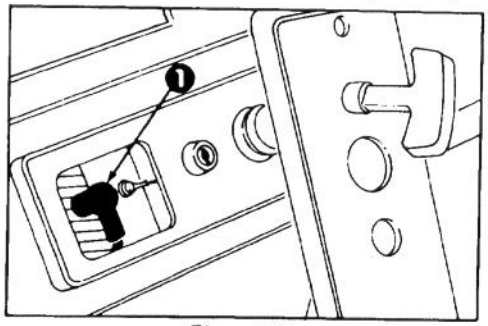

Figure 16
1. Spark Plug Wire

dirty. DO NOT SANDBLAST, SCRAPE OR CLEAN SPARK PLUG BECAUSE DIRT MAY RELEASE AND FALL INTO CYLINDER CAUSING ENGINE DAMAGE.

3. INSTALL SPARK PLUG – Set air gap (Fig. 17) between electrodes at .032" (.81 mm). Install plug and tighten to 15 ft-lb (20.4 N.m). If torque wrench is not used, tighten plug firmly. Push wire onto spark plug and reinstall control panel.

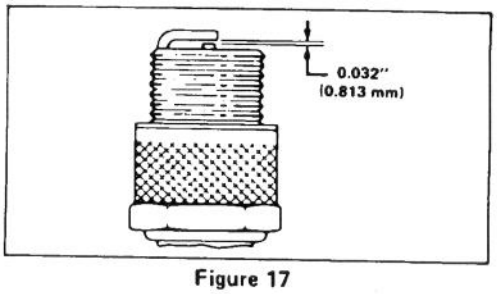

Figure 17

ADJUSTING CARBURETOR

The carburetor has been set at the factory, so no adjustment is required. However, when operating snowthrower at altitudes of 5000 feet above sea level or higher, carburetor jets may have to be changed. Contact your local Authorized Service dealer for assistance.

INSPECTING ROTOR BLADES (Fig. 18)

Before each season, inspect rotor blades for wear. On the front (concave) side of the blade, in the center, measure distance from end of rotor blade to steel rotor. If distance is less than 1-9/16" (39.7mm), blades must be replaced to assure proper performance and avoid damaging underside of snowthrower. See figure 18 for measuring location. Contact your authorized Toro service dealer.

Note: Whenever rotor blades are replaced, scraper should also be replaced to assure proper snowthrower operation and performance.

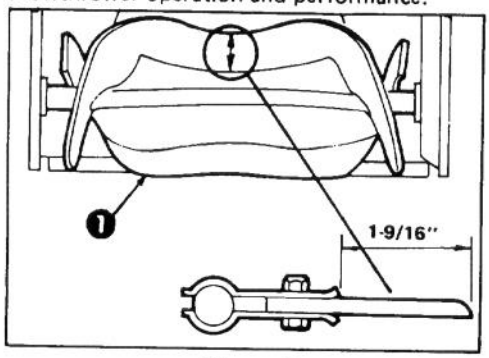

Figure 18
1. Rotor Blade

STORING SNOWTHROWER

1. DRAIN GASOLINE – Refer to Draining Gasoline, page 7.

2. RUN ENGINE DRY – Start engine and let run until it stops because there is no fuel. When engine begins to sputter, pull out choke. If engine does not start, pull recoil starter 5-10 times. IMPORTANT – Draining fuel and letting engine run out of fuel prevents gum-like deposits from forming in the fuel system. If fuel is left in the snowthrower, these deposits will form and cause starting problems next season.

3. CYLINDER/PISTON CARE – Slowly pull recoil starter until resistance is felt due to compression pressure, then stop. Release starter tension slowly to prevent engine from reversing due to compression pressure. This position will close both the intake and exhaust ports to prevent corrosion of cylinder bore.

MAINTENANCE

4. TIGHTEN FASTENERS AND CLEAN. Tighten screws, bolts and nuts if necessary. Repair or replace damaged parts. Clean unit thoroughly.

5. STORE SNOWTHROWER — Cover snowthrower and store in a clean, dry place.

NEVER STORE SNOWTHROWER IN THE HOUSE OR BASEMENT.

PRODUCT IDENTIFICATION

MODEL AND SERIAL NUMBER
A model and serial number decal is located on rear cross member, above axle. Always refer to specific numbers on this decal in correspondence and when replacement parts are needed.

TORO SERVICE SUPPORT

If help — concerning safety, set-up, operation and maintenance or troubleshooting — is ever needed, contact the local Authorized TORO Service Dealer or Distributor. Refer to the "Yellow Pages" for assistance. In addition to skilled service technicians, the dealer and distributor have factory approved accessories and replacement parts. Keep your TORO all TORO. Buy genuine TORO replacement parts and accessories.

MAINTENANCE RECORD

Date	Hours Used					

The Toro Promise

A Two Year Limited Warranty
On All
Gasoline Powered Consumer Products

The Toro Company promises to repair these TORO Products if defective in materials or workmanship. The following time periods from the date of purchase apply:

Residential Product	2 Years
Residential Products Used Commercially . . .	45 Days

The costs of parts and labor are included, but the customer pays the transportation costs. Just return any residential product to an Authorized TORO Service Dealer or TORO Distributor.

Should you feel your TORO is defective and wish to rely on The Toro Promise, the following procedure is recommended:

1. Contact any Authorized TORO Service Dealer, TORO Master Service Dealer, or TORO Distributor (the Yellow Pages of your telephone directory is a good reference source).
2. He will either instruct you to return the product to him or recommend another Authorized TORO Service outlet which might be more convenient.
3. Bring the product along with your original sales slip, or other evidence of purchase date, to the service dealer.
4. The servicing dealer will inspect the unit, advise you whether the product is defective and, if so, make all repairs necessary to correct the defect without extra charge to you.

If for any reason you are dissatisfied with the dealer's analysis of the defect or the service performed, you may contact us.

Write:

TORO Customer Service Department
8111 Lyndale Avenue South
Minneapolis, Minnesota 55420

The above remedy of product defects through repair by an Authorized TORO Service Dealer is the purchaser's sole remedy for any defect.

THERE IS NO OTHER EXPRESS WARRANTY. ALL IMPLIED WARRANTIES OF MERCHANTABILITY AND FITNESS FOR USE ARE LIMITED TO THE DURATION OF THE EXPRESS WARRANTY.

Some states do not allow limitations on how long implied warranty lasts, so the above limitation may not apply to you.

This Warranty applies only to parts or components which are defective and does not cover repairs necessary due to normal wear, misuse, accidents, or lack of proper maintenance. Regular, routine maintenance of the unit to keep it in proper operating condition is the responsibility of the owner.

All warranty repairs reimbursable under The Toro Promise must be performed by an Authorized TORO Service Dealer using Toro approved replacement parts.

Repairs or attempted repairs by anyone other than an Authorized TORO Service Account are not reimbursable under The Toro Promise. In addition, these unauthorized repair attempts may result in additional malfunctions, the correction of which is not covered by warranty.

THE TORO COMPANY IS NOT LIABLE FOR INDIRECT, INCIDENTAL OR CONSEQUENTIAL DAMAGES IN CONNECTION WITH THE USE OF THE PRODUCT INCLUDING ANY COST OR EXPENSE OF PROVIDING SUBSTITUTE EQUIPMENT OR SERVICE DURING PERIODS OF MALFUNCTION OR NON-USE.

Some states do not allow the exclusion of incidental or consequential damages, so the above exclusion may not apply to you.

This warranty gives you specific legal rights, and you may also have other rights which vary from state to state.

COUNTRIES OTHER THAN THE UNITED STATES OR CANADA

Customers who have purchased TORO products exported from the United States or Canada should contact their TORO Distributor (Dealer) to obtain guarantee policies for your country, province or state. If for any reason you are dissatisfied with your Distributor's service or have difficulty obtaining guarantee information, contact the TORO importer. If all other remedies fail, you may contact us at The Toro Company.

Compliance with Radio Interference Regulations Certified.
Certifie Conforme au Reglement sur le Brouillage Radioelectrique.

Printed in U.S.A.