FORM NO. 3313-241 Rev. A

TORO®

MODEL NO. 38116-8000001
thru 9000001 & UP

OPERATOR'S MANUAL

TORO CR-20 SNOWTHROWER

SAFETY INSTRUCTIONS

This safety alert symbol means CAUTION — PERSONAL SAFETY INSTRUCTION. Read the instruction because it has to do with safety. Failure to comply with the instruction may result in personal injury.

The Snowthrower is designed and tested to offer safe and effective service, provided it is operated in strict accordance with the following Safety Instructions. Failure to comply with the following instructions MAY RESULT IN PERSONAL INJURY.

BEFORE OPERATING

1. Never allow children to operate the snowthrower. Adults should operate the snowthrower only after reading this manual. Read this manual carefully.

2. Be thoroughly familiar with controls and proper use of the unit. Know how to stop engine and snowthrower quickly.

3. Keep everyone, especially children and pets, away from area of operation. Thoroughly inspect area where snowthrower will be used. Remove all doormats, sleds, boards, wires and other foreign objects which might be picked up and thrown.

4. Wear adequate winter clothing and footwear which will improve footing on slippery surfaces. Exercise caution to avoid slipping or falling.

5. Since fuel is highly flammable, handle it carefully.

   A. Use an approved fuel container.

   B. Fill fuel tank outdoors, not indoors. Never add fuel to an engine that is running or hot.

   C. Install gas cap on fuel container and gas tank, and wipe up spilled gasoline before starting engine.

6. Keep all guards, shields and safety devices in place. If a guard, shield or safety device is defective, repair before operating. Keep all nuts, bolts and screws tight.

OPERATING

7. Use only the extension cord provided with the CR-20 Electric Start Model. Do not plug extension cord into outlet while standing in water or when hands are wet. Do not use cord if gasoline has been spilled. Replace damaged extension cord immediately.

8. Allow engine to warm up outdoors for about two minutes. Do not run engine indoors.

9. Never operate snowthrower without good visibility or light. Always maintain secure footing and keep a firm grip on the handles. Walk; never run. DO NOT USE SNOWTHROWER ON ROOF.

10. Keep face, hands, feet and any other part of your body or clothing away from concealed, moving or rotating parts. ALWAYS STAY CLEAR OF DISCHARGE AREA.

11. Use extreme caution when operating on or crossing gravel drives, walks or roads. Stay alert for hidden hazards or traffic.

12. Never direct discharge toward or operate snowthrower near glass enclosures, motor vehicles, window wells or drop-offs.

13. Never direct discharge at bystanders or allow anyone in front of the snowthrower.

14. Never clear snow off steep slopes or across the faces of slopes. Exercise extreme caution when changing direction on slopes.

15. Do not overload snowthrower by clearing snow at too fast a rate.

16. After striking a foreign object or if snowthrower vibrates abnormally, stop engine by turning key to OFF. Thoroughly inspect snowthrower for any damage, obstruction or loose parts. Repair damage before restarting and operating.

17. Whenever you leave the operating position, stop engine by turning key to OFF. Remove key from switch if unit will be unattended.

18. Before inspecting, adjusting, repairing or clearing snowthrower, stop engine by turning key to OFF. Always wait for all moving parts to stop. Do not make adjustments while engine is running.

19. After clearing snow, let engine run for a few minutes so moving parts do not freeze.

SAFETY INSTRUCTIONS

MAINTENANCE AND STORAGE

20. REMOVE KEY FROM SWITCH when storing snowthrower. Store key in memorable place.

21. Never store snowthrower with fuel in the fuel tank inside a building where open flame or sparks are present. Allow engine to cool before storing. Never store snowthrower in house (living area) or basement because gasoline and fumes are highly flammable, explosive and dangerous if inhaled.

22. Keep all nuts, bolts and screws tight to assure snowthrower is in proper working condition.

23. Perform maintenance and use storage instructions described in this manual. Re-install fuel tank cap whenever upper shroud is removed for maintenance.

24. ALWAYS USE GENUINE TORO REPLACEMENT PARTS AND ACCESSORIES TO ASSURE SAFETY AND OPTIMUM PERFORMANCE. NEVER USE "WILL-FIT" PARTS AND ACCESSORIES.

PRODUCT IDENTIFICATION

MODEL AND SERIAL NUMBER

A model and serial number decal is on the right side of the rotor housing, ahead of the right wheel. Always refer to specific numbers on this decal in correspondence and when replacement parts are needed.

ASSEMBLY INSTRUCTIONS

INSTALL WHEELS (Fig. 1)

1. Place push nut on hard, flat surface and insert end of axle into push nut. Using hammer, strike opposite end of axle so nut seats firmly in place.

2. Slide wheel onto axle. Side of wheel with six spokes must face center of axle. Slide washer onto axle.

3. Slide axle through both brackets. Next, tip unit onto installed wheel and put wood block under push nut. Slide washer and wheel onto open end of axle. Using hammer, drive push nut onto axle.

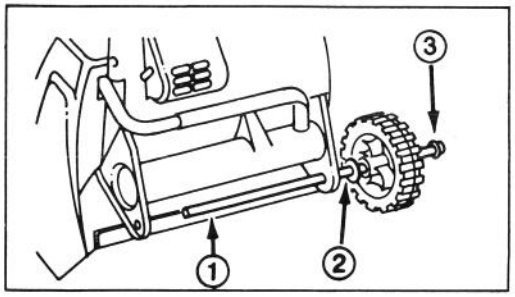

Fig. 1

1. Axle 2. Washer 3. Push Nut

INSTALL UPPER HANDLE (Fig. 2)

1. Slide upper handle between lower handle and shroud. Look through holes in shroud and align holes in upper and lower handles.

2. Secure both sides of handle with four machine screws.

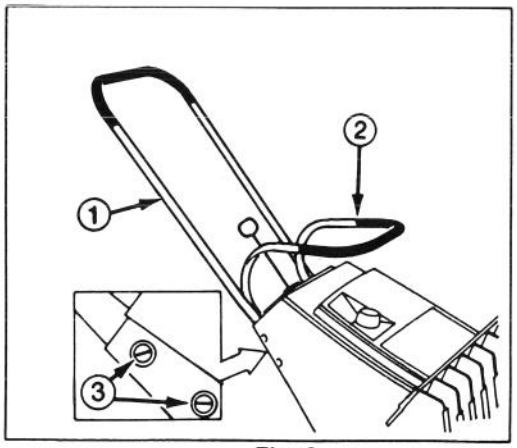

Fig. 2

1. Upper handle 3. Screws
2. Lower handle

BEFORE OPERATING

⚠ DANGER: Gasoline is extremely flammable and explosive under certain conditions. Do not smoke when handling fuel and keep fuel far away from open flames and sparks. Never buy more than a 30 day supply of gasoline and store it in an approved container. Keep gasoline out of reach of children.

Refuel outdoors, only when engine is cold. Fill tank to within 1/4" to 1/2" (6 to 13 mm) from its top. This space is for expansion of fuel. Use funnel or spout to prevent spilling. Wipe up any spilled gas. Assure area is dry before starting engine.

MIX GASOLINE AND OIL (Fig. 3)

This product uses a two-cycle engine which requires a mixture of gasoline and two-cycle oil (32:1 gas/oil ratio). Failure to use proper fuel mixture will cause serious engine damage.

1. OIL—Your local TORO dealer has TORO 2-cycle oil available in convenient easy mix pouches (one pouch per gallon of gas) or 8 oz. cans (one can per 2 gallons of gas). TORO 2-cycle oil is specially formulated and tested to promote quick starts, prolong engine life and increase performance. B.I.A. TC-W certified 2-cycle oils may be substituted. NEVER USE 2-CYCLE OILS WITHOUT THE B.I.A. TC-W CERTIFICATION LABEL OR 4-CYCLE AUTOMOTIVE OILS SUCH AS SAE 30 OR 10W30. ENGINE DAMAGE MAY OCCUR.

2. GASOLINE — THE TORO COMPANY STRONGLY RECOMMENDS THE USE OF CLEAN, FRESH **UNLEADED** REGULAR GASOLINE IN TORO GASOLINE POWERED PRODUCTS. UNLEADED GASOLINE BURNS CLEANER, EXTENDS ENGINE LIFE, AND PROMOTES GOOD STARTING BY REDUCING THE BUILD-UP OF COMBUSTION CHAMBER DEPOSITS. LEADED GASOLINE CAN BE USED IF UNLEADED IS NOT AVAILABLE.

NOTE: NEVER USE METHANOL, GASOLINE CONTAINING METHANOL, GASOHOL CONTAINING MORE THAN 10% ETHANOL, GASOLINE ADDITIVES, PREMIUM GASOLINE, OR WHITE GAS BECAUSE ENGINE FUEL SYSTEM DAMAGE COULD RESULT.

3. MIXING — In an approved gasoline container, thoroughly mix prescribed amount of gasoline and two-cycle oil (refer to Fuel Mixing Chart). DO NOT MIX FUEL IN SNOWTHROWER FUEL TANK. FOR BETTER MIXING, OIL SHOULD BE AT ROOM TEMPERATURE.

4. Fill snowthrower fuel tank to within 1/4" to 1/2" (6 to 13 mm) from top of tank, not the filler neck. Install fuel tank cap securely.

32:1
Fuel Mixing Chart

Unit of Measure	Gasoline	Oil
U.S. Gallon	1 gallon	4 oz pouch
U.S. Gallon	2 gallons	8 oz can
Imperial Gallon	1 gallon	5 oz.
Liter	1 litre	32 ml

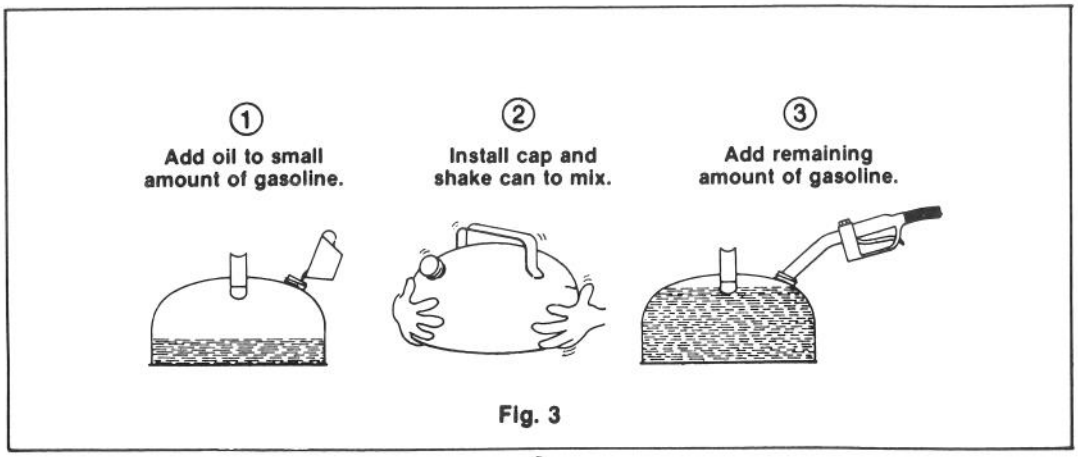

Fig. 3

OPERATING INSTRUCTIONS

STARTING/STOPPING ENGINE (Fig. 4)

1. CONTROLS — All controls are mounted on the control panel. They consist of a primer, ignition switch, recoil starter, choke and electric start button.

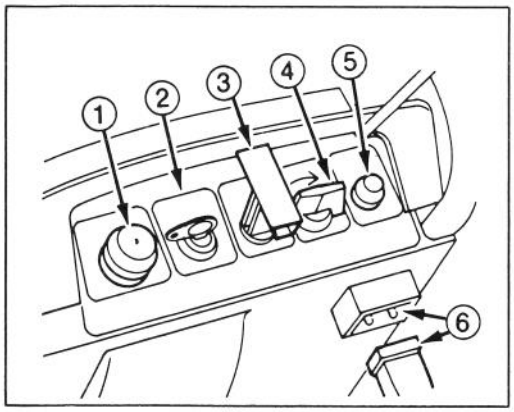

Fig. 4

1. Primer
2. Key switch
3. Recoil starter
4. Choke
*5. Elec. start button**
*6. Cord connection**
* ELEC. START MODEL

2. Slowly pull recoil rope to assure rotor paddles turn.

3. Turn key to ON and rotate choke clockwise, even when starting hot engine.

4. Cover hole in center of primer with thumb and push one or two times at temperatures above 0°F (-18°C), and two or three times at 0°F (-18°C) or below. More primes may be necessary in extremely cold temperatures. DO NOT PRIME IF ENGINE HAS BEEN RUNNING AND IS HOT.

NOTE: When starting engine for the first time or after running out of fuel, more priming will be required to start engine.

5. ELECTRIC STARTING — Connect extension cord to snowthrower and standard household power outlet. Push starter button. If engine does not start within 10 seconds, prime engine again and repeat starting procedure.

IMPORTANT: Do not run starter motor more than 30 seconds without cooling for 3 minutes.

6. RECOIL STARTING — Hold snowthrower with one hand and pull recoil starter vigorously with other hand. If engine does not start after four pulls, prime engine again and repeat starting procedure.

7. When engine starts, rotate choke counterclockwise after a few seconds of running time. If engine begins to stall, regulate choke accordingly.

8. TO STOP ENGINE — Turn key to OFF and wait for all moving parts to stop before leaving operator's position.

OPERATING TIPS

1. ADJUSTING VANES (Fig. 5) — Keep vanes in vertical position for most efficient snow throwing. However, snow can be discharged left or right by simply rotating vane control. Store snowthrower with vanes in vertical position.

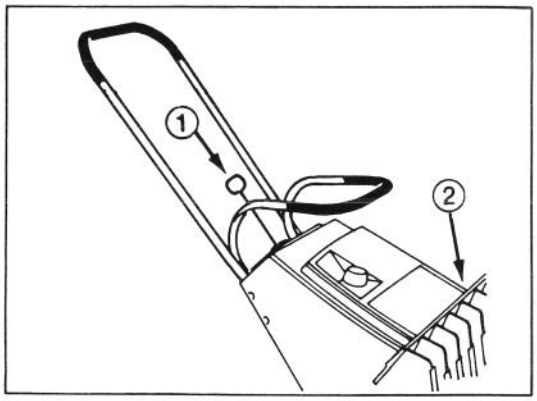

Fig. 5

1. Vane control *2. Vanes*

2. SELF-PROPELLING ACTION — Snowthrower will clear down to the ground and propel itself when tilted forward so rotor blades strike the ground. However, depth and weight of snow will affect forward speed. Always overlap each swath and discharge snow downwind when possible.

3. ON STEPS OR CUTTING THROUGH DRIFTS — Standing on right side, hold snowthrower by upper and lower handles and use side to side sweeping motion.

⚠ CAUTION: When operating snowthrower, exhaust tube and muffler are hot and could cause damage to clothing or personal injury.

4. AFTER CLEARING SNOW — Let engine run for a few minutes so ice does not freeze moving parts solid. After engine is shut off, pull recoil starter and crank electric starter (if so equipped) once to propel any moisture off internal recoil and starter components. Wipe ice and snow off entire unit.

MAINTENANCE

GENERAL MAINTENANCE

Normally, the only maintenance required is cleaning the unit and tightening nuts, bolts and screws. However, the scraper, drive belt, rotor blades and spark plug should be checked once a year.

REPLACING SCRAPER (Fig. 6 & 7)

Before each season, inspect scraper for wear. If distance from back to front of scraper blade is less than 1-3/8" (35 mm) (Fig. 6), replace scraper.

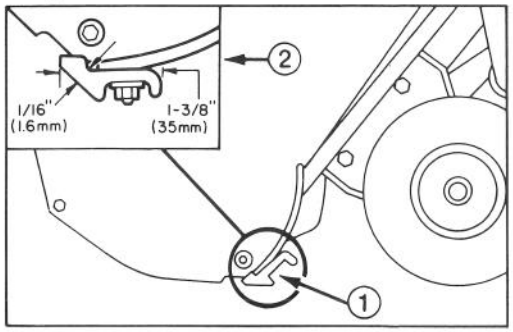

Fig. 6

1. Scraper 2. Critical measurement

1. Drain fuel from fuel tank. (Fig. 16).
2. Tip snowthrower on its side. Remove locknuts and carriage bolts holding scraper in place (Fig. 7). Remove scraper from housing.

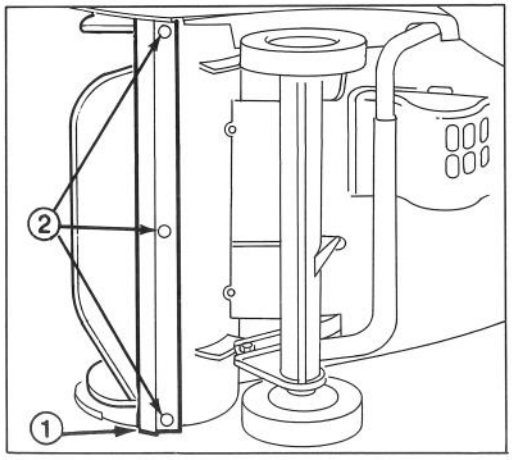

Fig. 7

1. Scraper 2. Bolts and locknuts

3. Slide new scraper onto housing and secure with three carriage bolts and locknuts. Do not over-tighten because nut will pull through scraper. Head of bolt must be on inside of housing.

REPLACING DRIVE BELT (Fig. 8, 9 & 10)

Inspect drive belt before each season. If ribs on inside of belt are damaged or belt is worn, replacement is necessary.

1. Turn ignition key to OFF.
2. Remove screws, locknuts and washer faced capscrew (Fig. 8). Set belt cover aside.

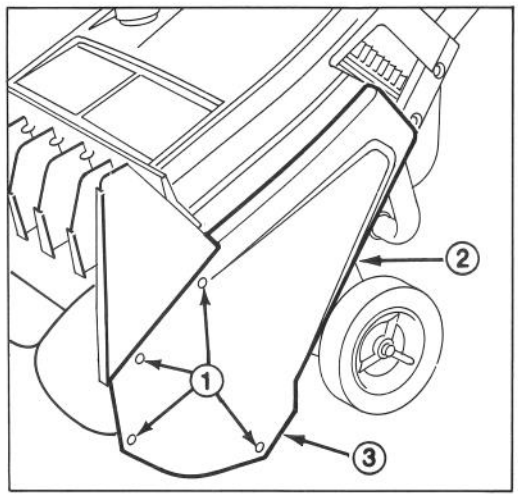

Fig. 8

1. Screws and locknuts 3. Belt cover
2. Capscrew

3. REMOVING BELT (Fig. 9) — Pull idler pulley up slightly while pulling out on belt. Allow pulley to gradually release when it can move past the belt. DO NOT LET IDLER PULLEY SNAP. Remove belt from engine and rotor pulleys.

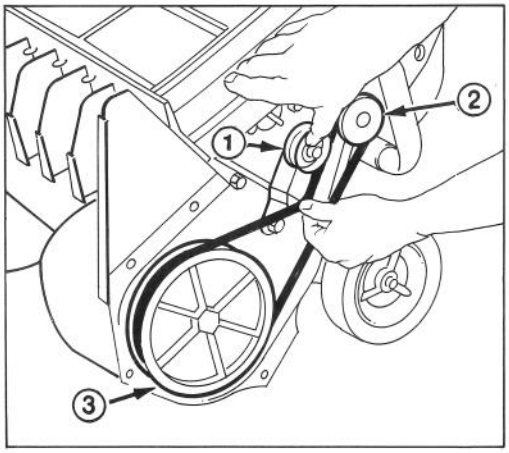

Fig. 9

1. Idler 3. Rotor pulley
2. Engine pulley

MAINTENANCE

4. INSTALLING BELT (Fig. 10) — Loop belt around engine pulley, under idler pulley and start belt around rotor pulley. Pull idler pulley up and rotate rotor pulley forward until belt fits into pulley.

5. Install belt cover.

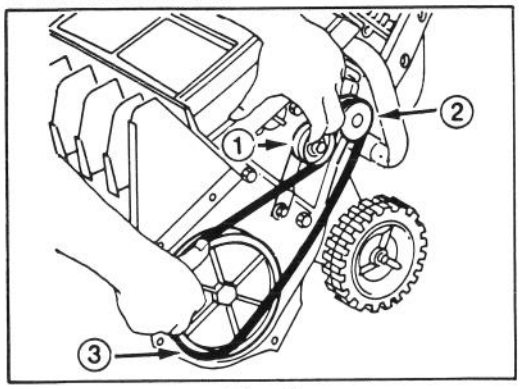

Fig. 10

1. Idler
2. Engine pulley
3. Rotor pulley

REPLACING SPARK PLUG (Fig. 11, 12 & 13)

Before each snow season, check spark plug. If electrodes in center of plug are dark or have deteriorated, install new plug. Use a Champion RCJ8Y and set gap at .030" (.76 mm).

1. REMOVE SHROUD — Remove three screws at front housing (Fig. 11) and two self-tapping screws holding both sides of upper shroud (Fig. 2). Remove fuel tank cap and lift off shroud. Reinstall fuel tank cap.

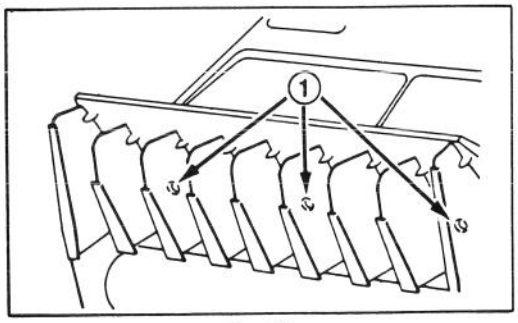

Fig. 11

1. 3/4" (44 mm) Long Screws

2. REMOVE SPARK PLUG (Fig. 12) — Pull high tension wire off spark plug and remove plug. Examine the plug and replace if cracked, fouled or dirty. DO NOT SANDBLAST, SCRAPE OR CLEAN SPARK PLUG BECAUSE DIRT MAY RELEASE AND FALL INTO CYLINDER CAUSING ENGINE DAMAGE.

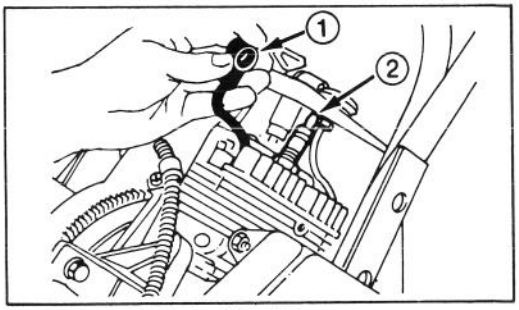

Fig. 12

1. High tension wire
2. Spark plug

3. INSTALL SPARK PLUG — Set air gap (Fig. 13) between electrodes at .030" (.76 mm). Install plug and tighten to 15 ft-lb (20.4N-m). If torque wrench is not used, tighten plug firmly. Push high tension wire onto spark plug.

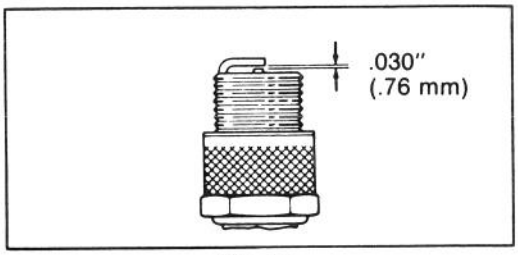

Fig. 13

4. Remove fuel tank cap and install upper shroud. Assure top of control panel fits into groove in shroud. Use 3/4" (19 mm) long screws at front of housing and 1/2" (13 mm) screws to hold sides of upper shroud.

INSPECTING ROTOR BLADES (Fig. 14)

Before each season, inspect rotor blades for wear. On the front (concave) side of the blade, in the center, measure distance from end of

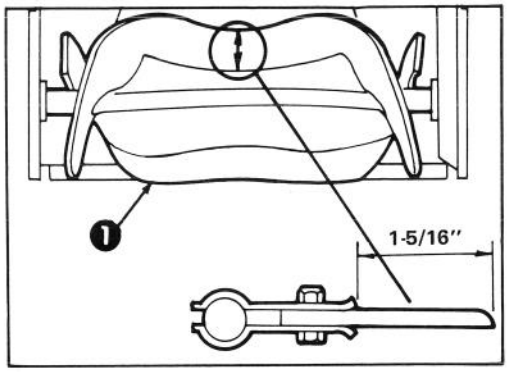

Figure 14

1. Rotor Blade

rotor blade to steel rotor. If distance is less than 1-5/16" (33 mm), blades must be replaced to assure proper performance and avoid damaging underside of snowthrower. See figure 14 for measuring location. Contact your authorized Toro service dealer.

Note: Whenever rotor blades are replaced, scraper should also be replaced to assure proper snowthrower operation and performance.

ADJUSTING CARBURETOR (Fig. 15)

The carburetor has been adjusted at the factory, but an adjustment may be required to compensate for differences in fuel, temperature and altitude.

1. INITIAL SETTING — Proper setting for Power Adjusting Screw is 5/8-3/4 turn open, and 7/8 turn open for Idle Adjusting Screw. These settings should allow engine to be started. To adjust screws, gently rotate screw in (clockwise) until slight seating resistance is felt. DO NOT TIGHTEN SCREWS BECAUSE CARBURETOR WILL BE DAMAGED. Then rotate screw out (counter-clockwise) to the prescribed setting.

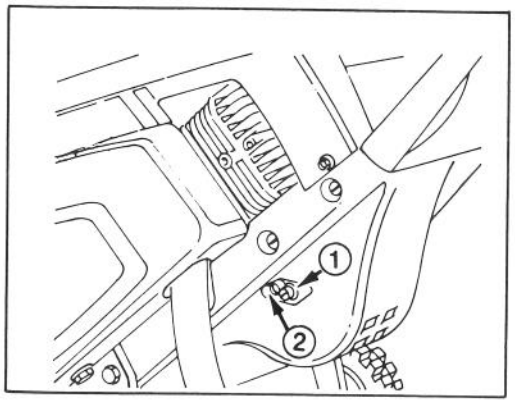

Fig. 15

1. Power screw 2. Idle screw

2. FINE TUNING — Start engine and let it run for 3-5 minutes, then begin throwing snow. If snow can be thrown without engine stalling, carburetor is properly adjusted. If engine tends to stall, shut engine off and open Power Adjusting Screw an additional 1/8 turn. Restart engine and test snow throwing power again. Continue to open Power Adjusting Screw 1/8 turn at a time until stalling is eliminated.

STORING SNOWTHROWER

1. DRAIN GASOLINE (Fig. 16) — Remove fuel tank cap from snowthrower. Carefully tip unit forward and allow fuel to drain into a wide pan. Tip unit upright and install fuel tank cap. Wipe up any spilled fuel and store fuel in approved container.

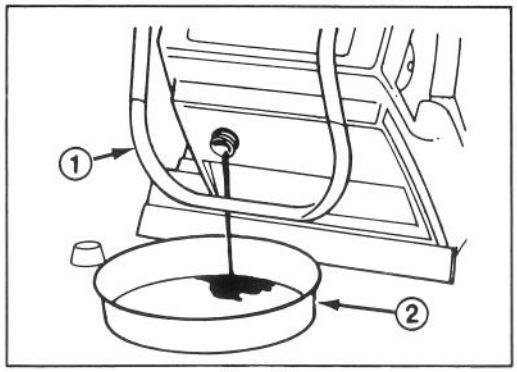

Fig. 16

1. Snowthrower tipped forward
2. Wide pan

2. RUN ENGINE DRY — Start engine and let run until it stops because there is no fuel. When engine begins to sputter, rotate choke clockwise. If engine does not start, pull recoil starter 5-10 times. IMPORTANT — Draining fuel and letting engine run out of fuel prevents gum-like deposits from forming in the fuel system. If fuel is left in the snowthrower, these deposits will form and cause starting problems next season.

3. CYLINDER/PISTON CARE — Slowly pull recoil starter until resistance is felt due to compression pressure, then stop. Release starter tension slowly to prevent engine from reversing due to compression pressure. This position will close both the intake and exhaust ports to prevent corrosion of piston and cylinder bore.

4. TIGHTEN FASTENERS AND CLEAN. Tighten screws, bolts and nuts. Repair or replace damaged parts. Clean unit thoroughly.

5. STORE SNOWTHROWER — Cover snowthrower and store in a clean, dry place. Unit may be hung on garage wall. Keep CR-20 Electric Start extension cord with the unit. NEVER STORE SNOWTHROWER IN THE HOUSE OR BASEMENT.

The Toro Promise

A Two Year Limited Warranty
On All
Gasoline Powered Consumer Products

The Toro Company promises to repair these TORO Products if defective in materials or workmanship. The following time periods from the date of purchase apply:

Residential Product . . . . . 2 Years
Residential Products Used Commercially . . . 45 Days

The costs of parts and labor are included, but the customer pays the transportation costs. Just return any residential product to an Authorized TORO Service Dealer or TORO Distributor.

Should you feel your TORO is defective and wish to rely on The Toro Promise, the following procedure is recommended:

1. Contact any Authorized TORO Service Dealer, TORO Master Service Dealer, or TORO Distributor (the Yellow Pages of your telephone directory is a good reference source).
2. He will either instruct you to return the product to him or recommend another Authorized TORO Service outlet which might be more convenient.
3. Bring the product along with your original sales slip, or other evidence of purchase date, to the service dealer.
4. The servicing dealer will inspect the unit, advise you whether the product is defective and, if so, make all repairs necessary to correct the defect without extra charge to you.

If for any reason you are dissatisfied with the dealer's analysis of the defect or the service performed, you may contact us.

Write:

TORO Customer Service Department
8111 Lyndale Avenue South
Minneapolis, Minnesota 55420

The above remedy of product defects through repair by an Authorized TORO Service Dealer is the purchaser's sole remedy for any defect.

THERE IS NO OTHER EXPRESS WARRANTY. ALL IMPLIED WARRANTIES OF MERCHANTABILITY AND FITNESS FOR USE ARE LIMITED TO THE DURATION OF THE EXPRESS WARRANTY.

Some states do not allow limitation on how long implied warranty lasts, so the above limitation may not apply to you.

This Warranty applies only to parts or components which are defective and does not cover repairs necessary due to normal wear, misuse, accidents, or lack of proper maintenance. Regular, routine maintenance of the unit to keep it in proper operating condition is the responsibility of the owner.

All warranty repairs reimbursable under The Toro Promise must be performed by an Authorized TORO Service Dealer using Toro approved replacement parts.

Repairs or attempted repairs by anyone other than an Authorized TORO Service Account are not reimbursable under The Toro Promise. In addition, these unauthorized repair attempts may result in additional malfunctions, the correction of which is not covered by warranty.

The Toro Company is not liable for indirect, incidental or consequential damages in connection with the use of the product including any cost or expense of providing substitute equipment or service during periods of malfunction or non-use.

Some states do not allow the exclusion of incidental or consequential damages, so the above exclusion may not apply to you.

This warranty gives you specific legal rights, and you may also have other rights which vary from state to state.

COUNTRIES OTHER THAN THE UNITED STATES OR CANADA

Customers who have purchased TORO products exported from the United States or Canada should contact their TORO Distributor (Dealer) to obtain guarantee policies for your country, province or state. If for any reason you are dissatisfied with your Distributor's service or have difficulty obtaining guarantee information, contact the TORO importer. If all other remedies fail, you may contact us at The Toro Company.

Compliance with Radio Interference Regulations Certified.
Certifie Conforme au Reglement sur le Brouillage Radioelectrique.

©The Toro Company — 1988

Printed in U.S.A.