FORM NO. 3313-311

TORO

MODEL NO. 20584 - 8000001 & UP
MODEL NO. 20684 - 8000001 & UP

OPERATOR'S MANUAL

21" (0.53 m) SP REAR BAGGER

⚠ SAFETY INSTRUCTIONS

This mower "meets or exceeds CPSC blade safety requirements for walk behind rotary mowers," and the B71.1-1986 specifications of the American National Standards Institute. However, improper use or maintenance by the operator or owner can result in injury. To reduce the potential for injury, comply with these safety instructions and always pay attention to the safety alert symbol. Failure to comply with the instruction may result in personal injury.

BEFORE OPERATING

1. Read this manual carefully before operating the mower. Become familiar with the controls and proper use of the mower. Never allow children to operate the mower or adults to operate it without proper instructions.
2. Keep everyone, especially children and pets, away from the area of operation. Thoroughly inspect area where mower will be used and remove sticks, stones, wire and debris.
3. Wear long pants and substantial shoes. Do not operate mower while wearing open sandals or when barefoot.
4. Check fuel level before starting engine. Do not fill fuel tank indoors, when the engine is running, or until engine cools for several minutes after running. Wipe up spilled gasoline before starting engine.
5. Keep all guards, shields and safety devices in place. Repair or replace defective or damaged parts.
6. Engine, blade and traction drive are designed to stop when control bar is released. Assure control and brake function properly before each use of mower.

WHILE OPERATING

7. Do not run engine indoors.
8. Always maintain secure footing. Keep a firm grip on the handle and walk; never run. Never operate mower in wet grass. Mow only in daylight or in good artificial light.
9. Mow across the face of slopes; never up and down. Use extreme caution when changing direction on slopes. Do not mow excessively steep slopes.
10. Keep face, hands and feet away from the mower housing and cutter blade when the engine is running. Stay behind the handle until the engine stops and keep clear of discharge opening at all times.
11. When mulching, keep grass bag in place and assure chute door is closed. When bagging grass, stop engine and assure chute door is closed before the bag is removed and emptied.
12. Shut engine off and wait for all moving parts to stop before unclogging chute.
13. Since the blade rotates for a few seconds after the blade control is released, stay behind the handle until all moving parts stop.
14. After striking a foreign object or if mower vibrates abnormally, stop engine and remove wire from spark plug. Check mower for damage and make all repairs before using mower again.
15. Stop the engine before adjusting the height-of-cut.
16. Stop the blade when crossing a gravel driveway, road or sidewalk.
17. Stop engine before leaving the operator's position — behind the handle. Disconnect wire from spark plug if mower will be unattended.
18. Do not touch engine while it is running or shortly after it is stopped because engine will be hot enough to cause a burn.

MAINTENANCE

19. Perform only those maintenance instructions described in this manual. If major repairs

ONLY COPY
DO NOT REMOVE
BEST COPY AVAILABLE
Tech. Publications

⚠ SAFETY INSTRUCTIONS

are ever needed or if assistance is desired, contact an Authorized TORO Service Dealer.

20. Before mower is cleaned, inspected, serviced or adjusted, stop engine and disconnect high tension wire from spark plug. Keep wire away from plug to prevent accidental starting.

21. To assure the mower is in safe operating condition, frequently check and keep all nuts, bolts and screws tight. Assure blade bolt is tightened to 15-26 ft-lb (20-35 N·m).

22. To reduce fire hazard, keep engine free of excessive grease, grass, leaves and accumulations of dirt.

23. Check grass catcher bag frequently for wear or deterioration. Replace with a new bag for your protection.

24. Allow engine to cool before storing mower in any enclosure. Do not store mower near any open flame or where gasoline fumes may be ignited by a spark.

25. Do not overspeed the engine by changing governor settings.

26. At the time of manufacture the mower conformed to the safety standards in effect for rotary mowers. To assure optimum performance and continued safety certification of the mower, use genuine TORO replacement parts and accessories. Replacement parts and accessories made by other manufacturers may result in non-conformance with the safety standards, and that could be dangerous.

SAFETY DECALS



Safety decals and instructions are easily visible to the operator and are located near any area of potential danger. Replace any decal that is damaged.



ON CONTROL PANEL
(Part No. 49-3060) MODEL 20684
(Part No. 49-3070) MODEL 20584

ON MOWER HOUSING
(Part No. 43-8480)



TABLE OF CONTENTS

	Page
Set-Up Instructions	3
Install Handle	3
Assemble Bag to Mower	3
Fuel Mixing Instructions	4
Mix Gasoline and Oil	4
Operating Instructions	5-8
Adjust Height-of-Cut	5
Starting/Stopping the Engine	5
Mower Operation	5
Operating Characteristics and Tips	6
Cutting Tips	6
Bagging	6
Mowing Without Bagging	7
Maintenance	8-12
Lubricating Axle Pivots	8
Servicing Air Cleaner	8
Replacing Spark Plug	9
Draining Gasoline	9
Inspecting, Sharpening or Replacing Cutter Blade	9
Clean Mower Housing	10
Installing Ground Speed Control	10
Adjusting Ground Speed Control	10
Adjusting Wheel Drive Control	11
Adjusting Blade Brake	11
Check Control Bar Operation	12
Preparing Mower For Storage	12
Toro Service Support	13
Optional Spark Arrestor	13
Product Identification	13
Troubleshooting	14
Toro Promise	Back Cover

©The Toro Company – 1987

SET-UP INSTRUCTIONS

INSTALL HANDLE

1. Align upper and lower handle. Tighten handle knobs (Fig. 1).

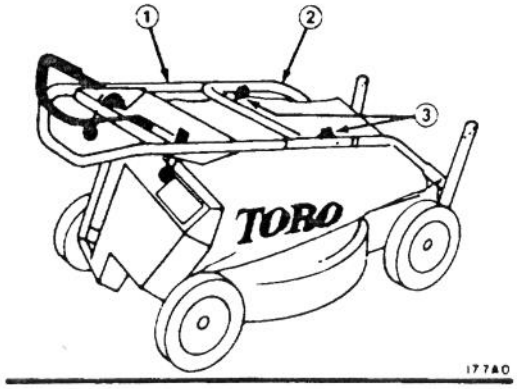

Figure 1

1. *Upper handle*
2. *Lower handle*
3. *Handle knobs*

2. Pivot handle backward until handle studs can be snapped into center holes of handle latches (Fig. 2). Make sure control cables are to the rear and inside of handles.

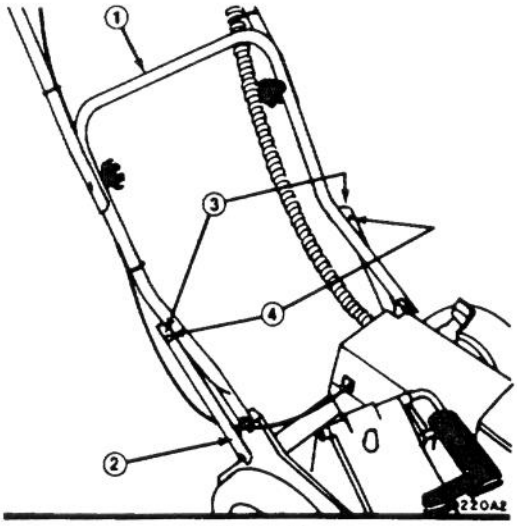

Figure 2

1. *Handle*
2. *Handle latches*
3. *Handle studs*
4. *Latch holes*

Note: Use care when routing the control cables to avoid damage or kinking of cables which can result in failure to meet the stopping time requirements of the Consumer Products Safety Commission Blade Safety Requirement.

Note: If latches do not stay engaged with handle stud, bend latches inward until engagement is maintained.

Note: Handle height is adjustable for operator comfort. Stand behind handle to gauge height. Position handle studs into one of the other holes in handle latches to change height.

ASSEMBLE BAG TO MOWER

1. Assure chute door handle is fully forward and locked in place (Fig. 3).

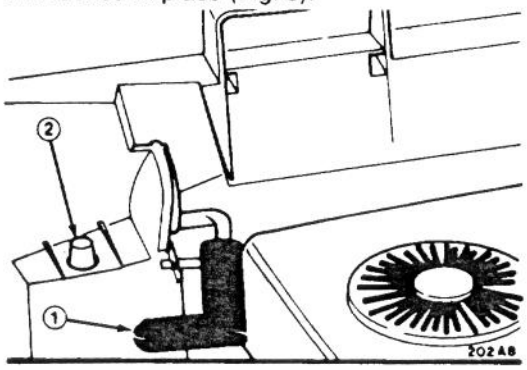

Figure 3

1. *Chute door handle fully forward*
2. *Locating stud*

2. Slide guide hole in upper bag frame onto locating stud on mower housing (Fig. 3); then set rear of bag frame onto lower handle crossbar.

3. Pull chute door handle up until pin clears the bag catch (Fig. 4). Then move handle rearward until pin locks in notch at rear of bag catch (Fig. 4). The chute door in mower housing is now open.

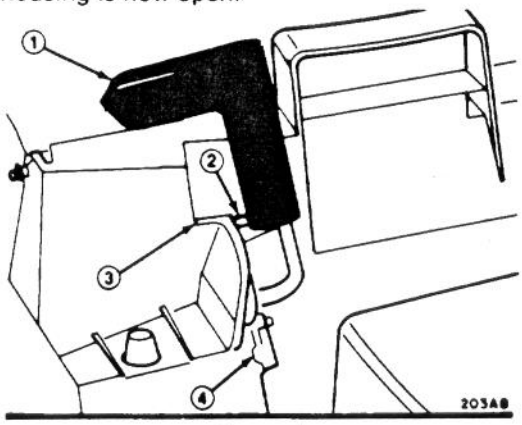

Figure 4

1. *Chute door handle*
2. *Handle pin*
3. *Notch*
4. *Housing latch*

FUEL MIXING INSTRUCTIONS

⚠ DANGER: Gasoline is extremely flammable and explosive under certain conditions. Do not smoke when handling fuel and keep fuel far away from open flames and sparks. Never buy more than a 30 day supply of gasoline and store it in an approved container. Keep gasoline out of reach of children.

Refuel outdoors, only when engine is cold. Fill tank to within 1/4" to 1/2" (6 to 13 mm) from its top. This space is for expansion of fuel. Use funnel or spout to prevent spilling. Wipe up any spilled gas. Assure area is dry before starting engine.

MIX GASOLINE AND OIL (Fig. 5)

1. APPROVED OIL—This lawn mower engine requires a mixture of unleaded gas and two-cycle oil. Toro two-cycle oil has been thoroughly tested and approved for use in the engine at a 50:1 ratio. Failure to use proper fuel mixture will cause serious engine damage. Since Toro oil is specially formulated, it has superior lubrication qualities, burns cleaner, promotes easy starts and prolongs engine life.

IMPORTANT: IN AN EMERGENCY, B.I.A. TC-W CERTIFIED OILS MAY BE SUBSTITUTED. NON B.I.A. APPROVED OILS HAVE NOT BEEN APPROVED FOR USE IN TORO PRODUCTS AND MAY VOID THE WARRANTY. NEVER USE FOUR-CYCLE AUTOMOTIVE OILS, SUCH AS SAE 30 OR 10 W 30 BECAUSE ENGINE DAMAGE MAY OCCUR.

2. GASOLINE—THE TORO COMPANY STRONGLY RECOMMENDS THE USE OF CLEAN, FRESH **UNLEADED** REGULAR GASOLINE IN TORO GASOLINE POWERED PRODUCTS. UNLEADED GASOLINE BURNS CLEANER, EXTENDS ENGINE LIFE, AND PROMOTES GOOD STARTING BY REDUCING THE BUILD-UP OF COMBUSTION CHAMBER DEPOSITS. LEADED GASOLINE CAN BE USED IF UNLEADED IS NOT AVAILABLE.

NOTE: NEVER USE METHANOL, GASOLINE CONTAINING METHANOL, GASOHOL CONTAINING MORE THAN 10% ETHANOL, GASOLINE ADDITIVES, PREMIUM GASOLINE, OR WHITE GAS BECAUSE ENGINE FUEL SYSTEM DAMAGE COULD RESULT.

3. MIXING — In an approved gasoline container, thoroughly mix prescribed amount of gasoline and two-cycle oil (refer to Fuel Mixing Chart). DO NOT MIX FUEL IN MOWER FUEL TANK. FOR BETTER MIXING, OIL SHOULD BE AT ROOM TEMPERATURE.

4. Fill mower fuel tank to within 1/4" to 1/2" (6 to 13mm) from top of tank, not the filler neck. Install fuel tank cap securely.

50:1
Fuel Mixing Chart

Toro two-cycle oil is available in easy mix four ounce pouches and eight ounce cans.

U.S. GALLON		IMPERIAL GALLON	
Gasoline	**Oil**	**Gasoline**	**Oil**
1 gallon	2.6 oz.	1 gallon	3 oz.
1½ gallons	4 oz. pouch	1½ gallons	4.5 oz.
2 gallons	5.2 oz.	2 gallons	6 oz.
2½ gallons	6.5 oz.	2½ gallons	7.5 oz.
3 gallons	8 oz. can	3 gallons	9 oz.

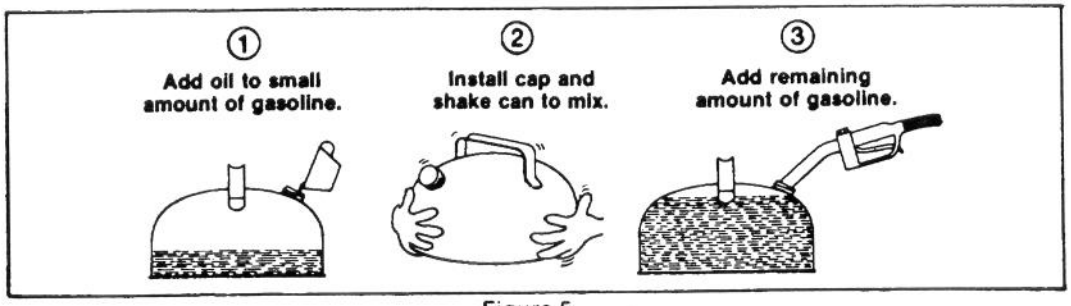

Figure 5

OPERATING INSTRUCTIONS

⚠ CAUTION

To reduce potential accidents, never perform an adjustment or maintenance procedure while the engine is running. Pull high tension wire off spark plug to prevent an accidental start.

ADJUST HEIGHT-OF-CUT

Height-of-cut is adjustable from approximately 1 to 3 inches (25 mm to 76 mm), in 1/2 (12.7 mm) increments. Letters cast into the housing represent each graduated increment (Fig. 6).

A = 1 Inch (25 mm)
B = 1-1/2 Inches (38 mm)
C = 2 inches (51 mm)
D = 2-1/2 Inches (64 mm)
E = 3 Inches (76 mm) (Front Only)

1. ⚠ Assure engine is not running before adjusting height-of-cut because contact with the blade will cause personal injury.

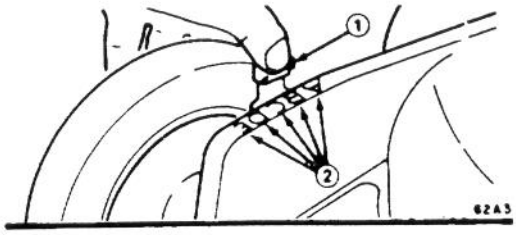

Figure 6

1 Height-of-cut adjuster
2 Height selection guide letters

2. Place thumb against height-of-cut adjuster and fingers on outside of wheel (Fig. 6).

3. Raise mower housing until wheel is off the ground. Squeeze height-of-cut adjuster toward wheel so its location pin disengages notch in mower housing. Then pivot the wheel and adjuster to the desired height-of-cut and release adjuster so locating pin engages notch in housing.

4. To adjust to 1/2 inch (12.7 mm) setting on front wheels, rotate height-of-cut adjuster rearward past "A" until pin engages notch in housing.

STARTING/STOPPING THE ENGINE

1. Assure high tension wire is pushed onto spark plug.

2. Move speed selector to N (NEUTRAL) (Model 20684). Move throttle control to CHOKE position (Fig. 7). Cover hole in center of Primer with thumb and push once (Fig. 13).

3. Place foot on step at left side of mower housing (Fig. 8) and keep other foot from

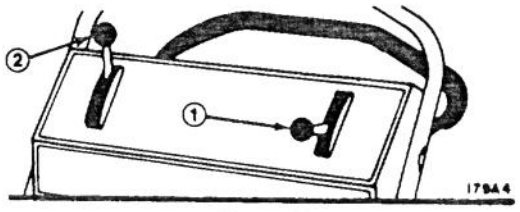

Figure 7

1. Throttle control
2. Speed selector

beneath the housing. Pull fingertip starter handle up gently until positive engagement results, and pull handle quickly to start the engine. Regulate throttle as desired.

Note: When starting a warm engine, CHOKE and PRIMER may not be necessary.

4. To stop engine, move throttle control to OFF position.

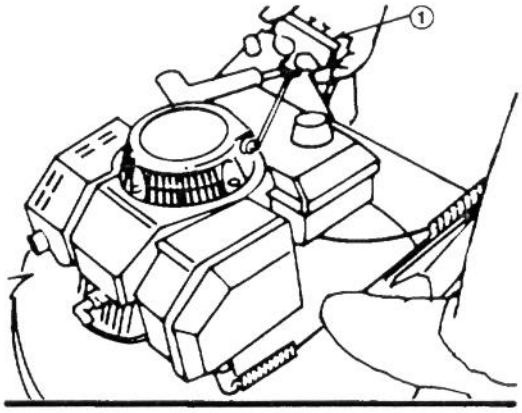

Figure 8

1 Recoil starter

5. Pull high tension wire off spark plug to prevent possibility of accidental starting when mower is unattended or not used.

MOWER OPERATION (Model 20584)

1. To engage blade, move control bar down until it stops (Fig. 9), then move control bar back up to handle. Blade is now fully engaged.

2. To stop blade operation, release control bar which will return to the middle position.

MOWER OPERATION (Model 20684)

1. Shift ground speed control to the desired ground speed selection.

2. To engage blade, move control bar down until it stops (Fig. 9), then move control bar

back to the middle position. Blade is now fully engaged.

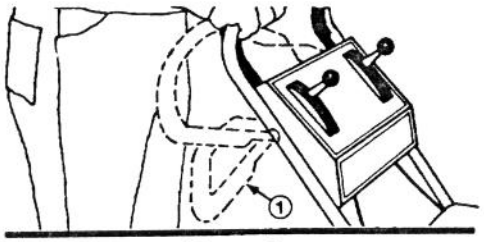

Figure 9

1. Control bar

3. To drive mower with blade engaged, move control bar as instructed in previous step to engage blade, then continue moving control bar forward to handle. Mower can be operated at variable speed in any gear by moving control bar partially forward. Mower ground speed will increase, up to speed allowed by gear selection, as control bar is moved toward handle.

4. To stop drive operation, gradually release control bar until traction ceases.

5. To move mower in reverse, gradually release control bar until traction ceases, then pull back on upper handle.

6. To stop drive and blade operation, release control bar which will return to the middle position.

7. To drive mower without blade operating, move control bar forward to the handle, without moving it down to engage blade.

8. Always shift the ground speed control lever to N (NEUTRAL), when operations are completed.

9. If a mower has a tendency to creep (move forward) when control bar is in middle position, drive belt is too tight. If there is slow or no ground speed, even though ground speed control handle is in one of the gear selections and control bar is squeezed fully, drive belt is too loose. Refer to Adjusting Wheel Drive Control, page 11.

OPERATING CHARACTERISTICS AND TIPS

5 in 1 Versatility

To use the mower for bagging grass, install the bag, open the chute door in mower housing and start the engine. While the bag is expanded, grass can be cut. Stop the engine and empty the bag when expansion of the bag has discontinued.

When bagging is not desired, simply close the chute door in mower housing and mulch clippings or use the optional Side Discharge Chute. In the fall add the optional Leaf Shredder to reduce leaf size which minimizes emptying stops and number of trash bags used. To keep your lawn healthy, the optional De-Thatcher loosens damaging thatch which is then vacuumed up by mower for easy clean up.

The mower is equipped with a rear shield which helps protect from objects that might be thrown rearward and possibly from contact with the blade. Never remove the rear shield because it is a safety device, designed for your protection. If the shield is ever damaged, replace it before operating the mower.

After the mower is used, it should be cleaned and maintained so it is ready for the next cutting. Frequently check the blade, and assure the blade bolt is tight. If a solid object is hit by the blade or if mower vibrates abnormally, shut engine off immediately and wait for all moving parts to stop. Disconnect high tension wire from spark plug and keep wire away from plug to prevent possibility of accidental starting. Check mower for possible damage, bent blade, bent crankshaft, an obstruction, or loose part(s). Make all repairs before using the mower.

Whenever the mower is being operated, adjusted or maintained, the safety instructions at the front of this manual must be kept in mind. Safe operation is your responsibility.

CUTTING TIPS

1. When cutting long grass, using a high height of cut, lower rear wheels one setting to increase cutting surface of blade, therefore improving appearance of cut.

2. To assure optimum cutting performance, install a sharp blade at the start of each cutting season. During the year, file down small nicks to maintain a fine cutting edge.

BAGGING

Bagging is most effective when engine is running at maximum speed and only about 1/3 of grass blade is being cut. If an excessive amount of grass is being cut off, the mower can plug and cause the engine to stall. If long grass must be cut, adjust mower to the highest height-of-cut; then cut the grass. Follow this by lowering the height-of-cut and cutting the grass again.

OPERATING INSTRUCTIONS

1. ⚠ Assure engine has stopped running so that cutter blade is not moving.

2. Assure chute door handle is fully forward and handle pin is released into housing latch (Fig. 10). The chute door is now closed.

3. Slide guide hole in bag door onto locating stud on mower housing (Fig. 10); then rest rear of bag frame onto lower handle crossbar.

⚠ WARNING

The grass bag material will catch and contain the majority of foreign objects, such as small stones and other similar debris. The bag material, however, is subject to normal wear and deterioration. So check the bag frequently, and if it is defective, install a new, genuine TORO replacement bag that has this or similar warning.

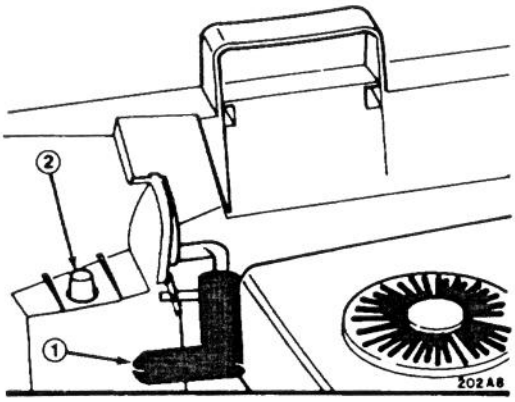

Figure 10

1. *Chute door handle fully forward*
2. *Locating stud*

4. Pull up chute handle until handle pin clears the housing latch. Then move handle rearward until pin locks in notch at rear of bag latch (Fig. 11). The chute door in mower housing is now open, and mower is ready to bag grass.

Note: Bag door may have to be forced downward onto housing latch, allowing housing latch to release handle lockout lever.

5. ⚠ When bag must be emptied, stop the engine and wait for all parts to stop moving. Move chute door handle forward until it locks in the housing latch. Then lift bag straight up so clippings stay in the bag.

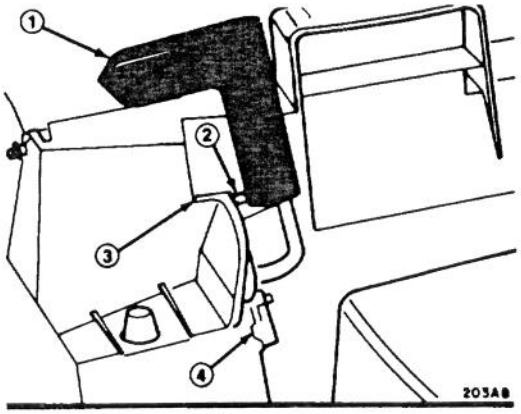

Figure 11

1. *Chute door handle*
2. *Handle pin*
3. *Notch*
4. *Housing latch*

IMPORTANT: If chute door cannot be closed because grass clippings clog discharge area, move chute door gently, back and forth. Do this until clippings are pushed into the bag and chute door can be closed completely. DO NOT FORCE THE CHUTE DOOR CLOSED because the door or handle may be damaged.

⚠ CAUTION

Never open the chute door when grass bag is removed from the mower and engine is running. Grass clippings and other debris will be discharged with enough force to cause personal injury. Do not operate mower unless complete bag assembly is attached and properly positioned or rear door is completely closed.

6. To dump grass out of bag, grasp handle at rear of bag and open door at front of bag.

While shaking the bag, gradually tip it forward so grass sifts out. Do not try to dump all the grass at once.

7. Reinstall bag by repeating steps 3 and 4.

MOWING WITHOUT BAGGING

The Rear Bagger can be used to mulch dry grass. However, this is most effective when only about 1/4 of the grass blade is cut. During this process, the blade slices the cut pieces of

OPERATING INSTRUCTIONS

grass again and again, so very fine particles of grass are deposited on the lawn. These fine grass clippings eventually decompose.

1. ⚠ Assure engine is not running and cutter blade is not moving.

2. Pull up chute handle, move door handle fully forward, and release handle pin into housing latch (Fig. 10). The chute door in mower housing is now closed, and mower is ready for mowing operation. Leave bag on mower.

⚠ DANGER

Never open chute door when mowing without bag installed because grass clippings or other debris will be discharged with enough force to cause personal injury.

MAINTENANCE

⚠ DANGER

To prevent personal injury, pull high tension wire off spark plug while performing adjustment or maintenance procedures.

LUBRICATING AXLE PIVOTS (Model 20684)

After every 25 operating hours, to prevent premature bearing failure, grease the (2) rear axle pivots with No. 2 Multi-Purpose Lithium Base Grease.

1. Set height-of-cut to center height setting (C).

2. Wipe grease fitting with clean rag.

3. Install grease gun onto fitting and gently apply grease (Fig. 12). (Approximately 2-3 pumps). Excessive grease pressure may damage seals.

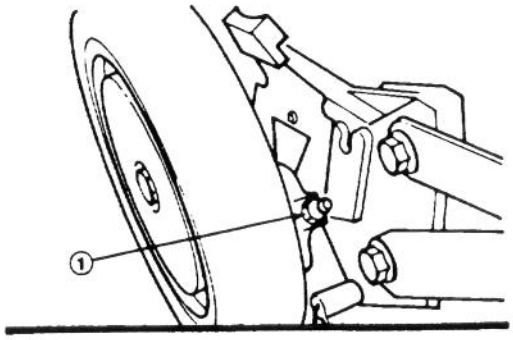

Figure 12

1. Grease fitting

SERVICING AIR CLEANER

The air cleaner element must be cleaned after every 25 hours of engine operation if the engine is operated in clean air conditions. The element must be cleaned more frequently, however, when mower is operated in dusty or dirty conditions.

1. Lift tabs securing top of air cleaner cover and pivot cover down. Clean inside of cover if it is dirty (Fig. 13).

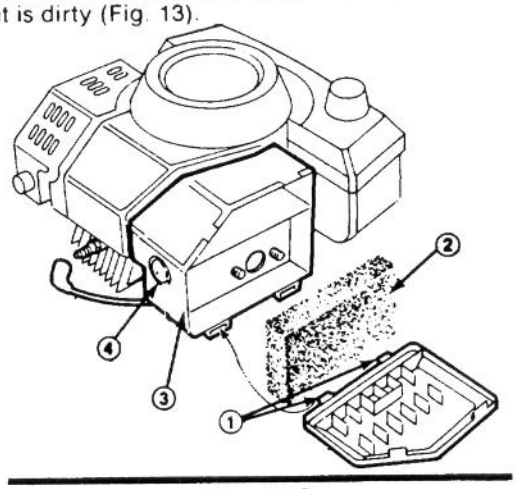

Figure 13

1. Cover tabs 3. Air cleaner body
2. Element 4. Primer

2. If air cleaner element is dirty, clean thoroughly (Fig. 13).

Note: Do not allow dirt to enter air cleaner body because engine damage may result.

A. WASH element in a solution of liquid soap and warm water. Squeeze element to remove dirt. Do not twist element because it may tear.

MAINTENANCE

B. DRY element by wrapping it in a clean rag. Squeeze rag and element until element is dry.

C. SATURATE element with 5 teaspoons (25 ml) SAE 30 engine oil. Squeeze element to remove excess oil and to distribute the oil thoroughly. A damp element is desirable.

D. Place element into the air cleaner body.

3. Install cover and assure it snaps in place and is seated securely.

IMPORTANT: Do not operate engine without air cleaner element because extreme engine wear and damage will likely result.

REPLACING SPARK PLUG

Recommended spark plug is a NGK BPMR4A or equivalent. Remove plug after every 25 hours of engine operation and check its condition.

1. Pull high tension wire off spark plug and clean area around spark plug. Remove plug from cylinder head.

IMPORTANT: A cracked, fouled or dirty spark plug must be replaced. Do not sand blast, scrape or clean electrodes, because grit may eventually release from the plug and fall into the cylinder. The result will likely be engine damage.

2. Set air gap between electrodes at 0.032 of an inch (Fig. 14). Install the correctly gapped spark plug with gasket and tighten plug to 10 ft-lb. If torque wrench is not used, tighten plug firmly.

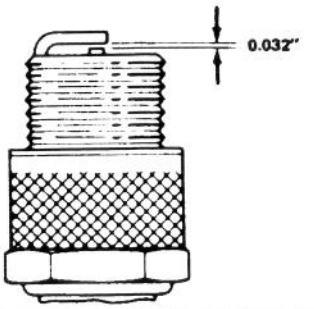

Figure 14

Air gap between electrodes

DRAINING GASOLINE

1. Using a pump-type syphon, drain gasoline into a clean gas can. This is the only recommended method of draining gasoline.

INSPECTING, SHARPENING OR REPLACING CUTTER BLADE

1. ⚠ Drain gasoline from fuel tank.

2. Tip mower on its right side (Fig. 15).

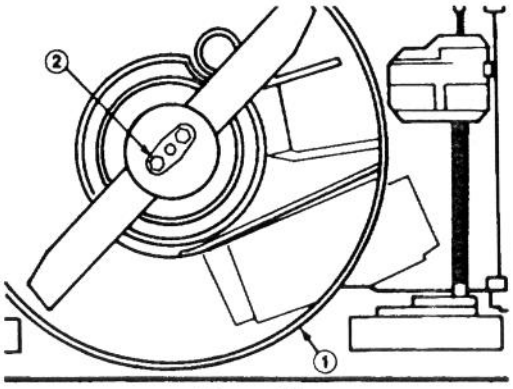

Figure 15

1. Mower tipped on right side
2. Locknuts and anti-scalp cup

3. Examine cutting ends of the blade carefully, especially where the flat and curved parts of the blade meet (Fig. 16A). Since sand and abrasive material can wear away the metal that connects the flat and curved parts of the blade, check the blade before using the mower. If any wear is noticed (Fig. 16B), replace the blade: refer to step 5.

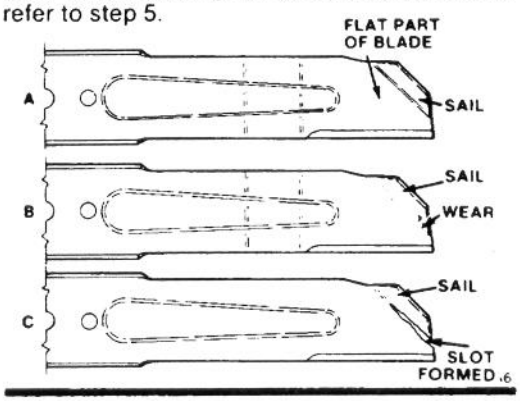

Figure 16

4. Grasp end of blade using a rag or thickly padded glove and remove locknuts, anti-scalp cup and blade (Fig. 15).

5. Using a file, sharpen cutting edge at both ends of the blade (Fig. 17).

CAUTION

If the blade is allowed to wear, a slot will form between the sail and flat part of the blade (Fig. 16C). Eventually, a piece of the blade may break off and be thrown from under the housing, possibly resulting in serious injury to yourself or bystander.

IMPORTANT: Sharpen top side of blade and maintain original angle to assure a sharp cutting edge (Fig. 17). Blade will remain balanced if same amount of material is removed from both cutting edges.

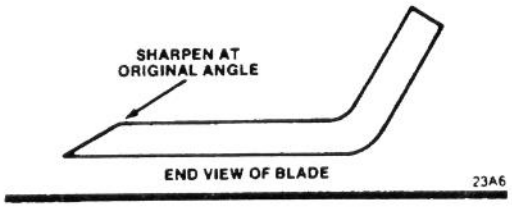

Figure 17

7. Check balance of blade. If blade is not balanced, file more metal off cutting edge on heavy end of blade.

8. Install blade and anti-scalp cup with locknuts. Sail part of the blade must point toward top of the mower housing to assure correct installation. Tighten locknuts to 15-26 ft-lb (20-35 N-m).

CLEANING MOWER HOUSING

To assure a good cut and efficient grass bagging, underside of mower housing and inside of discharge area must be kept clean.

1. Drain gasoline from fuel tank.
2. Tip mower on its right side.
3. Remove grass clippings and dirt that sticks to the housing by spraying it with a garden hose. Scrape out any remaining grass with a hard wood scraper. Avoid any burrs and sharp edges.
4. After cleaning, start engine and engage BBC system (Control Bar) to remove any water trapped in mechanism.

INSTALLING GROUND SPEED CONTROL (Model 20684)

Whenever a new ground speed control assembly is installed, the control must be adjusted.

1. Close door in mower housing and remove bag.
2. Remove two capscrews securing transmission cover and remove cover (Fig. 18). Thoroughly clean the top of the transmission.
3. Loosen capscrew securing ground speed control cable, remove roll pin securing transmission control lever, pull lever out of the transmission and remove control cable from lever (Fig. 18).

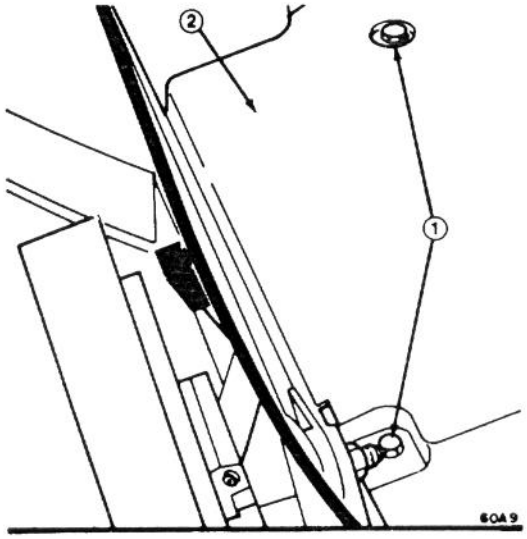

Figure 18

1. *Transmission cover mounting capscrews*
2. *Transmission cover*

4. Remove ground speed control lever from the control panel.
5. Install ground speed control cable assembly into control panel and adjust assembly for proper operation: refer to Adjusting Ground Speed Control.
6. Insert new cable end into hole in control lever from bottom of lever, install lever into the transmission and secure with roll pin (Fig. 19).

ADJUSTING GROUND SPEED CONTROL (Model 20684)

An adjustment of the ground speed control may be required if the ground speed of the mower is incorrect or if a new ground speed control assembly is installed.

1. Close door in mower housing and remove bag.
2. Remove two capscrews securing transmission cover and remove cover (Fig. 18).

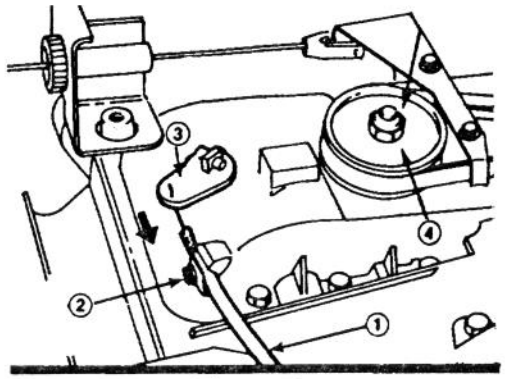

Figure 19

1. *Ground speed control cable*
2. *Capscrew*
3. *Transmission control lever*
4. *Pulley*

3. Loosen the capscrew securing the ground speed control cable (Fig. 19, item 1).

4. Push transmission control lever to right in direction of cable clamping capscrews as far as possible, hold in position and tighten capscrew (Fig. 19).

5. Pull mower rearward with ground speed control in NEUTRAL. Mower should pull back freely without any rotation of pulley on top of gear case. If rotation of pulley occurs, adjustment for NEUTRAL is incorrect. Repeat steps 3-5.

6. Install transmission cover.

ADJUSTING WHEEL DRIVE CONTROL (Model 20684)

An adjustment to wheel drive control may be required if loss of traction occurs, or if mower has a tendency to creep forward when control bar is in RUN/SHIFT position.

1. Close door in mower housing and remove bag.

2. Rotate adjustment knob (Fig. 20) 1/2 turn clockwise to tighten drive belt, or 1/2 turn counterclockwise to loosen belt. Hold control cable while rotating knob to prevent cable from turning.

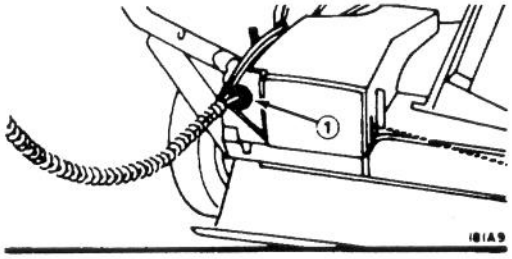

Figure 20

1. *Adjustment knob*

⚠ CAUTION

Over-adjusting cable may cause mower to move without engaging traction drive.

3. Check wheel drive adjustment by slowly pulling mower rearward while slowly squeezing control bar toward upper handle. Mower will no longer move rearward when wheel drive engages. Control bar should be approximately 1½ inch (38 mm) from upper handle when wheel drive engages (Fig. 21). If loss of traction still occurs after readjustment, repeat procedure.

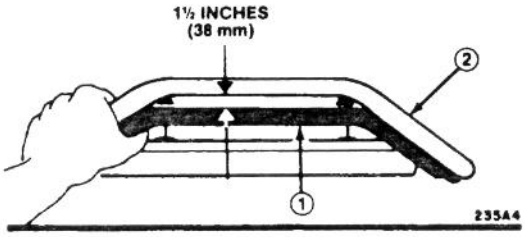

Figure 21

1. *Control bar*
2. *Upper handle*

ADJUSTING BLADE BRAKE

An adjustment to the blade brake cable may be required if the blade slips or cutting power is lost.

1. ⚠ Assure engine is not running and high tension wire is off the spark plug.

2. Loosen cable clamp screw until brake cable is free to slide (Fig. 22).

3. Pull brake cable slightly to remove any slack but not enough to put tension on the spring (Fig. 22). Tighten the cable clamp screw to lock the adjustment in place.

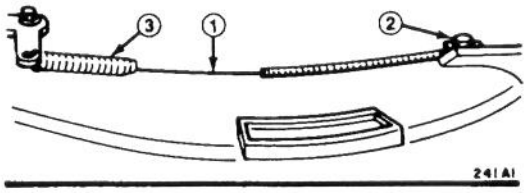

Figure 22

1. *Blade brake cable*
2. *Cable clamp screw*
3. *Spring*

MAINTENANCE

CHECK CONTROL BAR OPERATION

Control bar should be checked periodically, at the beginning of each mowing season as a minimum, to assure the Blade Brake Clutch (BBC) system is operating properly.

1. Start engine; refer to Starting, page 5.

2. Push the control bar down to the lowest position (Fig. 23). This "cocks" the mechanism prior to engaging the blade.

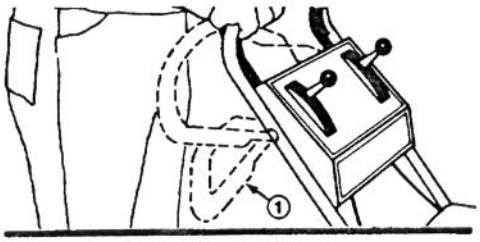

Figure 23

1. Control bar

3. Lift the control bar to the normal "blade engaged" position, about 1" below the handle (Fig. 23). The "fan" noise and bag inflation indicate that the mower blade is engaged and rotating.

4. Release the control bar. A "bang" should be heard and the blade should stop within 3 seconds. If the blade does not stop within 3 seconds when the control bar is released, stop using it until it has been serviced by an Authorized TORO Service Dealer.

If your unit stops with the required 3 seconds, the BBC system is operating properly. However, to detect the BBC system deterioration before it affects normal operation, proceed to step 5.

5. Start engine if not already running.

6. Push the control bar down to its lowest position, cocking the mechanism (Fig. 23).

7. Slowly lift the control bar to a point where the bag just begins to inflate (about 5" below the handle). This indicates that the mower blade is engaged and has begun to rotate.

NOTE: This intermediate position is not the "natural" operating position of the control bar. However, it has proven to be useful in early detection of latent BBC sticking which could create an unsafe condition later in the life of the mower.

8. Release the control bar.

NOTE: If a "bang" is heard and the bag immediately deflates, the control bar had been raised too far. Repeat steps 6, 7 & 8, but do not raise the handle as high in step 8.

If the control bar "hangs up" and the blade does not quickly stop, it indicates possible deterioration has set in, which could result in an unsafe operating condition. Have mower inspected by an Authorized TORO Service Dealer.

CAUTION – If the control bar "Hangs up" and the blade does not stop quickly, you should stop the blade before shutting the engine off. This can be done by raising the control bar to the normal operation position and releasing it.

PREPARING MOWER FOR STORAGE

1. Drain gasoline from fuel tank and fuel line. Refer to Draining Gasoline. Start the engine and let it run at idle speed until it stops.

Note: All gasoline must be expended to prevent gum-like deposits from forming in the carburetor, fuel line and fuel tank, which will cause starting problems and poor engine operation.

2. Remove spark plug from cylinder head and pour two teaspoons of 2-cycle oil into spark plug hole. Pull recoil starter handle slowly to distribute oil on inside cylinder. Then install spark plug and tighten it to 10 ft-lb (20.4 N·m). If torque wrench is not used, tighten plug firmly. DO NOT INSTALL HIGH TENSION WIRE ON SPARK PLUG.

3. Clean grass clippings, dirt and grime from external parts of engine, shrouding and top and bottom of mower housing.

4. Check condition of blade and blade nuts.

5. Check and tighten all capscrews, bolts, screws, nuts and mating parts. If any part is damaged, repair or replace it. Inspect grass bag. Replace it if it is damaged or deteriorated.

6. Lubricate rear pivot assemblies.

7. Wash air cleaner element in a liquid soap detergent and water and add oil to element.

8. Touch up all chipped paint surfaces. Make sure to sand affected area before painting.

9. Store the mower in a clean, dry place. Cover the mower to protect it and keep it clean.

Note: Assure upper handle is in proper position and handle knobs are securely tightened before resuming operation.

TORO SERVICE SUPPORT

If help — concerning safety, set-up, operation and maintenance or troubleshooting — is ever needed, contact the local Authorized TORO Service Dealer or Distributor. Refer to the "Yellow Pages" for assistance. In addition to skilled service technicians, the dealer and distributor have factory approved accessories and replacement parts. Keep your Toro all TORO. Buy genuine TORO replacement parts and accessories.

OPTIONAL SPARK ARRESTOR — PART #81-0200

If a spark arrestor is required because of local, state or federal regulations, it may be purchased at your local Authorized TORO Service Dealer. If mower is operated on any California forest, brush or grass covered land without a properly operating spark arrestor, the operator is violating state law, Section 4442 Public Resources Code.

PRODUCT IDENTIFICATION

A model number and a serial number decal is located at rear of mower housing, near the discharge door. Always refer to specific numbers on this decal in correspondence or when replacement parts are needed.

TROUBLESHOOTING

Problem	Possible Causes	Correction Action
Engine does not Start	1. Throttle not in start position. 2. Gas tank is empty 3. Air cleaner element is dirty. 4. Spark plug loose. 5. High tension wire loose or disconnected from spark plug 6. Spark plug gap is incorrect. 7. Spark plug is defective. 8. Carburetor is flooded with gasoline.	1. Move throttle to choke 2. Fill fuel tank with gasoline. 3. Clean air cleaner element. 4. Tighten spark plug to 10 ft-lb (20.4 N·m). 5. Install high tension wire on plug 6. Set gap between electrodes at 0.032 of an inch (0.79 mm) 7. Install new, correctly gapped plug. 8. Remove air cleaner element and pull starter rope continuously until carburetor clears itself and engine starts. When engine starts, stop it and install air cleaner element
Engine starts hard or loses power.	1. Dirt, water, or stale fuel in gas tank. 2. Vent hole in fuel tank cap is plugged. 3. Air cleaner is dirty.	1. Drain gas and clean fuel tank. Fill tank with clean, fresh gasoline. 2. Clean or replace fuel tank cap. 3. Clean the air cleaner element.
Engine operates erratically.	1. Spark plug is defective. 2. Spark plug gapped incorrectly 3. Air cleaner is dirty.	1. Install new, correctly gapped plug. 2. Set gap between electrodes at 0.032 of an inch. (0.79 mm) 3. Clean the air cleaner element.
Engine idles poorly	1. Air cleaner is dirty. 2. Air slots in engine shroud are plugged. 3. Cooling fins and air passages under engine blower housing are plugged	1. Clean the air cleaner element. 2. Remove obstruction from slots. 3. Remove obstruction from cooling fins and air passages.
Engine misfires at high speed.	1. Air gap between electrodes of spark plug is too close	1. Set air gap at 0.032 of an inch (0.79 mm)
Engine overheats	1. Cooling air flow is restricted. 2. Incorrect spark plug **Note:** A Toro Service Dealer may have to be consulted if any of the above causes have occurred	1. Remove any obstruction from slots in shroud, blower housing, air passages, and colling fins on engine 2. Install NGK BP MR4A spark plug that is gapped at 0.032 of an inch (0.79 mm)
Mower vibrates abnormally	1. Blade nuts are loose. 2. Cutter blade is unbalanced	1. Tighten blade nuts to proper specification. 2. Sharpen cutter blade and check the balance. Replace the blade if it cannot be balanced.
No traction drive (Model 20684)	1. Ground speed control maladjusted or broken. 2. Transmission drive belt loose or broken 3. Traction Control Handle cable maladjusted or broken 4. Damaged wheel and pinion gear assembly 5. Malfunction in transmission assembly. **Note:** A Toro Service Dealer may have to be consulted if items 2-5 have occurred	1. Adjust ground speed control 2. Adjust belt tension or replace belt. 3. Adjust or replace cable 4. Repair as necessary 5. Repair as necessary.
Mower creeps forward — traction control handle disengaged. (Model 20684)	1. Debris caught between mower housing and transmission. (Belt under tension 2. Traction belt over-tensioned, i.e., belt not loose enough when disengaged.	1. Remove transmission cover and clear debris away. 2. Relieve belt tension.

MAINTENANCE RECORD

Date	Hours Used	Air Cleaner Service	Lubrication	Spark Plug	Winter Storage

The Toro Promise

A Two Year Limited Warranty
On All
Gasoline Powered Consumer Products

The Toro Company promises to repair these TORO Products if defective in materials or workmanship. The following time periods from the date of purchase apply:

Residential Product . . . . . 2 Years
Residential Products Used Commercially . . . 45 Days

The costs of parts and labor are included, but the customer pays the transportation costs. Just return any residential product to an Authorized TORO Service Dealer or TORO Distributor.

Should you feel your TORO is defective and wish to rely on The Toro Promise, the following procedure is recommended:

1. Contact any Authorized TORO Service Dealer, TORO Master Service Dealer, or TORO Distributor (the Yellow Pages of your telephone directory is a good reference source).
2. He will either instruct you to return the product to him or recommend another Authorized TORO Service outlet which might be more convenient.
3. Bring the product along with your original sales slip, or other evidence of purchase date, to the service dealer.
4. The servicing dealer will inspect the unit, advise you whether the product is defective and, if so, make all repairs necessary to correct the defect without extra charge to you.

If for any reason you are dissatisfied with the dealer's analysis of the defect or the service performed, you may contact us.

Write:
TORO Customer Service Department
8111 Lyndale Avenue South
Minneapolis, Minnesota 55420

The above remedy of product defects through repair by an Authorized TORO Service Dealer is the purchaser's sole remedy for any defect.

THERE IS NO OTHER EXPRESS WARRANTY. ALL IMPLIED WARRANTIES OF MERCHANTABILITY AND FITNESS FOR USE ARE LIMITED TO THE DURATION OF THE EXPRESS WARRANTY.

Some states do not allow limitations on how long implied warranty lasts, so the above limitation may not apply to you.

This Warranty applies only to parts or components which are defective and does not cover repairs necessary due to normal wear, misuse, accidents, or lack of proper maintenance. Regular, routine maintenance of the unit to keep it in proper operating condition is the responsibility of the owner.

All warranty repairs reimbursable under The Toro Promise must be performed by an Authorized TORO Service Dealer using Toro approved replacement parts.

Repairs or attempted repairs by anyone other than an Authorized TORO Service Account are not reimbursable under The Toro Promise. In addition, these unauthorized repair attempts may result in additional malfunctions, the correction of which is not covered by warranty.

THE TORO COMPANY IS NOT LIABLE FOR INDIRECT, INCIDENTAL OR CONSEQUENTIAL DAMAGES IN CONNECTION WITH THE USE OF THE PRODUCT INCLUDING ANY COST OR EXPENSE OF PROVIDING SUBSTITUTE EQUIPMENT OR SERVICE DURING PERIODS OF MALFUNCTION OR NON-USE.

Some states do not allow the exclusion of incidental or consequential damages, so the above exclusion may not apply to you.

This warranty gives you specific legal rights, and you may also have other rights which vary from state to state.

COUNTRIES OTHER THAN THE UNITED STATES OR CANADA

Customers who have purchased TORO products exported from the United States or Canada should contact their TORO Distributor (Dealer) to obtain guarantee policies for your country, province or state. If for any reason you are dissatisfied with your Distributor's service or have difficulty obtaining guarantee information, contact the TORO importer. If all other remedies fail, you may contact us at The Toro Company.

Compliance with Radio Interference Regulations Certified.
Certifie Conforme au Reglement sur le Brouillage Radioelectrique.

Litho in U.S.A.