FORM NO. 3313-314, Rev. A

TORO

MODEL NO. 16775-8000001
thru 9000001 & UP
MODEL NO. 16575-8000001
thru 9000001 & UP

OPERATOR'S MANUAL

21" (0.53 m) HP & SP SIDE DISCHARGE
FINGERTIP START

⚠ SAFETY INSTRUCTIONS

This mower "meets or exceeds CPSC blade safety requirements for walk behind rotary mowers," and the B71.1-1986 specifications of the American National Standards Institute. However, improper use or maintenance by the operator or owner can result in injury. To reduce the potential for injury, comply with these safety instructions and always pay attention to the safety alert symbol. Failure to comply with the instructions may result in personal injury.

BEFORE OPERATING

1. Read this manual carefully before operating the mower. Become familiar with the controls and proper use of the mower. Never allow children to operate the mower or adults to operate it without proper instructions.
2. Keep everyone, especially children and pets, away from the area of operation. Thoroughly inspect area where mower will be used. Remove sticks, stones, wire and debris.
3. Wear long pants and substantial shoes. Do not operate mower while wearing open sandals or when barefoot.
4. Check fuel level before starting engine. Do not fill fuel tank indoors, when the engine is running, or until engine cools for several minutes after running. Wipe up spilled gasoline before starting engine.
5. Keep all guards, shields and safety devices in place. Repair or replace defective or damaged parts.
6. Disengage self-propelled drive before starting engine. Engine and blade are designed to stop when control bar is released. Assure control and brake function properly before each use of mower.

WHILE OPERATING

7. Do not run engine indoors.
8. Always maintain secure footing. Keep a firm grip on the handle and walk; never run. Never operate mower in wet grass. Mow only in daylight or in good artificial light.
9. Mow across the face of slopes; never up and down. Use extreme caution when changing direction on slopes. Do not mow excessively steep slopes.
10. Keep face, hands and feet away from the mower housing and cutter blade when the engine is running. Stay behind the handle until the engine stops and keeps clear of discharge opening at all times.
11. During operation, grass deflector or complete bagging assembly must be installed on mower.
12. Shut engine off and wait for all moving parts to stop before unclogging chute or removing grass catcher.
13. Since the blade rotates for a few seconds after blade control is released, stay behind the handle until all moving parts stop.
14. After striking a foreign object or if mower vibrates abnormally, stop engine and remove wire from spark plug. Check mower for damage and make all repairs before using mower again.
15. Stop the engine before adjusting the height-of-cut.
16. Stop the blade when crossing a gravel driveway, road or sidewalk.
17. Stop engine before leaving the operator's position — behind the handle. Disconnect wire from spark plug if mower will be unattended.
18. Do not touch muffler or engine while it is running or shortly after it is stopped because muffler and engine will be hot enough to cause a burn.

MAINTENANCE

19. Perform only those maintenance instructions described in this manual. If major repairs are ever needed or if assistance is desired, contact an Authorized TORO Service Dealer.

⚠ SAFETY INSTRUCTIONS

20. Before mower is cleaned, inspected, serviced or adjusted, stop engine and disconnect high tension wire from spark plug. Keep wire away from plug to prevent accidental starting.

21. To assure the mower is in safe operating condition, frequently check and keep all nuts, bolts and screws tight. Assure blade bolt is tightened to proper specification.

22. To reduce fire hazard, keep engine free of excessive grease, grass, leaves and accumulations of dirt.

23. Check optional grass catcher bag frequently for wear, tears or deterioration. Replace with a new bag for your protection.

24. Allow engine to cool before storing mower in any enclosure. Do not store mower near any open flame or where gasoline fumes may be ignited by a spark.

25. Do not overspeed the engine by changing governor settings.

26. At the time of manufacture the mower conformed to the safety standards in effect for rotary mowers. To assure optimum performance and continued safety certification of the mower, use genuine TORO replacement parts and accessories. Replacement parts and accessories made by other manufacturers may result in non-conformance with the safety standards, and that could be dangerous.

SAFETY DECALS



Safety decals and instructions are easily visible to the operator and are located near any area of potential danger. Replace any decal that is damaged.

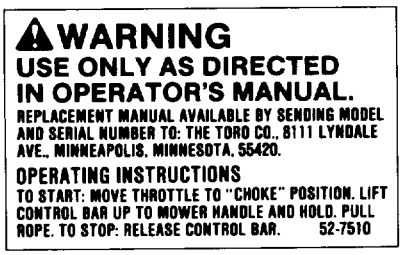

ON HANDLE (Part No. 52-7510)

ON MOWER HOUSING
(Part No. 39-5770)



TABLE OF CONTENTS

	Page
Set-Up Instructions	3
Before operating	4
Operating Instructions	5-6
Maintenance	7-11
Servicing Air Cleaner	7
Replacing Spark Plug	7
Adjusting Throttle	7
Draining Gasoline	7
Changing Crankcase Oil	8
Cleaning Mower Housing	8
Inspecting, Removing, Sharpening Blade	8
Lubrication	9
Checking Transmission Oil Level	9
Adjusting Wheel Drive Control	10
Adjusting Blade Brake	10
Preparing Mower For Storage	10
TORO Service Support	11
Optional Spark Arrester	11
Product Identification	11
The Toro Promise	12

SET-UP INSTRUCTIONS

INSTALL HANDLES AND STARTER ROPE

1. LOWER HANDLES (Fig. 1) — Push ends of handle together and install on pivot pins. Move handle and latches backward until handle studs snap into center hole. Push hair pin cotters through holes in pivot pins.

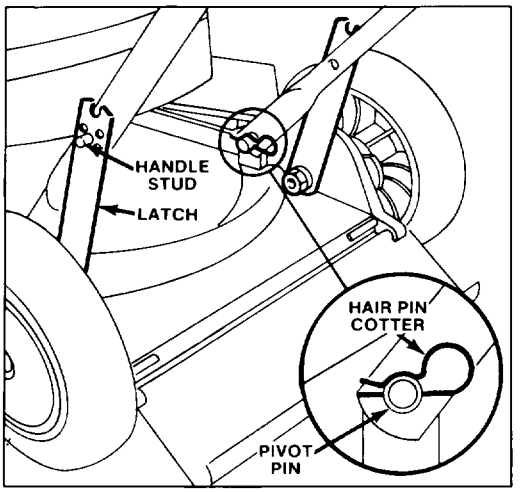

Figure 1

2. UPPER HANDLE (Fig. 2) — Secure upper and lower handles in place with handle screws and flange nuts. Control cables must be in front of lower handle cross member. Secure control cables in position with cable clip.

3. STARTER ROPE (Fig. 3) — Pull starter rope through opening in rope guide. By squeezing control bar (Fig. 6) against handle, blade brake will release and allow rope to be pulled easily up to rope guide.

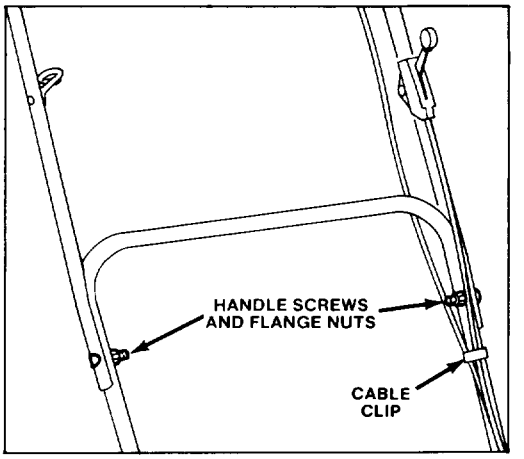

Figure 2

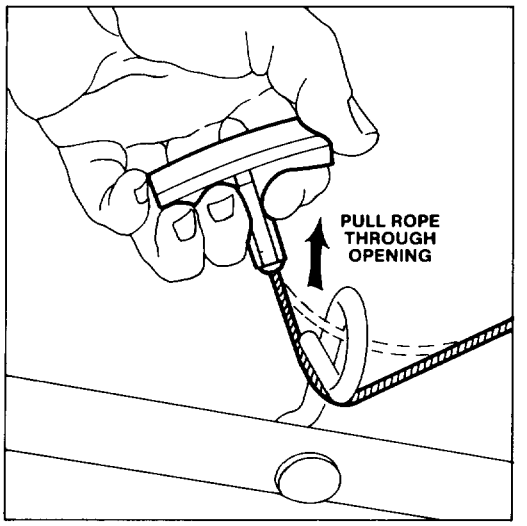

Figure 3

BEFORE OPERATING

FILL CRANKCASE WITH OIL

Initially, crankcase must be filled with 21 ounces (0.621 l) of SAE 30 or 10W30 oil. Use any high quality detergent oil having the American Petroleum Institute – API – "service classification" SF, SC, SD or SE.

Before each use, assure oil level is between "FULL" and "ADD" marks on dipstick. Add oil if level is low.

1. Position mower on level surface and clean around oil dipstick.
2. Remove dipstick by rotating cap counterclockwise 1/4 turn.
3. Wipe dipstick and insert it into filler neck. Rotate cap clockwise 1/4 turn. Then remove dipstick and check level of oil (Fig. 4). If level is low, add only enough oil to raise level to FULL mark on dipstick. DO NOT FILL ABOVE FULL MARK BECAUSE ENGINE COULD BE DAMAGED WHEN STARTED.
4. Insert dipstick into filler neck and rotate cap clockwise 1/4 turn to lock.

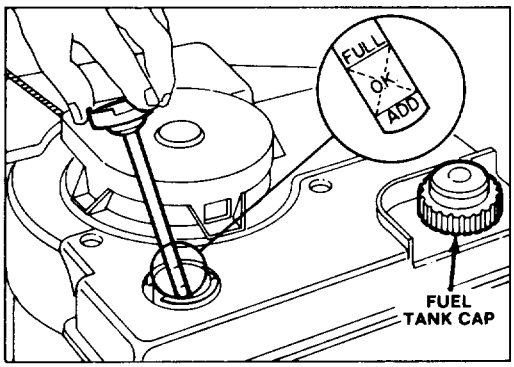

Figure 4

Note: Check oil level each time mower is used or after every 5 operating hours. Initially, change oil after the first 2 hours of operation; thereafter, change oil after every 25 hours of operation. More frequent oil changes are required in dusty or dirty conditions.

FILL FUEL TANK WITH GASOLINE

The Toro Company strongly recommends the use of clean, fresh UNLEADED regular gasoline in Toro gasoline powered products. Unleaded gasoline burns cleaner, extends engine life, and promotes good starting by reducing the build-up of combustion chamber deposits. Leaded gasoline can be used if unleaded is not available.

IMPORTANT: Do not mix oil with the gasoline. Never use METHANOL, gasoline containing METHANOL, gasohol containing more than 10% ethanol, gasoline additives, premium gasoline, or white gas because engine fuel system damage could result.

DANGER

Gasoline is extremely flammable and explosive under certain conditions. Do not smoke when handling fuel and keep fuel far away from open flames and sparks. Never buy more than a 30 day supply of gasoline. Store gasoline in an approved container and keep it out of the reach of children.

Refuel outdoors, only when engine is cold. Fill tank to within 1/4" to 1/2" (6 to 13 mm) from its top. This space is for expansion of fuel. Use funnel or spout to prevent spilling. Wipe up any spilled gas.

OPERATING INSTRUCTIONS

2-IN-1 MOWING VERSATILITY

SIDE DISCHARGE — In summer, disperse clippings to the side when grass grows slower and is drier.

SIDE BAG — Optional side bag kit (Fig. 5) lets you bag lush grass in spring to help keep your lawn free of thatch forming clippings. In the fall, bag leaves while you mow to eliminate the hand-blistering raking job.

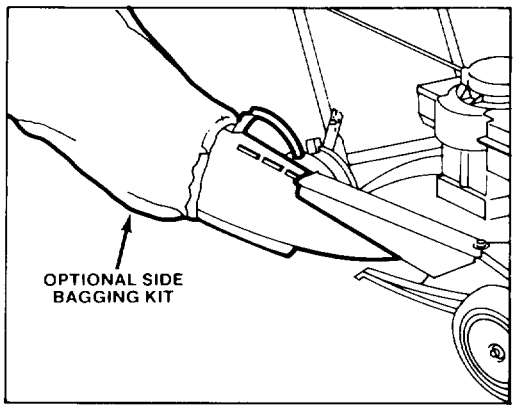

Figure 5

STARTING, STOPPING, SELF-PROPELLING

1. CONTROLS (Fig. 6 & 7) — Wheel drive control (model 16775 only) throttle, blade control bar and fingertip starter are on upper handle.

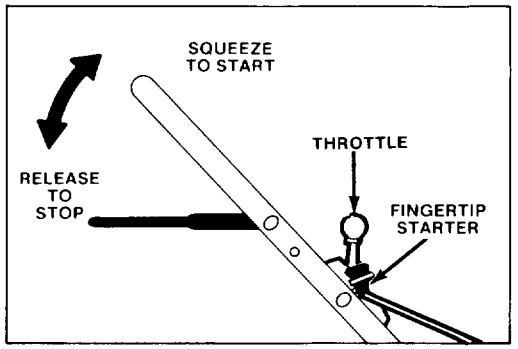

Hand-Push Model 16575
Figure 6

2. STARTING (Fig. 6 & 7)—Push wire onto spark plug. Move wheel drive control to DISENGAGE (model 16775 only) and throttle control to FAST. Hold control bar against handle. Pull fingertip starter out until positive engagement results; then pull vigorously to start the engine. Regulate throttle as required when engine starts.

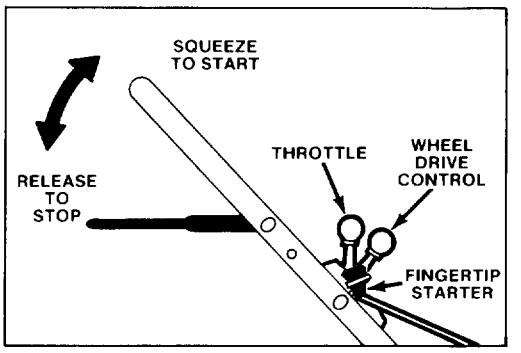

Self-Propelled Model 16775
Figure 7

3. SELF-PROPELLING (Fig. 7) — Move wheel drive control to ENGAGE (model 16775). Front wheels will now drive mower. For maneuvering and making turns, push down on handle to raise front wheels slightly off grass. Move control to DISENGAGE detent to stop front wheel drive.

4. STOPPING (Fig. 6 & 7) — Release control bar to stop engine and blade. Pull wire off spark plug if mower is unattended or not used.

OPERATING TIPS

1. CHECK OIL LEVEL – Maintain oil level between "FULL" and "ADD" marks on dipstick.

2. BEFORE OPERATING – Assure engine, brake and control bar function properly. When control bar is released, engine and blade are designed to stop.

3. CUTTING AND BAGGING – To improve quality of cut, discharge clippings toward previously cut area. Best results are normally achieved when engine runs at maximum speed and only about 1/3 of the grass blade is cut. If long grass must be cut, use highest height-of-cut setting for first mowing. Then recut grass at a more normal setting. If too long of grass is cut or optional bag is allowed to get too full, discharge chute may plug and cause engine to stall. Empty optional grass bag often.

4. SHARPEN BLADE – Begin each cutting season with a sharp blade. Periodically file down nicks.

ADJUSTING HEIGHT-OF-CUT

Five notches cast into the housing represent each graduated increment (Fig. 8).

OPERATING INSTRUCTIONS

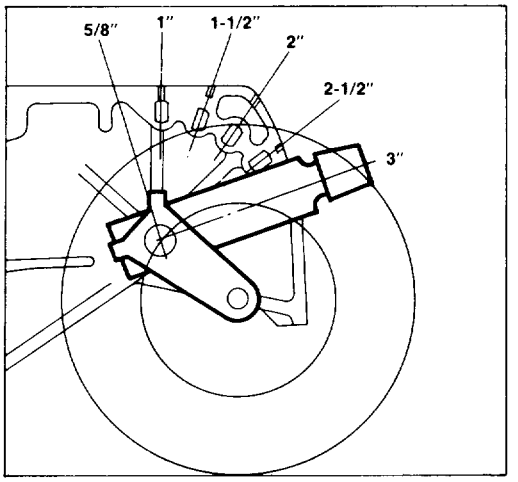

Figure 8

1. Stop the engine and pull wire off spark plug.

2. For easier adjustment, lift housing up so wheel is off ground. Squeeze adjusting lever toward wheel (Fig. 9) and move them to desired setting. Assure pin on adjusting lever engages notch in housing. Adjust all wheels to the same setting.

Note: Front wheels can be adjusted to 5/8-inch. Use this setting with 1-inch rear wheel setting.

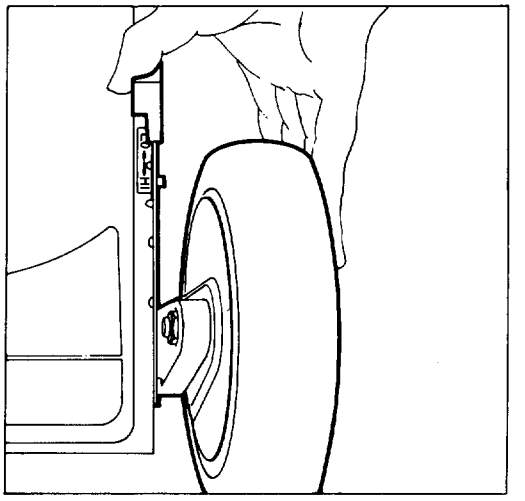

Figure 9

MAINTENANCE

CAUTION

Pull high tension wire off spark plug before performing adjustments or maintenance.

SERVICING AIR CLEANER

Normally, clean air cleaner after every 25 operating hours. More frequent cleaning is required when mower is operated in dusty or dirty conditions.

1. Stop engine and pull wire off spark plug.
2. Lift off air cleaner cover and clean thoroughly (Fig. 10).
3. If top of foam element is dirty, remove it from air cleaner body (Fig. 10). Clean thoroughly.

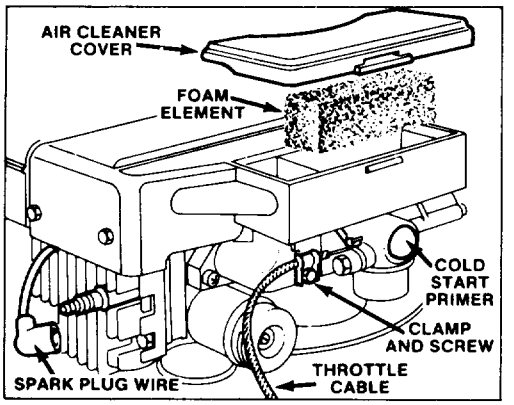

Figure 10

A. WASH foam element in a solution of liquid soap and warm water. Squeeze to remove dirt, but do not twist because foam may tear. Rinse thoroughly in clear water.
B. DRY by wrapping in a clean rag. Squeeze rag and foam element to dry.
C. SATURATE element with 5 teaspoons (25 ml) of SAE 30 engine oil. Squeeze element to remove excess oil and to distribute oil thoroughly. A damp element is desirable.
4. Reinstall foam element and air cleaner cover.

IMPORTANT: Do not operate engine without air cleaner element because extreme engine wear and damage will likely result.

REPLACING SPARK PLUG

Use a Champion CJ-8 spark plug or equivalent. Correct air gap is 0.030" (0.762 mm). Remove plug after every 25 operating hours and check its condition.

1. Stop engine and pull wire off spark plug (Fig. 10).
2. Clean around spark plug and remove plug from cylinder head (Fig. 10).

IMPORTANT: Replace a cracked, fouled or dirty spark plug. Do not sand blast, scrape or clean electrodes because engine damage could result from grit entering cylinder.

3. Set air gap at 0.030" (0.762 mm) (Fig. 11). Install correctly gapped spark plug and gasket seal. Tighten plug firmly to 18 ft-lb (24.4 N-m).

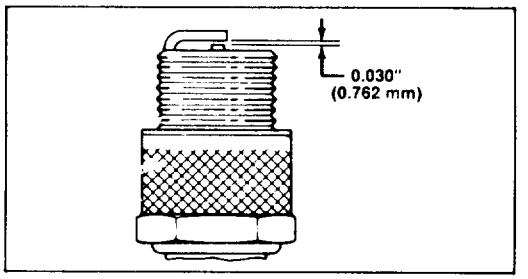

Figure 11

ADJUSTING THROTTLE

Throttle control adjustment may be required if engine does not start or stop. Whenever a new throttle control cable is installed, throttle must be adjusted.

1. Stop engine and pull wire off the spark plug.
2. Move throttle control to SLOW.
3. Loosen cable clamp screw until throttle cable slides (Fig. 10). Move carburetor control arm as far to the left as possible. Pull throttle cable slightly to remove any slack and tighten cable clamp screw to lock adjustment in place.

DRAINING GASOLINE

1. Stop engine. Pull wire off spark plug.
2. Squeeze ends of fuel line clip (Fig. 12) and slide clip down fuel line. Carefully pull fuel line off fitting and allow gasoline to flow into drain pan (Fig. 12).
3. After tank is drained, install fuel line on fuel tank fitting and secure in place with the clip.

MAINTENANCE

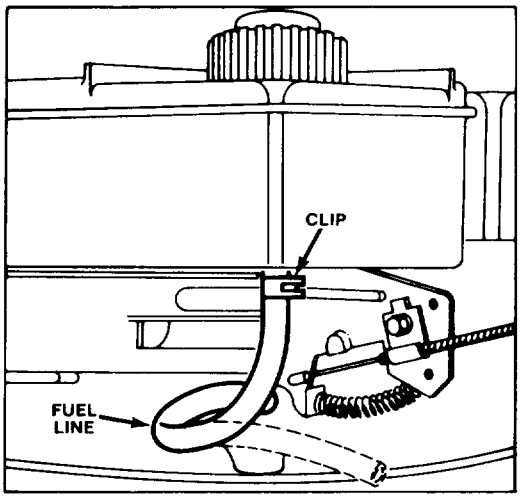

Figure 12

CHANGING CRANKCASE OIL

Change oil after the first 2 operating hours and after every 25 hours thereafter. Since warm oil drains better and carries more contaminants than cold oil, run engine for a minute or so before draining oil.

1. Stop engine and pull wire off spark plug.

2. Remove grass bag. Drain gasoline from fuel tank: refer to Draining Gasoline, page 7.

3. Remove dipstick. Tip mower forward and empty all oil into drain pan (Fig. 13). Tip mower down and up a few times to ensure oil drains completely.

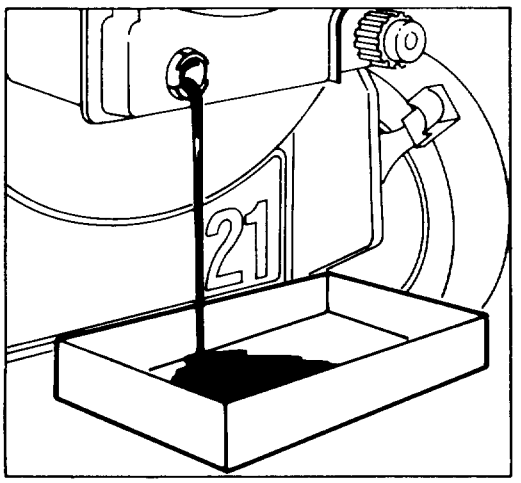

Figure 13

4. After draining, fill engine with fresh oil: refer to Fill Crankcase With Oil, page 4.

CLEANING MOWER HOUSING

To assure optimum performance, keep underside of mower housing and inside of discharge area clean.

1. Drain gasoline from fuel tank: refer to Draining Gasoline, page 7.

2. Tip mower on its left side. Avoid rotating blade because starting problems may result.

3. Remove dirt and grass clippings that stick to housing by spraying it with a garden hose. Scrape out remaining debris with hardwood scraper. Avoid burrs and sharp edges.

INSPECTING, REMOVING, SHARPENING BLADE

1. Stop engine and pull wire off spark plug.

2. Drain fuel tank: refer to Draining Fuel, page 7.

3. Tip mower on its left side (Fig. 14).

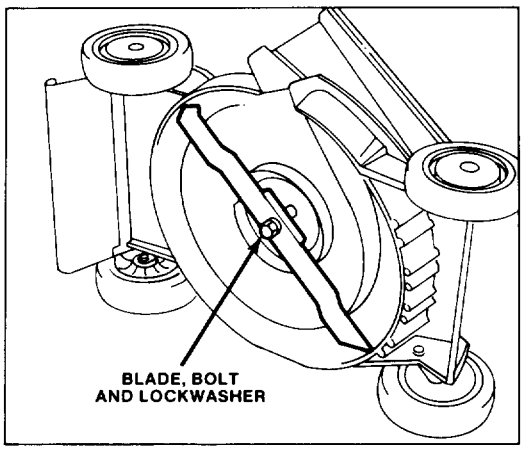

Figure 14

4. INSPECTING BLADE — Carefully examine blade for sharpness and wear, especially where flat and curved parts meet (Fig. 15A). Since sand and abrasive material can wear away the metal that connects the flat and curved parts of the blade, check blade before using the mower. If a slot or wear is noticed (Fig. 15B & C), replace blade. Refer to step 5.

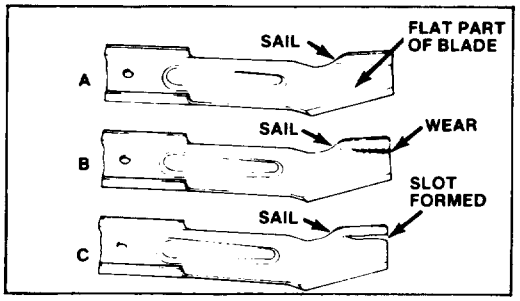

Figure 15

⚠ CAUTION

If blade is allowed to wear, a slot may form near the sail. Eventually a piece of blade may break off resulting in serious injury to yourself or a bystander.

5. REMOVING BLADE — Grasp end of blade using as rag or thickly padded glove. Remove blade bolt, lockwasher and blade (Fig. 14).

Note: For optimum performance, install new blade before cutting season begins. During the year file down small nicks to maintain the cutting edge.

6. SHARPENING BLADE — Using a file, sharpen top side of blade and maintain original cutting angle (Fig. 16). The blade will remain balanced if same amount of material is removed from both cutting edges.

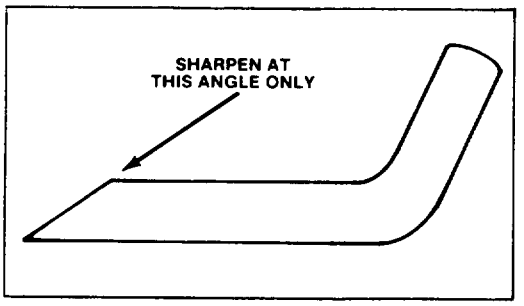

Figure 16

IMPORTANT: Check balance of blade by putting it on a blade balancer. An inexpensive balancer can be purchased at a hardware store. A balanced blade will stay in horizontal position and an unbalanced blade will settle to the heavy side. If blade is not balanced, file more metal off cutting edge on heavy end of blade.

7. Install sharp, balanced blade with lockwasher and blade bolt. Sail part of blade must point toward top of mower housing to assure correct installation. Tighten the blade bolt to 50 ft-lb (68 N·m).

LUBRICATION

After every 25 operating hours or when season ends, front and rear wheels must be lubricated.

1. OIL FRONT AND REAR WHEELS — Apply 2 or 3 drops of light oil on inside and outside of wheel bolts. Spin wheels to distribute oil into bushings.

2. GREASE FRONT AXLE PIVOTS (Fig. 17) — Adjust height-of-cut to 3-inch setting and loosen wheel bolt to get additional clearance around grease fitting. Wipe grease fitting with clean rag. Install grease gun onto fitting and gently apply 2 or 3 pumps of #2 Multi-Purpose Lithium Base Grease. Excess pressure may damage seals.

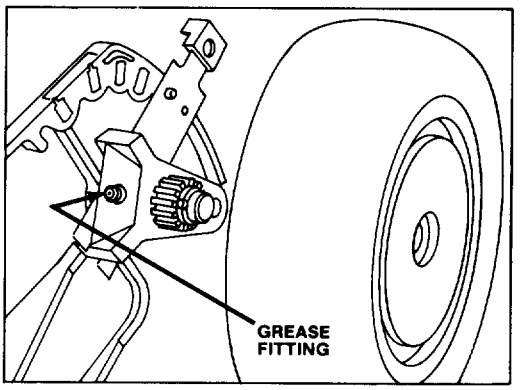

Figure 17

CHECKING TRANSMISSION OIL LEVEL

The transmission is filled with #90 gear oil that has a GL-5 or GL-6 rating. Level of gear oil must be checked at least every 25 operating hours, before storage and before the mowing season begins.

1. Stop engine and pull wire off spark plug. Remove two screws and lift off transmission cover.

2. CHECKING GEAR OIL LEVEL (Fig. 18) — Position mower on level surface and clean around plastic plug. Remove plastic plug and watch for oil to ooze out of hole. If gear oil oozes out, quickly install plastic plug because oil is at proper level. If oil does not flow, add gear oil: see step 3.

IMPORTANT: Low oil level may indicate a leak where axle goes through both sides of transmission case. Transmission case should be inspected by an Authorized TORO Service Dealer.

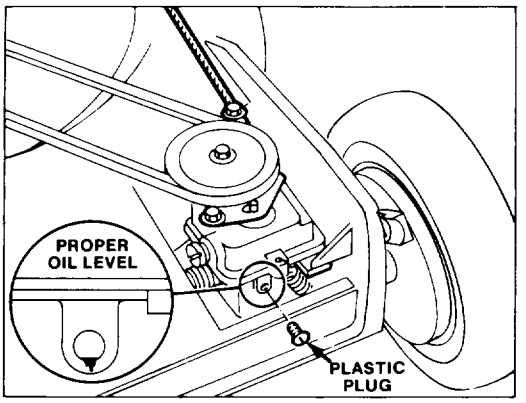

Figure 18

3. ADDING GEAR OIL — Slowly add #90 gear oil that has a GL-5 or GL-6 rating. Stop when oil oozes out of hole in gear case, and quickly install plastic plug. DO NOT OVERTIGHTEN PLASTIC PLUG BECAUSE THREADS MAY STRIP.

Note: A clean Plews type oil container or any other clean container with a small tip can be used to add oil. Using a dirty oil container could contaminate transmission case and eventually cause damage.

4. Install transmission cover.

ADJUSTING WHEEL DRIVE CONTROL

If front wheels do not engage and disengage or if new wheel drive control cable is installed, an adjustment is required.

1. Stop engine and pull wire off spark plug.
2. Remove transmission cover.
3. ADJUSTMENT (Fig. 19) — Loosen cable clamp screw until cable conduit slides. Move handle-mounted wheel drive control to DISENGAGE detent. Move shift arm toward clamp screw and hold in place. Pull cable conduit to remove slack and tighten clamp screw.
4. Install transmission cover.

ADJUSTING BLADE BRAKE

Whenever a new blade brake cable assembly is installed, an adjustment is required.

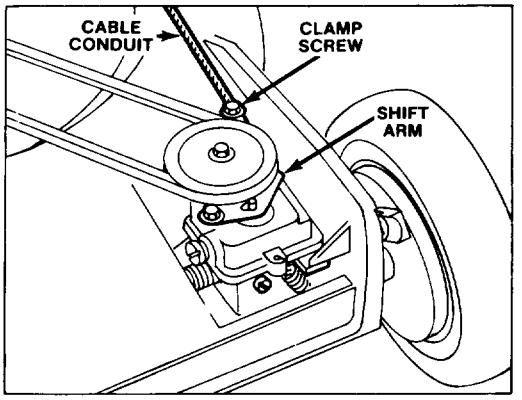

Figure 19

1. Stop engine and pull wire off spark plug.
2. CHECK ADJUSTMENT (Fig. 20) — Move control bar toward handle until slack in wire is removed. Gap between brake lever and handle must be 1/8" - 3/16". See step 3 for adjustment.
3. ADJUST CABLE CONDUIT — Loosen nut on cable bracket (Fig. 20). Insert 1/8" - 3/16" object between brake lever and handle. Pull down on cable conduit until slack is removed. Then tighten nut.

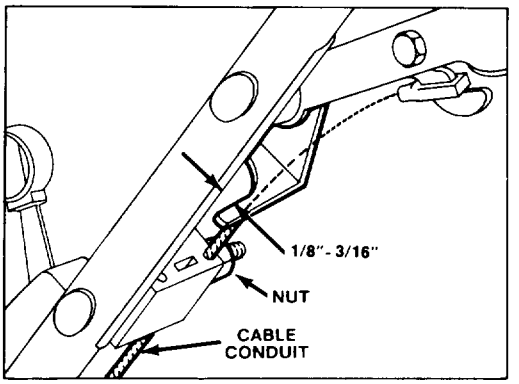

Figure 20

PREPARING MOWER FOR STORAGE

1. Drain fuel: refer to Draining Gasoline, page 7. Then start engine and let it idle until all fuel is consumed and engine stops. If fuel is not drained completely, gum-like varnish deposits will form and cause poor engine operation, even starting problems.
2. Drain oil: refer to Changing Crankcase Oil, page 8. After oil is drained, do not fill crankcase with oil until the following steps (3-9) are completed.

3. Remove spark plug and pour 2 teaspoons of 10W30 oil into hole in cylinder. Pull starter rope slowly to coat inside of cylinder. Install spark plug and tighten to 18 ft-lb (24.4 N·m). DO NOT INSTALL WIRE ON SPARK PLUG.

4. Clean underside of housing: refer to Cleaning Mower Housing, page 8.

5. Check condition of blade: refer to Inspecting/Removing/Sharpening Blade, page 8.

6. Tighten all nuts, bolts and screws.

7. Clean dirt and chaff from cylinder, cylinder head fins and blower housing. Also remove grass clippings, dirt and grime from external parts of the engine, shrouding and top of mower housing.

8. Clean air cleaner: refer to Servicing Air Cleaner, page 7.

9. Lubricate the wheels: refer to Lubrication, page 9.

10. Check transmission oil: refer to Checking Transmission Oil, page 9.

11. Touch up all rusted or chipped paint surfaces. Toro Re-Kote paint is available from an Authorized TORO Service Dealer.

12. Fill crankcase with oil: refer to Fill Crankcase With Oil, page 4.

TORO SERVICE SUPPORT

If help — concerning safety, set-up, operation and maintenance or troubleshooting — is ever needed, contact the local Authorized TORO Service Dealer or Distributor. Refer to the "Yellow Pages" for assistance. In addition to skilled service technicians, the dealer and distributor have factory approved accessories and replacement parts. Keep your TORO all TORO. Buy genuine TORO replacement parts and accessories.

OPTIONAL SPARK ARRESTOR

If a spark arrestor is required because of local, state or federal regulations, it may be purchased at your local Authorized Tecumseh Service Dealer. If mower is operated on any California forest, brush or grass covered land without a properly operating spark arrestor, the operator is violating state law, Section 4442 Public Resources Code. Order the following parts:

1 — Muffler-Spark Arrestor	— Part No. 391020
1 — Deflector	— Part No. 34422
1 — Screw	— Part No. 650643

PRODUCT IDENTIFICATION

A model number and a serial number decal is located at rear of mower housing, near the discharge door. Always refer to specific numbers on this decal in correspondence or when replacement parts are needed.

The Toro Promise

A Two Year Limited Warranty
On All
Gasoline Powered Consumer Products

The Toro Company promises to repair these TORO Products if defective in materials or workmanship. The following time periods from the date of purchase apply:

Residential Product	2 Years
Residential Products Used Commercially . . .	45 Days

The costs of parts and labor are included, but the customer pays the transportation costs. Just return any residential product to an Authorized TORO Service Dealer or TORO Distributor.

Should you feel your TORO is defective and wish to rely on The Toro Promise, the following procedure is recommended:

1. Contact any Authorized TORO Service Dealer, TORO Master Service Dealer, or TORO Distributor (the Yellow Pages of your telephone directory is a good reference source).
2. He will either instruct you to return the product to him or recommend another Authorized TORO Service outlet which might be more convenient.
3. Bring the product along with your original sales slip, or other evidence of purchase date, to the service dealer.
4. The servicing dealer will inspect the unit, advise you whether the product is defective and, if so, make all repairs necessary to correct the defect without extra charge to you.

If for any reason you are dissatisfied with the dealer's analysis of the defect or the service performed, you may contact us.

Write:

TORO Customer Service Department
8111 Lyndale Avenue South
Minneapolis, Minnesota 55420

The above remedy of product defects through repair by an Authorized TORO Service Dealer is the purchaser's sole remedy for any defect.

THERE IS NO OTHER EXPRESS WARRANTY. ALL IMPLIED WARRANTIES OF MERCHANTABILITY AND FITNESS FOR USE ARE LIMITED TO THE DURATION OF THE EXPRESS WARRANTY.

Some states do not allow limitations on how long implied warranty lasts, so the above limitation may not apply to you.

This Warranty applies only to parts or components which are defective and does not cover repairs necessary due to normal wear, misuse, accidents, or lack of proper maintenance. Regular, routine maintenance of the unit to keep it in proper operating condition is the responsibility of the owner.

All warranty repairs reimbursable under The Toro Promise must be performed by an Authorized TORO Service Dealer using Toro approved replacement parts.

Repairs or attempted repairs by anyone other than an Authorized TORO Service Account are not reimbursable under The Toro Promise. In addition, these unauthorized repair attempts may result in additional malfunctions, the correction of which is not covered by warranty.

THE TORO COMPANY IS NOT LIABLE FOR INDIRECT, INCIDENTAL OR CONSEQUENTIAL DAMAGES IN CONNECTION WITH THE USE OF THE PRODUCT INCLUDING ANY COST OR EXPENSE OF PROVIDING SUBSTITUTE EQUIPMENT OR SERVICE DURING PERIODS OF MALFUNCTION OR NON-USE.

Some states do not allow the exclusion of incidental or consequential damages, so the above exclusion may not apply to you.

This warranty gives you specific legal rights, and you may also have other rights which vary from state to state.

COUNTRIES OTHER THAN THE UNITED STATES OR CANADA

Customers who have purchased TORO products exported from the United States or Canada should contact their TORO Distributor (Dealer) to obtain guarantee policies for your country, province or state. If for any reason you are dissatisfied with your Distributor's service or have difficulty obtaining guarantee information, contact the TORO importer. If all other remedies fail, you may contact us at The Toro Company.

Compliance with Radio Interference Regulations Certified.
Certifie Conforme au Reglement sur le Brouillage Radioelectrique.

Litho in U.S.A.