Form No. 3382-758 Rev A

TORO®

Count on it.

Parts Catalog

Dingo® 220 Compact Utility Loader

Model No. 22317—Serial No. 314000001 and Up

Register at www.Toro.com.
Original Instructions (EN)

3382-758 A

Ordering Replacement Parts

To order replacement parts, please supply the part number, the quantity, and the description of each part desired.

Understanding Reference Numbers

Each identified part in an illustration has a reference number. The reference number for a part also appears in the parts list, along with other information about the part.

This catalog uses two special reference number formats, one to indicate parts in a service assembly and another to indicate the quantity of a given part in an illustration.

Service Assembly Reference Numbers

Parts in service assemblies have reference numbers in the form a:b. The a represents the reference number of the entire service assembly and the b represents a sequential number unique to each part within the service assembly.

For example, a wheel assembly might be identified by reference number 6, the tire by 6:1, the valve by 6:2, and the wheel by 6:3. When you order the assembly identified by reference number 6, you receive all parts identified by reference numbers 6:1,6:2, and 6:3. However, you may also order any part individually. Reference numbers of this type appear in illustration and in parts lists.

Reference Numbers Indicating Quantity

In an illustration, if a reference number indicates more than one part, the reference number has the form nX y. The n represents the quantity of the part, the X is the multiplication symbol, and the y represents the reference number.

For example, in an illustration, the reference number 2X 37 means that two of the parts identified by reference number 37 are indicated.

List of Abbreviations

AR: as required

ASM: assembly

BBC: blade brake control

BHTF: button head thread forming

CARR: carriage

CCW: counter clockwise

CW: clockwise

DEG: degrees

DPA: Dual Point Adjustment

ECM: electronic control module

EXT: external

FH: flat head

GA: gauge

HD: heavy-duty

HF: hex flange

HH: hex head

HHF: hex head flange

HHFTF: hex head flange thread forming

HJ: hex jam

HLH: hex lag head

HOC: height-of-cut

HSBH: hex socket button head

HSFH: hex socket flat head

HSH: hex socket head

HWH: hex washer head

HWHTF: hex washer head thread forming

HYD: hydraulic

LH: left hand

LP: Liquefied Petroleum Gas

LPG: Liquefied Petroleum Gas

NI: nylon insert

NPTF: national pipe thread fine

PFH: phillips flat head

PPH: phillips pan head

PPHTF: phillips pan head thread forming

PRH: phillips round head

PTH: phillips truss head

PTO: power-take-off

RH: right hand

ROPS: roll-over protection system

RRB: rear roller brush

SFH: slotted fillister head

SHH: slotted hex head

SHWH: slotted hex washer head

SPH: slotted pan head

SQH: square head

SRH: slotted round head

STD: standard

TAP: self tapping

TTH: torx truss head

Contents

Frame and Loader Arm Assembly 4
Front Wheel Assembly 5
Rear Wheel Assembly 6
Hydraulic Motor Assembly No. 99-3052 7
Engine Assembly 8
Tandem Hydraulic Pump Assembly No. 108-4710 10
Hydraulic Assembly 11
Hydraulic Valve Assembly 12
Hydraulic Selector Valve Assembly No. 99-3072 14
Auxiliary Hydraulic Valve Assembly No. 99-3077 15
Hydraulic Traction Assembly 16
Hydraulic Valve Assembly No. 105-6246 18
Hydraulic Cylinder Assembly 19
Hydraulic Cylinder Assembly No. 117-1834 20
Electrical Assembly 21
Fuel Tank Vent Assembly 22
Thigh Support Assembly 23
Attachments and Accessories 24

© 2014—The Toro® Company
8111 Lyndale Avenue South
Bloomington, MN 55420

Contact us at www.Toro.com.
Printed in the USA.
All Rights Reserved

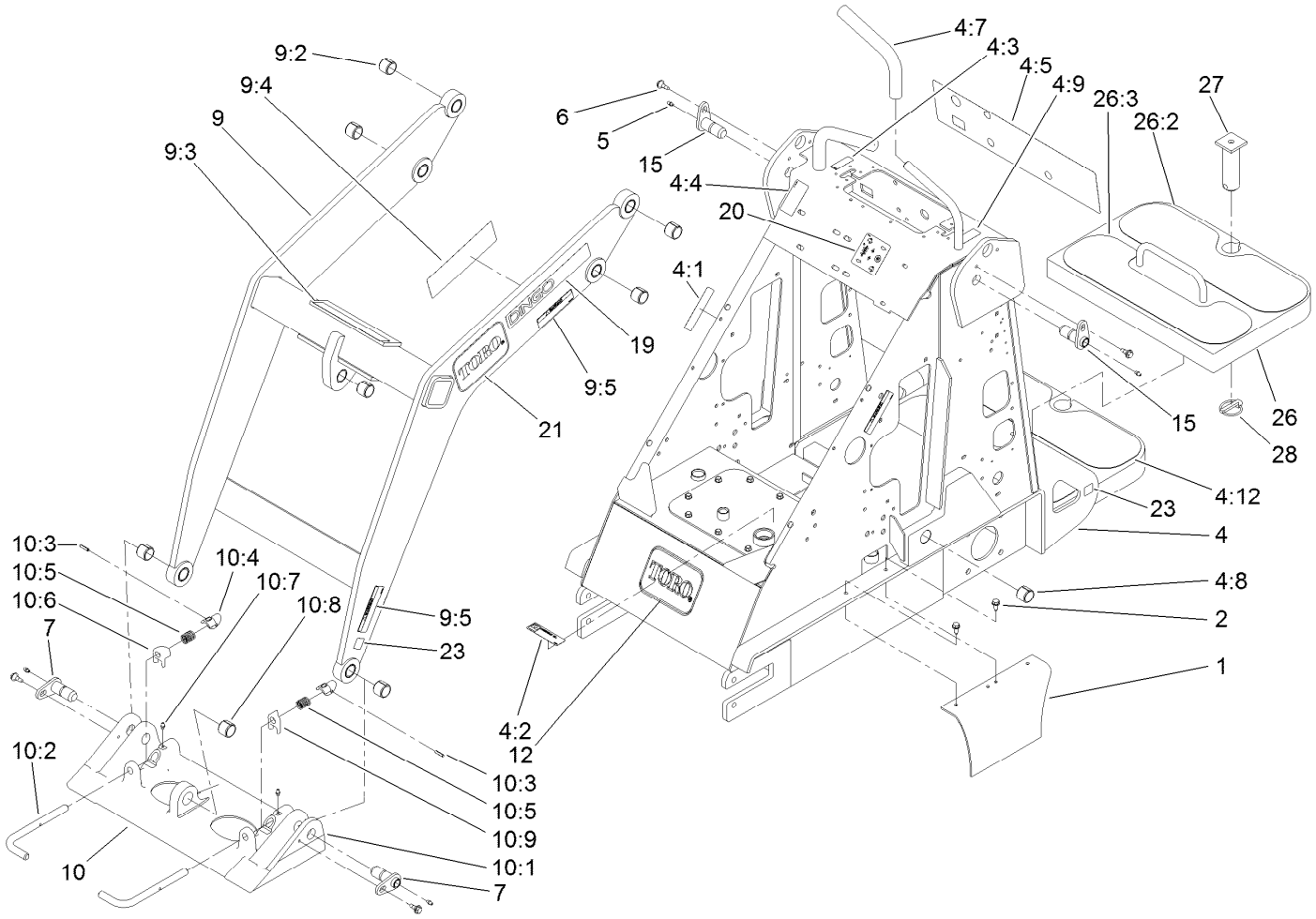

Frame and Loader Arm Assembly

Ref.	Part Number	Qty.	Description
1	98-4669-01	2	Cover-Chain
2	32144-70	4	Screw-HWHTF
4	108-9700	1	Frame ASM
4:1	100-6141	2	Decal-Pinch
4:2	93-6686	1	Decal-Oil, HYD
4:3	94-2551	1	Decal-Choke
4:4	98-4677	1	Decal-Power, Auxiliary
4:5	108-9732	1	Decal-Panel, Control
4:7	98-4845	2	Grip-Cushion
4:8	98-4871	2	Bushing-Tension
4:9	98-8219	1	Decal-Throttle
4:12	98-9947	2	Tread-Foot
5	302-5	4	Fitting-Grease
6	99-5105	4	Bolt-Shoulder
7	112-2609	2	Pin-Pivot
9	106-8155	1	Loader ASM
9:2	98-4871	7	Bushing-Tension
9:3	98-4682	1	Decal-Caution
9:4	98-9051	1	Decal-Danger
9:5	100-6141	4	Decal-Pinch
10	115-0788	1	Quick Attach ASM

Ref.	Part Number	Qty.	Description
10:1	115-0774-03	1	Mount-Qtach
10:2	105-8367	2	Pin-Locking
10:3	3285-1	2	Pin-Grooved
10:4	105-0246	2	Cam
10:5	98-4694	2	Spring-Compression
10:6	104-5909	1	Stop-RH
10:7	302-5	2	Fitting-Grease
10:8	98-4871	1	Bushing-Tension
10:9	104-5903	1	Stop-LH
12	62-5550	1	Decal
15	120-5363	2	Pin-Pivot
19	105-8426	2	Decal
20	108-9716	1	Decal-Selector, Speed
21	93-7340	2	Decal
23	93-9084	6	Decal-Point, Lift
26	112-4947	1	Counterweight ASM
26:2	98-9947	1	Tread-Foot
26:3	112-4948	1	Tread
27	99-8638	1	Pin ASM
28	99-9978	1	Pin-Lynch

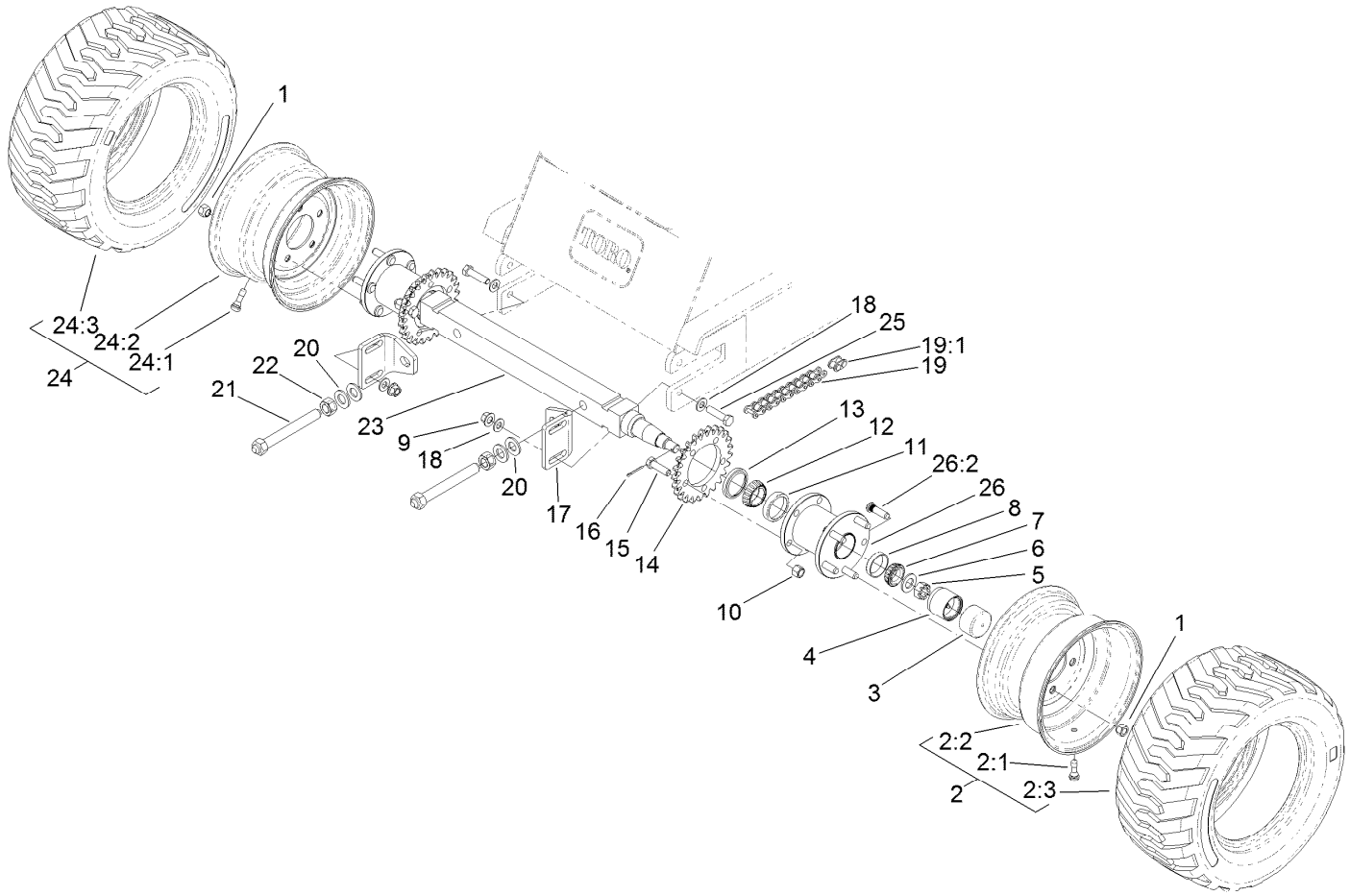

Front Wheel Assembly

Ref.	Part Number	Qty.	Description
1	242-50	10	Nut-Lug
2	98-2747	1	LH Wheel And Tire ASM
2:1	232-27	1	Stem-Valve
2:2	98-2748	1	Wheel
2:3	98-2749	1	Tire
3	100-3809	2	Cap-Protector, Bearing
4	100-3769	2	Protector-Bearing
5	32136-5	2	Nut-Hex, Slotted
6	3256-28	2	Washer-Flat
7	254-94	2	Bearing-Cone, Tapered
8	254-72	2	Bearing-Cup, Tapered
9	99-5107	4	Nut-Lock
10	3296-23	14	Nut-Lock, NI
11	254-107	2	Cup-Bearing, Tapered
12	254-106	2	Cone-Bearing, Tapered
13	98-4705	2	Seal-Bearing, Wheel
14	98-9937	2	Sprocket-25T

Ref.	Part Number	Qty.	Description
15	325-7	10	Screw-HH
16	3272-12	2	Pin-Cotter
17	99-5106-03	2	Bracket-Axle
18	3256-26	8	Washer-Flat
19	98-4906	2	Chain-Roller
19:1	98-9089	1	Link-Connecting
20	3256-28	4	Washer-Flat
21	98-4706	2	Bolt-Tension
22	3217-12	2	Nut-Hex
23	98-4825	1	Axle
24	99-1447	1	RH Wheel And Tire ASM
24:1	232-27	1	Stem-Valve
24:2	98-2748	1	Wheel
24:3	98-2749	1	Tire
25	325-8	4	Screw-HH
26	100-9989	2	Front Hub ASM
26:2	10-6830	5	Stud-Type, Drive

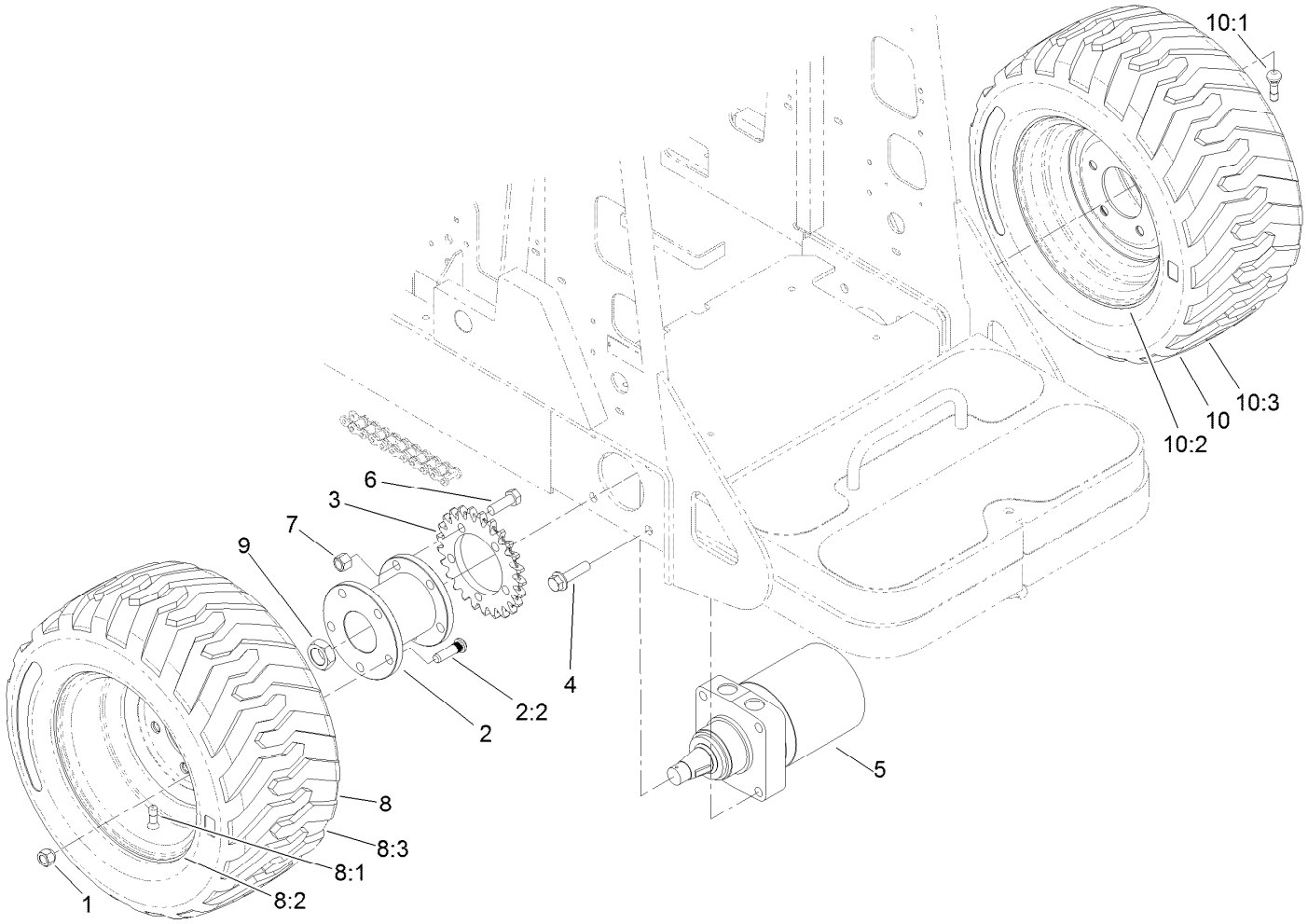

Rear Wheel Assembly

Ref.	Part Number	Qty.	Description
1	242-50	10	Nut-Lug
2	100-9990	2	Rear Hub ASM
2:2	10-6830	5	Stud-Type, Drive
3	98-9937	2	Sprocket-25T
4	3234-27	8	Screw-HHF
5	99-3052	2	HYD Motor ASM
6	325-7	10	Screw-HH
7	3296-23	10	Nut-Lock, NI
8	98-2747	1	LH Wheel And Tire ASM

Ref.	Part Number	Qty.	Description
8:1	232-27	1	Stem-Valve
8:2	98-2748	1	Wheel
8:3	98-2749	1	Tire
9	106-8159	2	Nut-Lock
10	99-1447	1	RH Wheel And Tire ASM
10:1	232-27	1	Stem-Valve
10:2	98-2748	1	Wheel
10:3	98-2749	1	Tire

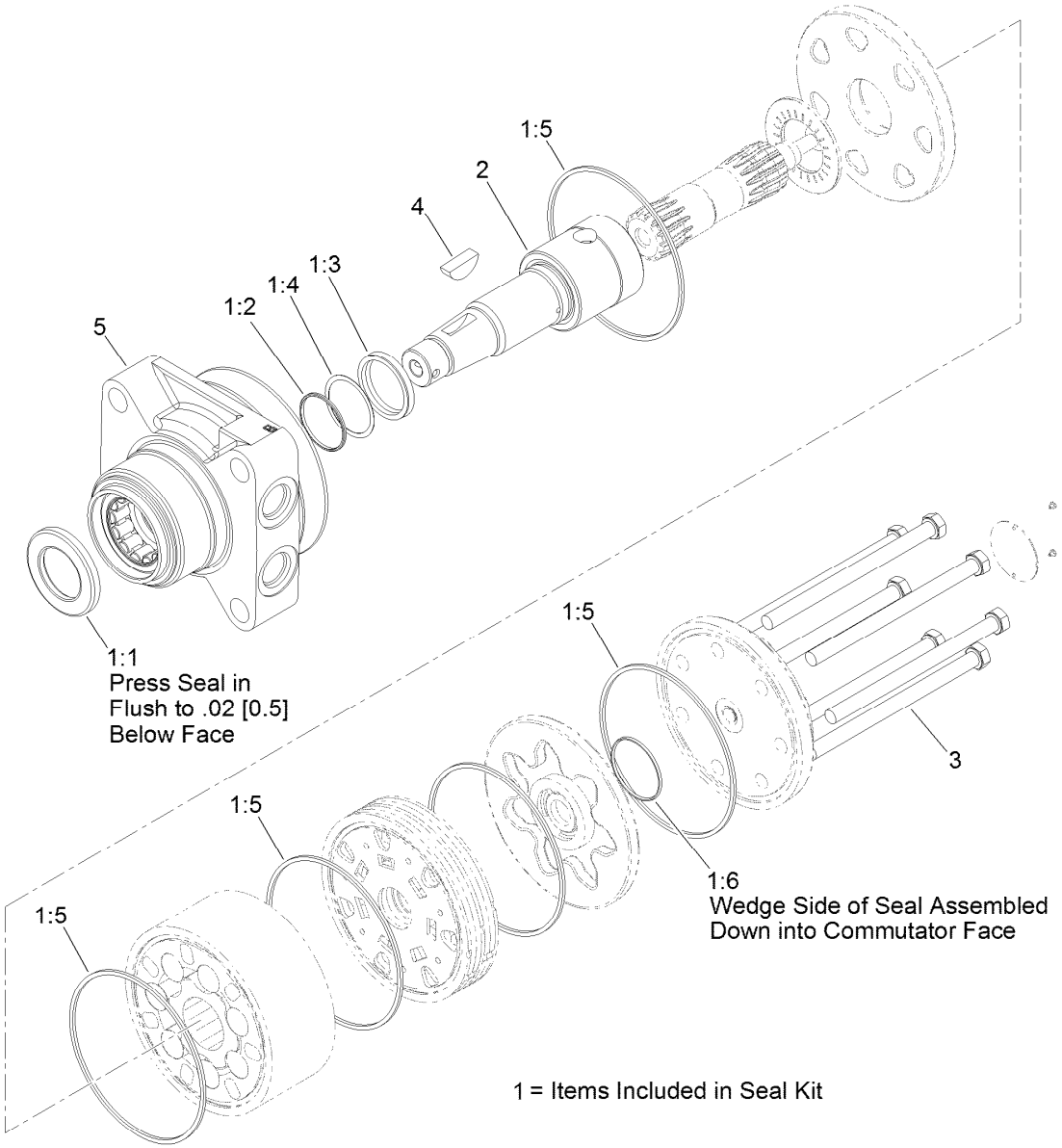

Hydraulic Motor Assembly No. 99-3052

Ref.	*Part Number*	*Qty.*	*Description*
1	94-8178	1	Seal Kit
1:1		1	Seal-Dirt And Water ●
1:2		1	Backup-Ring ●
1:3		1	Seal-Shaft ●
1:4		1	Washer-Backup ●
1:5		5	Seal-Square, Ring (Inner) ●
1:6		1	Seal-Commutator ●
2	99-3090	1	Shaft-Coupling
3	99-3091	7	Screw-Cap, HH
4	3257-42	1	Key-Woodruff
5	120-5392	1	Motor Housing ASM

● Not serviced separately

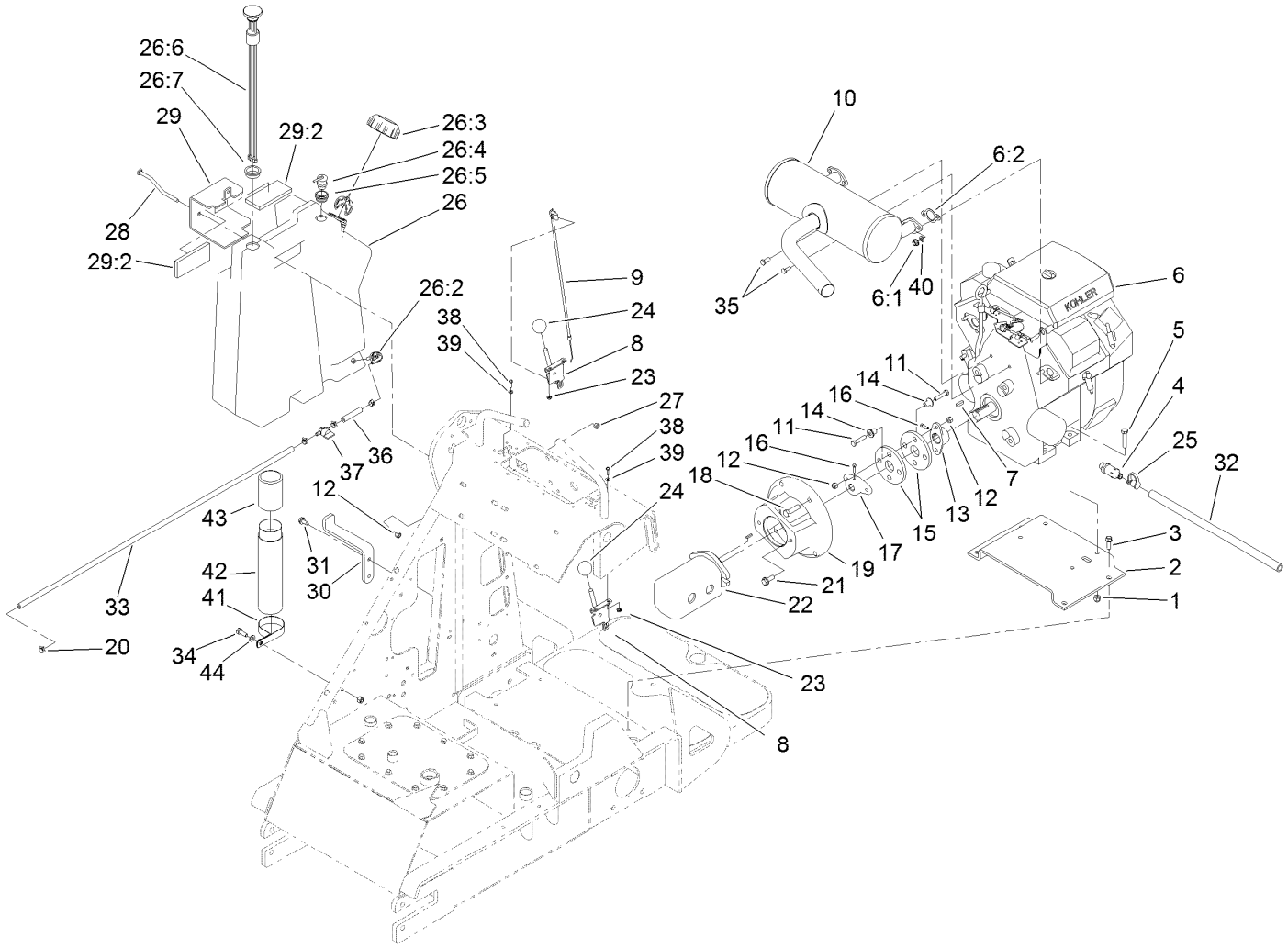

Engine Assembly

Ref.	Part Number	Qty.	Description
1	3296-39	4	Nut-Lock, NI
2	98-4666-03	1	Mount-Engine
3	95-1726	4	Screw-Taptite
4	92-6877	1	Valve-Drain, Oil
5	323-9	4	Screw-HH
6	117-1745	1	Engine-Kohler, Ch20S
6:1	92-6780	4	Nut-HF
6:2	110-6697	2	Gasket-Exhaust
7	10-7070	1	Key-Square
8	108-9730	2	Lever-Control
9	108-4718	2	Cable-Control
10	105-8381	1	Muffler
11	322-7	4	Screw-HH
12	3296-29	5	Nut-Lock, NI
13	110-5236	1	Hub-Engine
14	71-4411	4	Spacer
15	115-4523	2	Coupling-Rubber
16	3241-6	4	Screw-SQH
17	98-4701	1	Hub-Pump
18	324-6	4	Screw-HH
19	98-2751-03	1	Mount-Pump

Ref.	Part Number	Qty.	Description
20	2412-98	4	Clamp-Hose
21	66-9300	2	Screw-HHF
22	108-4710	1	HYD Pump ASM
23	32149-7	4	Nut-Keps
24	233-42	2	Knob
25	354-79	1	Cap-Dust
26	119-5241	1	RH Fuel Tank ASM
26:2	103-2605	1	Fitting-Fuel, Bulkhead
26:3	115-7788	1	Cap-Fuel
26:4	114-0285	1	Valve-Rollover
26:5	114-0284	1	Grommet
26:6	104-5603	1	Gauge-Level, Fuel
26:7	95-8972	1	Grommet
27	32153-3	1	Nut-Hex, Side Deform
28	98-4657	1	Bolt-Mount
29	117-1802	1	RH Tank Mount ASM
29:2	117-1798	2	Pad-Foam
30	117-1777-03	1	Mount-Tank, Bottom
31	32144-70	2	Screw-HWHTF
32	98-4667	1	Hose
33	109-0273	1	Hose-Fuel

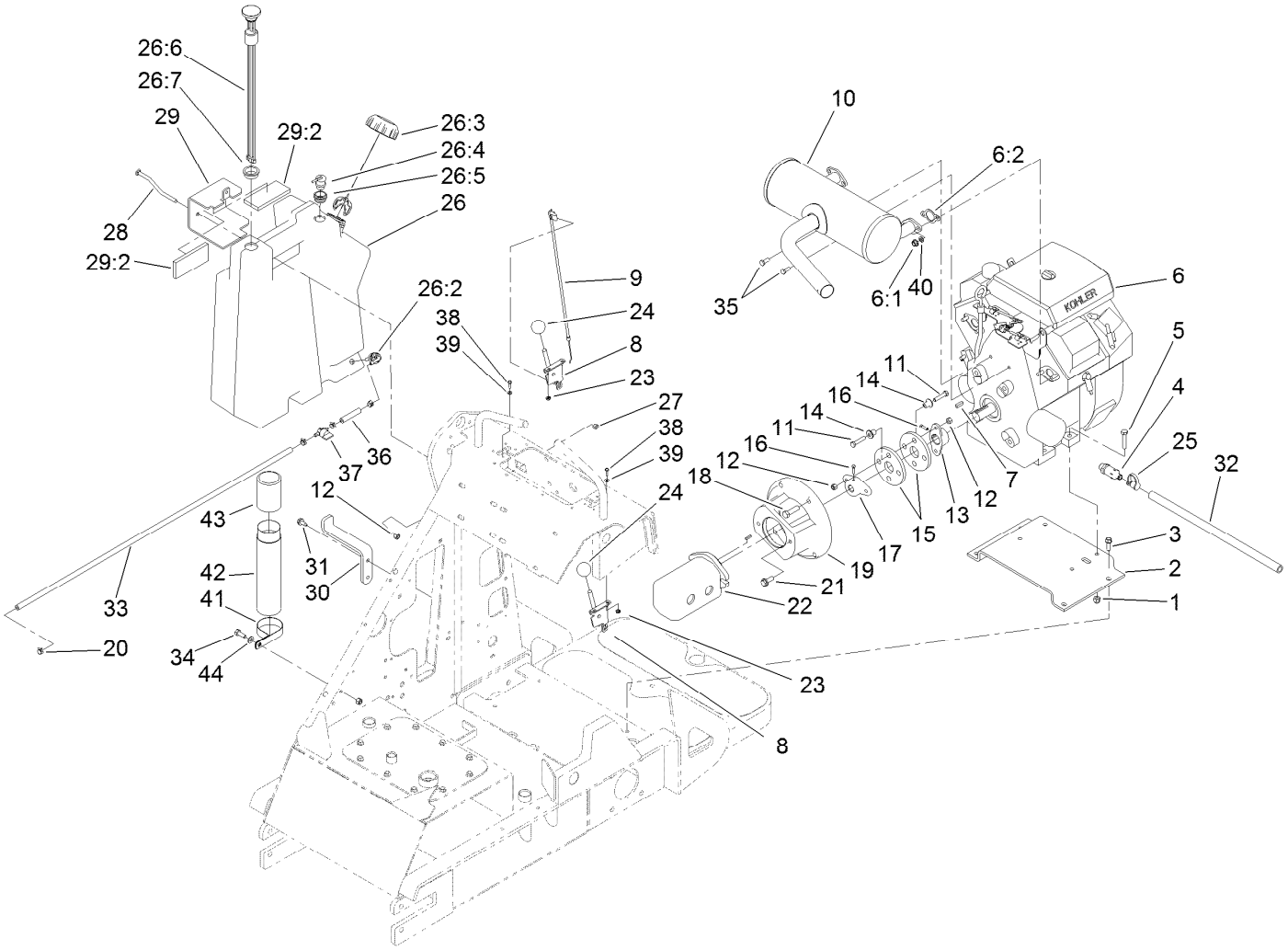

Engine Assembly (continued)

Ref.	Part Number	Qty.	Description
34	322-4	1	Screw-HH
35	33114-020	2	Screw-HH
36	109-0304	1	Hose-Fuel
37	1-603770	1	Valve-Fuel
38	3290-134	4	Screw
39	3256-51	4	Washer-Flat

Ref.	Part Number	Qty.	Description
40	3253-4	4	Washer-Lock
41	2412-133	1	R-Clamp
42	104-7050	1	Tube-Manual
43	104-7048	1	Cap-Housing
44	3256-23	1	Washer-Flat

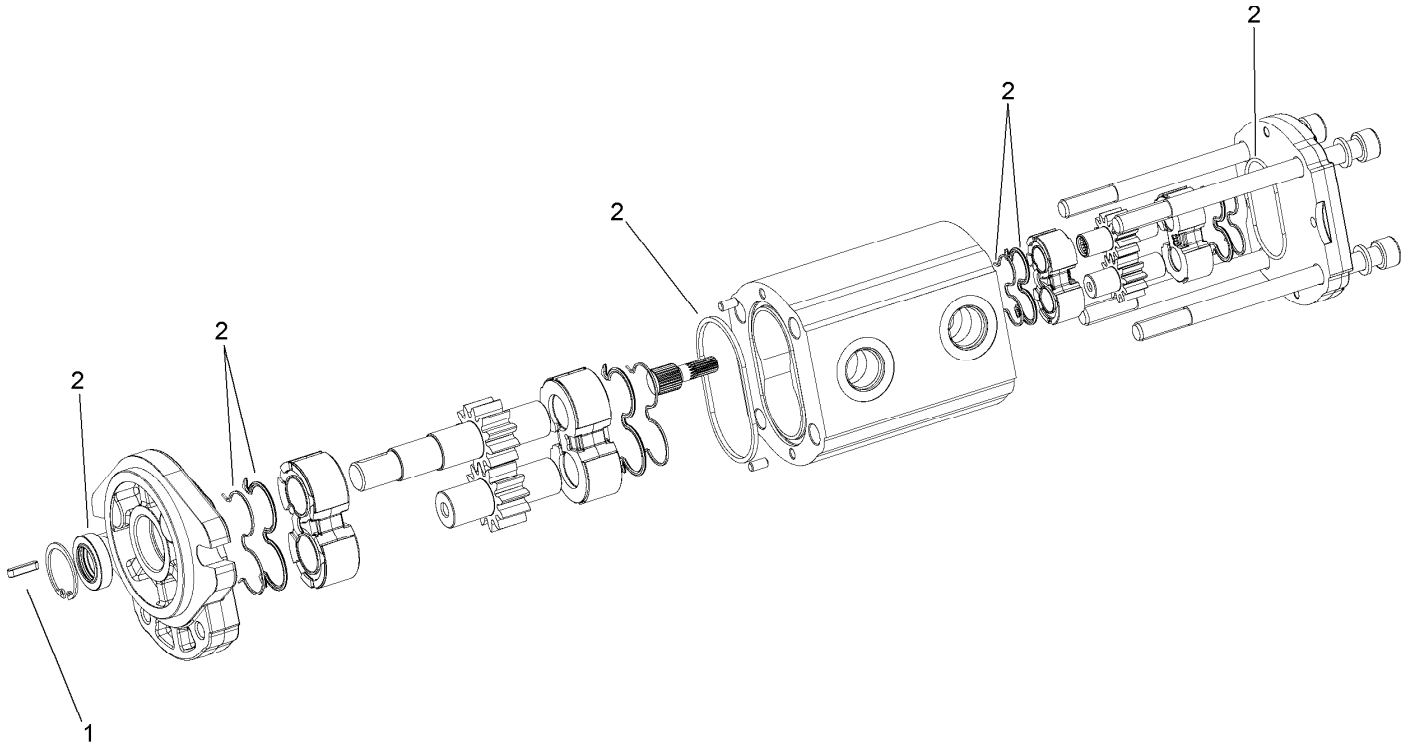

Tandem Hydraulic Pump Assembly No. 108-4710

Ref.	*Part Number*	*Qty.*	*Description*
1	98-4700	1	Key-Square
2	99-1353	1	Seal Kit

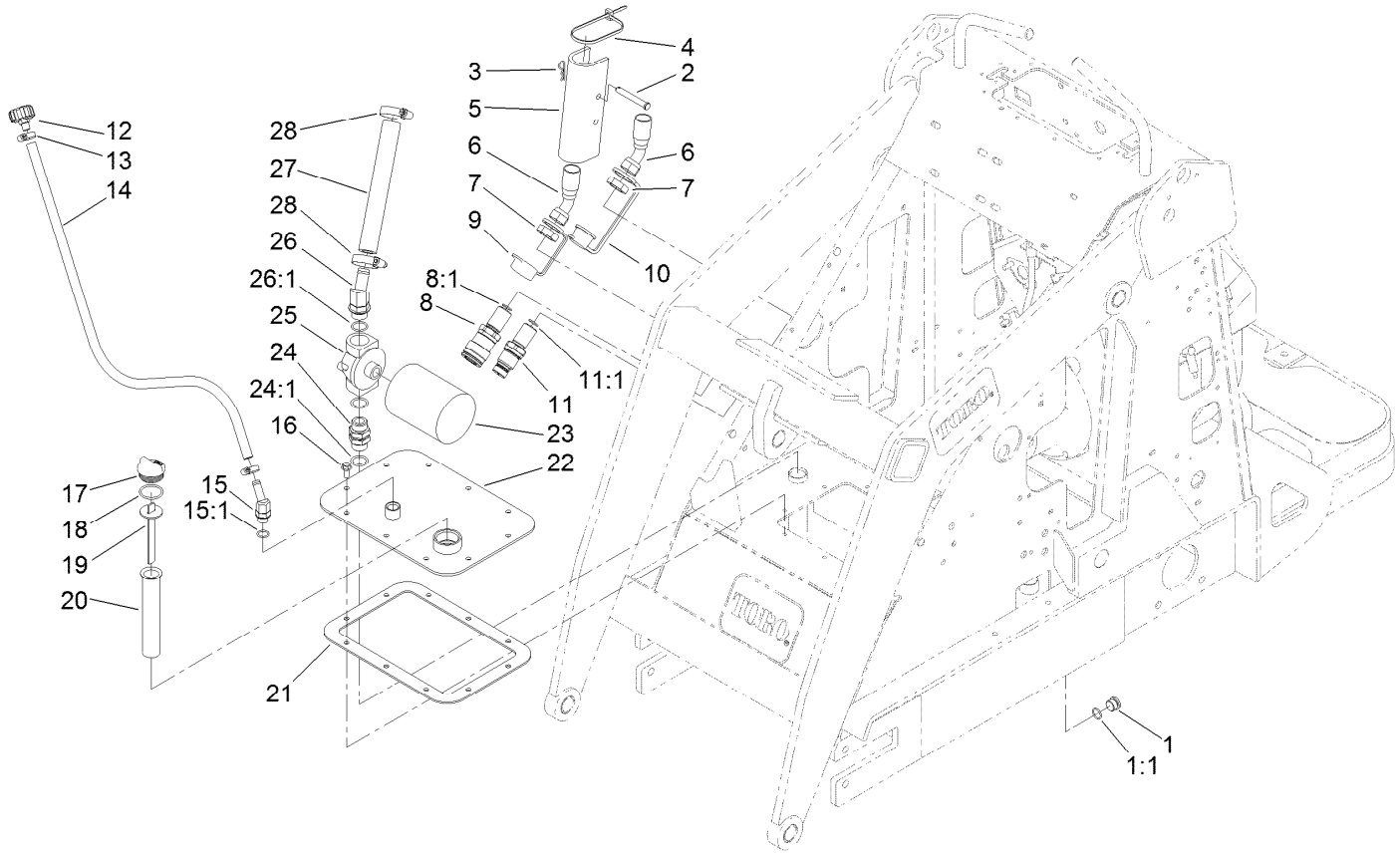

Hydraulic Assembly

Ref.	Part Number	Qty.	Description
1	353-988	1	Plug-Hex
1:1	237-79	1	O-Ring
2	283-52	2	Pin-Clevis
3	3290-467	2	Pin-Hair
4	3290-379	9	Tie-Cable
5	98-4675-01	2	Lock-Cylinder
6	100-8817	2	HYD Hose ASM
7	340-74	2	Nut-Lock, Bulkhead
8	105-8394	1	Bulkhead Coupler ASM
8:1	237-65	1	O-Ring
9	100-8816	1	Cap-Dust, Coupler
10	100-8815	1	Cap-Dust, Nipple
11	105-8395	1	Bulkhead Nipple ASM
11:1	237-65	1	O-Ring
11:2	100-6120	1	Seal Kit ●
12	68-6150	1	Breather
13	2412-36	2	Clamp-Hose
14	98-2708	1	Hose-Vent

Ref.	Part Number	Qty.	Description
15	354-126	1	Fitting-HYD, 45 DEG
15:1	237-79	1	O-Ring
16	98-9940	10	Screw
17	93-7498	1	Plug-Plastic
18	237-123	1	O-Ring
19	100-2097	1	Dipstick-Oil
20	61-2790	1	Filter-Screen
21	98-9927	1	Gasket-Cover
22	98-2709	1	Cover
23	54-0110	1	Filter-Oil, Transmission
24	98-9906	1	Fitting-Thread, Straight
24:1	237-81	2	O-Ring
25	92-5821	1	Head-Filter
26	354-127	1	Elbow-45 DEG
26:1	237-81	1	O-Ring
27	98-2713	1	Hose-Suction, HYD
28	2412-129	2	Clamp-Hose

● Not illustrated

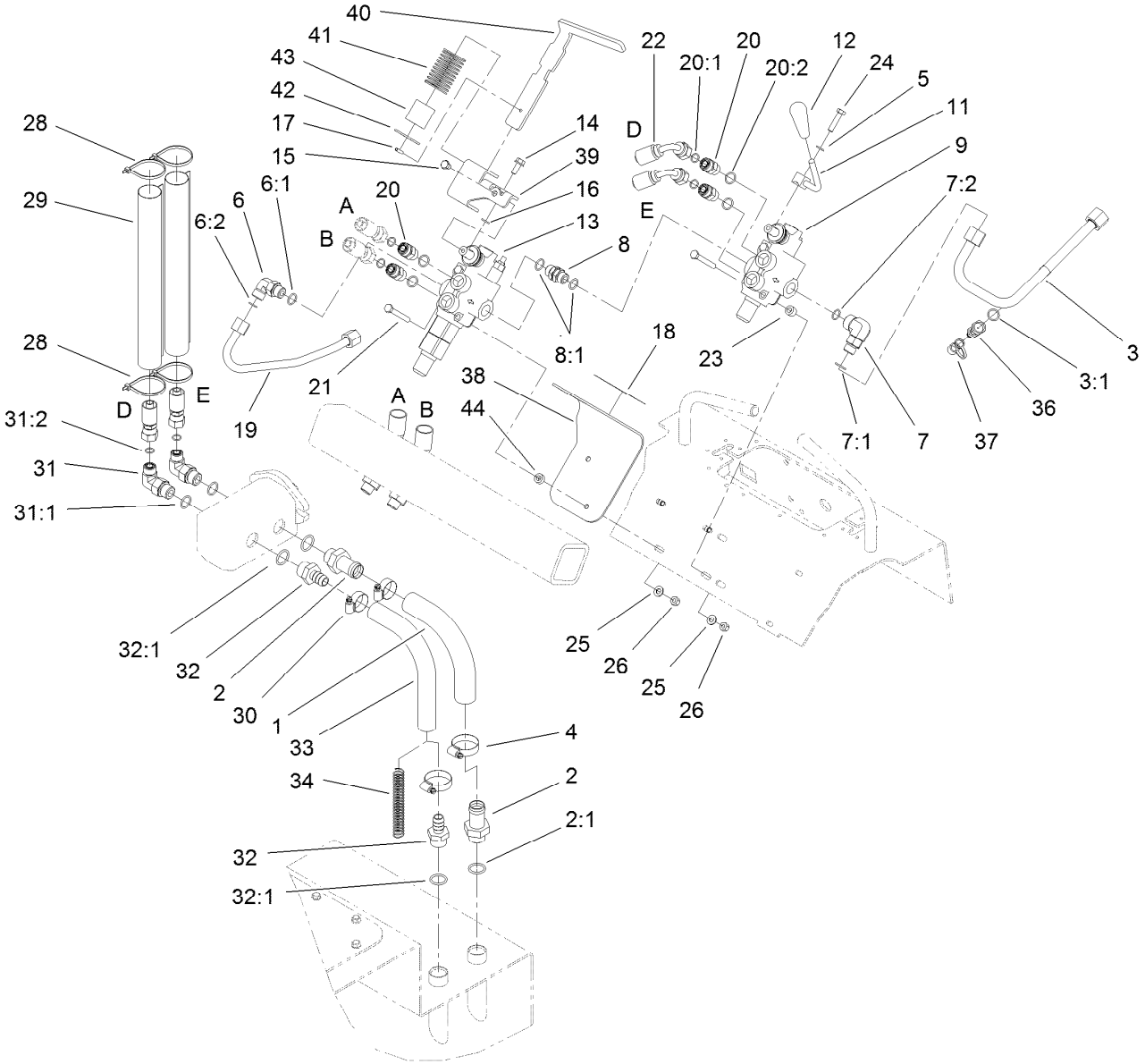

Hydraulic Valve Assembly

Ref.	Part Number	Qty.	Description
1	99-3046	1	Hose-Suction, Formed
2	99-3017	2	Fitting
2:1	237-81	1	O-Ring
3	108-4716	1	HYD Tube ASM
3:1	237-22	1	O-Ring
4	2412-111	2	Clamp
5	3253-4	1	Washer-Lock
6	340-98	1	Fitting-HYD, 90 DEG
6:1	237-79	1	O-Ring
6:2	237-30	1	O-Ring
7	340-153	1	Fitting-Elbow, 90 DEG
7:1	237-79	1	O-Ring
7:2	237-151	1	O-Ring
8	95-3209	1	Fitting-Thread, Straight
8:1	237-79	2	O-Ring
9	99-3072	1	HYD Selector Valve ASM
11	108-9709-03	1	Lever-Control
12	98-0152	1	Knob-Tapered
13	99-3077	1	HYD Auxiliary Valve ASM
14	33104-020	1	Screw-HHF
15	33114-010	1	Screw-HH

Ref.	Part Number	Qty.	Description
16	3253-4	1	Washer-Lock
17	32121-3	1	Pin-Spring
18	108-4733	1	Decal-Auxiliary
19	105-7879	1	Tube-HYD
20	340-4	4	Fitting-HYD, Straight
20:1	237-30	1	O-Ring
20:2	237-79	1	O-Ring
21	322-12	4	Screw-HH
22	98-4747	2	HYD Hose ASM
23	98-4695	2	Spacer
24	33114-035	1	Screw-HH
25	3256-23	4	Washer-Flat
26	3296-29	4	Nut-Lock, NI
28	3290-379	4	Tie-Cable
29	108-9715	2	Sleeve-Thermal
30	2412-129	2	Clamp-Hose
31	340-105	2	Fitting-HYD, 90 DEG
31:1	237-80	1	O-Ring
31:2	237-30	1	O-Ring
32	354-73	2	Fitting-Straight
32:1	237-81	1	O-Ring

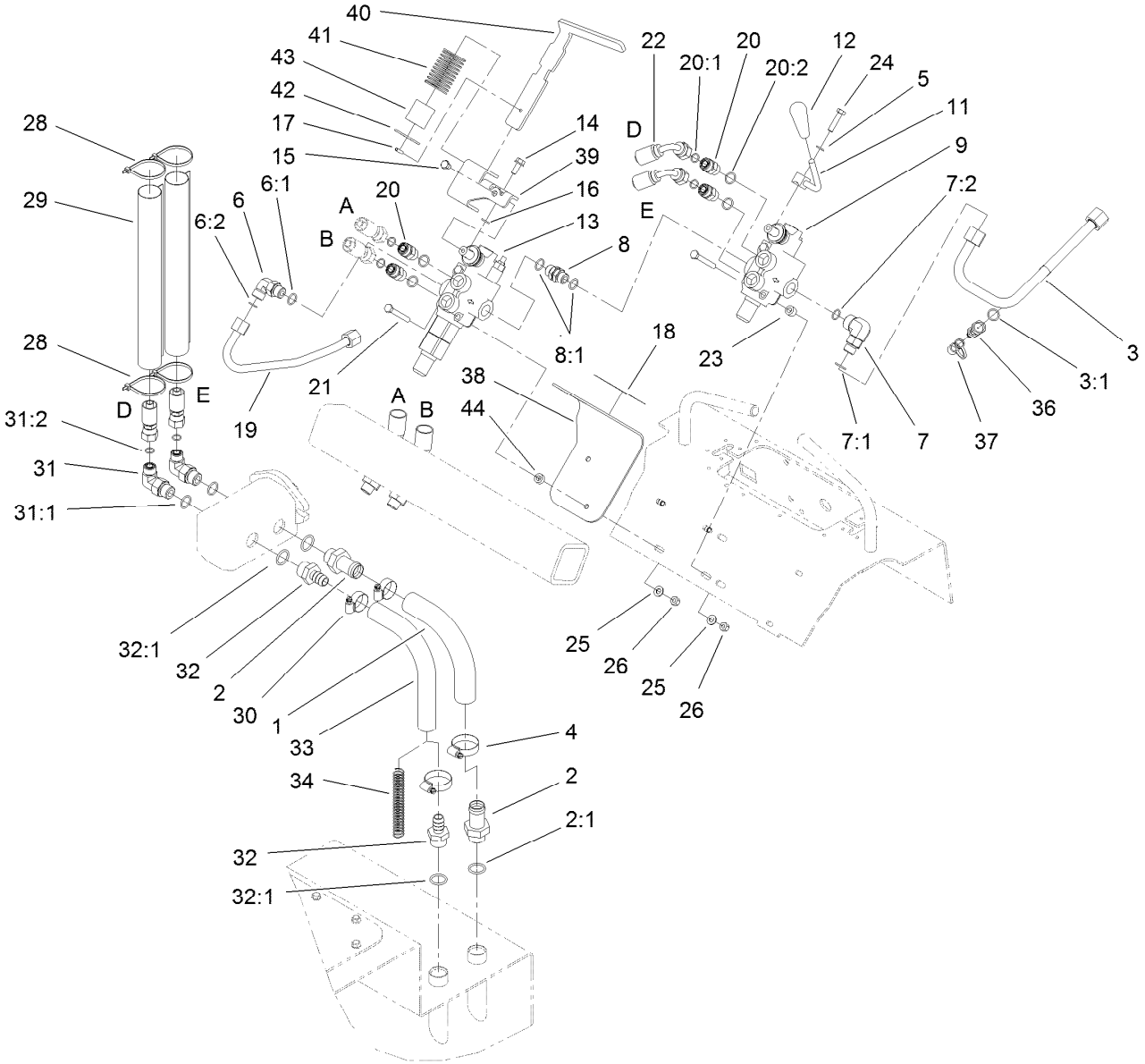

Hydraulic Valve Assembly (continued)

Ref.	Part Number	Qty.	Description
33	98-2713	1	Hose-Suction, HYD
34	99-5349	1	Spring-Compression
36	86-5480	1	Nipple-Test
37	354-79	1	Cap-Dust
38	110-0121-03	1	Bracket-Auxiliary
39	114-1263-03	1	Mount-Lever, Aux

Ref.	Part Number	Qty.	Description
40	110-0123	1	Handle-Lever, Auxiliary
41	110-0124	1	Spring
42	110-0125	1	Retainer-Spring, Auxiliary
43	110-0160	1	Tube-Spring
44	100-2085	2	Spacer

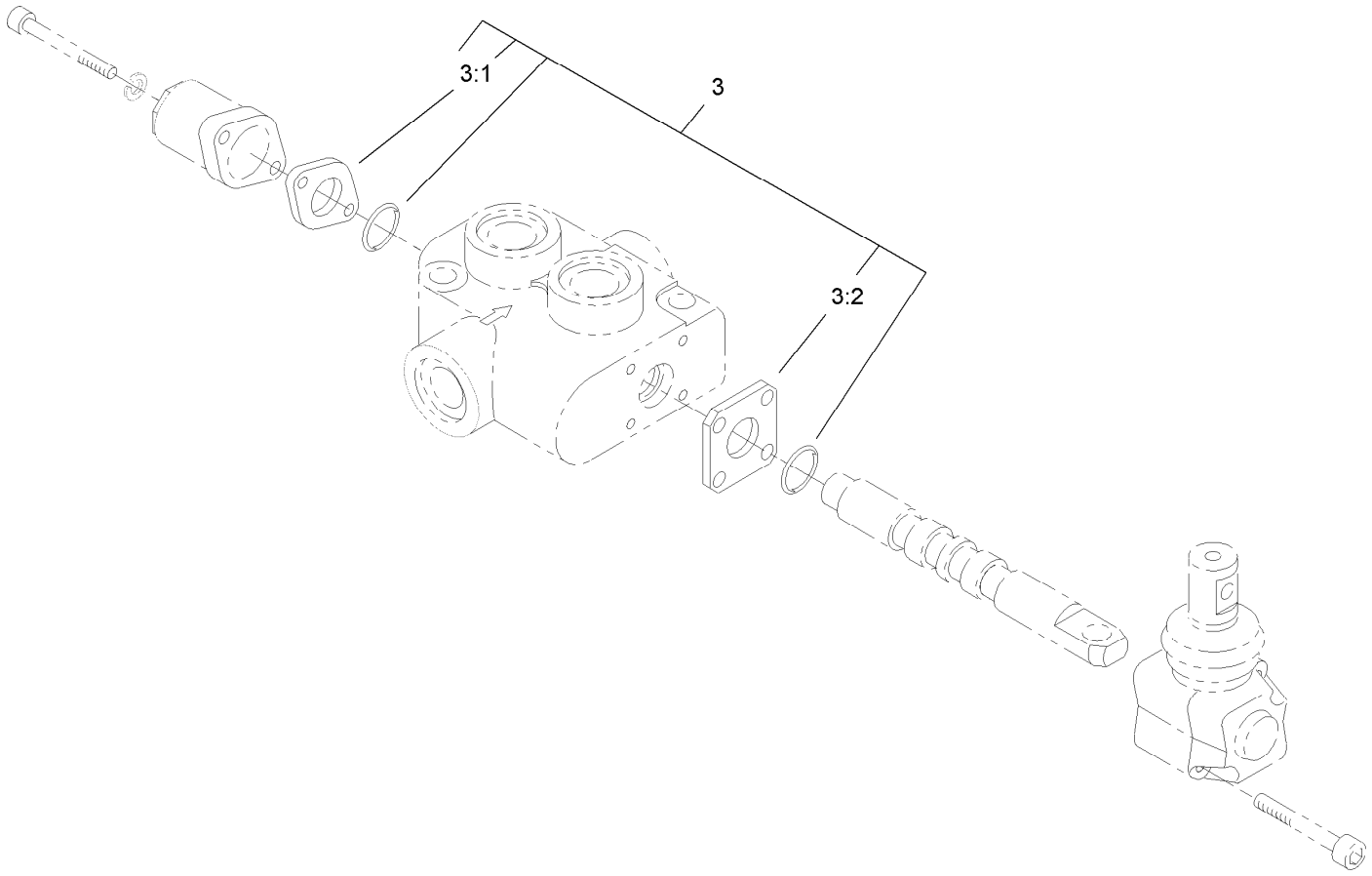

Hydraulic Selector Valve Assembly No. 99-3072

Ref.	*Part Number*	*Qty.*	*Description*
3	99-4390	1	Seal Kit
3:1	99-3074	4	Gasket
3:2	99-3075	8	Gasket

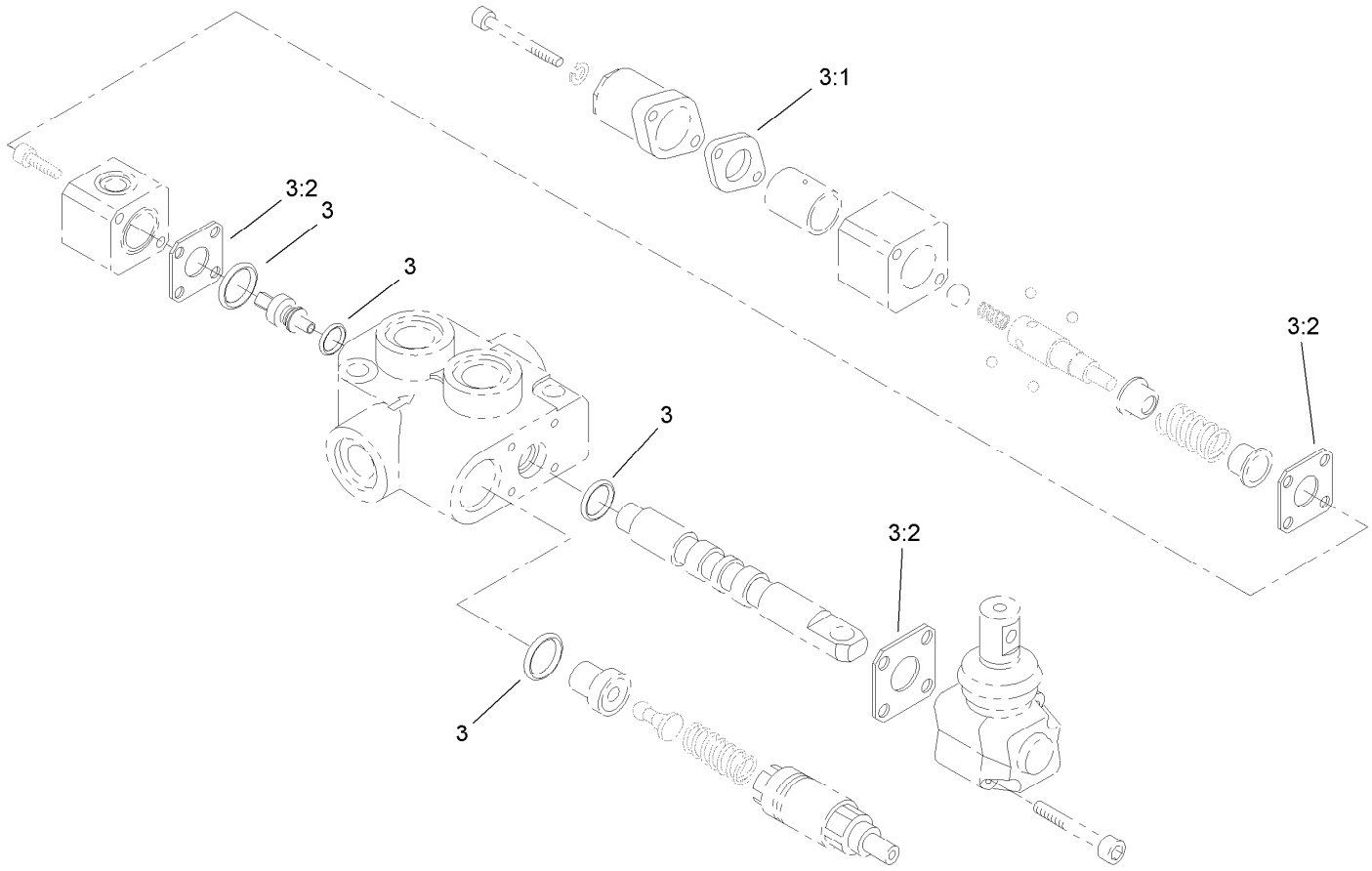

Auxiliary Hydraulic Valve Assembly No. 99-3077

Ref.	*Part Number*	*Qty.*	*Description*
3	99-4390	1	Seal Kit
3:1	99-3074	4	Gasket
3:2	99-3075	8	Gasket

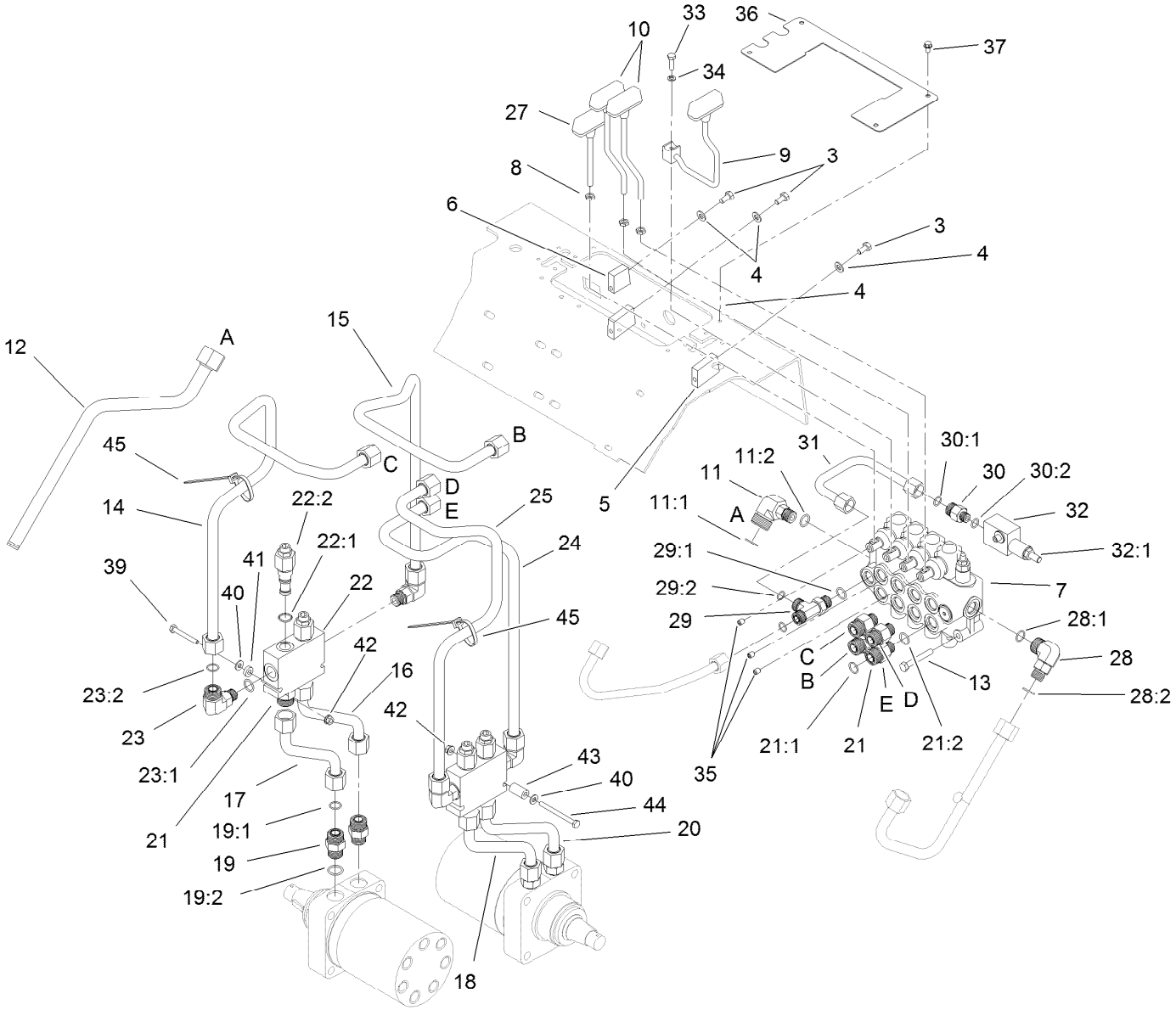

Hydraulic Traction Assembly

Ref.	Part Number	Qty.	Description
3	322-2	3	Screw-HH
4	33094-00	3	Washer-Plain
5	108-4728	2	Spacer
6	105-7870	1	Spacer-Upper
7	105-6246	1	Valve-Four Spool (W/ Relief Port)
8	33014-00	3	Nut-Hex
9	106-8165	1	Lever-Control
10	104-5733	2	Lever-Drive
11	92-5696	1	Fitting-HYD, 90 DEG
11:1	237-58	1	O-Ring
11:2	237-79	1	O-Ring
12	106-8177	1	Tube-Tank, HYD
13	322-11	3	Screw-HH
14	105-7877	1	Tube-HYD (Right B)
15	105-7876	1	Tube-HYD (Right A)
16	98-4740	1	Tube-HYD
17	98-4741	1	Tube-HYD

Ref.	Part Number	Qty.	Description
18	98-4743	1	Tube-HYD
19	340-7	4	Adapter
19:1	237-65	1	O-Ring
19:2	237-80	1	O-Ring
20	98-4742	1	Tube-HYD
21	340-155	8	Fitting-HYD, Straight
21:1	237-79	1	O-Ring
21:2	237-151	1	O-Ring
22	98-9050	2	Valve-Counterbalance
22:1	105-4099	1	Seal Kit
22:2	99-3271	2	Valve-Cartridge
23	340-153	4	Fitting-Elbow, 90 DEG
23:1	237-79	1	O-Ring
23:2	237-151	1	O-Ring
24	105-7875	1	Tube-HYD (Left A)
25	105-7874	1	Tube-HYD (Left B)
27	105-7881	1	Lever-Cylinder
28	340-153	1	Fitting-Elbow, 90 DEG

● Not illustrated

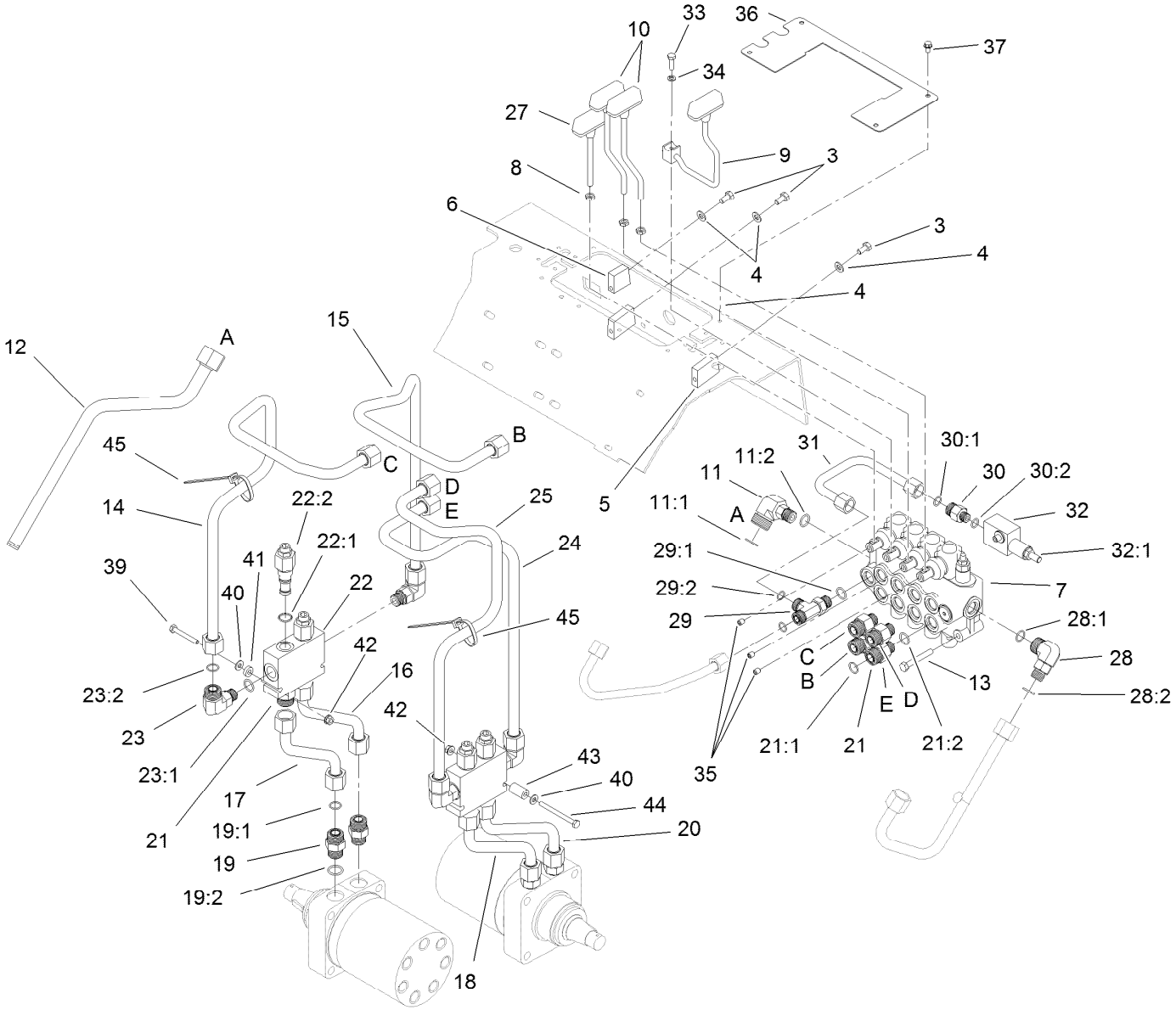

Hydraulic Traction Assembly (continued)

Ref.	Part Number	Qty.	Description
28:1	237-79	1	O-Ring
28:2	237-151	1	O-Ring
29	340-109	1	Fitting-HYD, Tee
29:1	237-79	1	O-Ring
29:2	237-30	2	O-Ring
30	340-5	1	Fitting-Straight
30:1	237-42	1	O-Ring
30:2	237-30	1	O-Ring
31	108-4717	1	HYD Tube ASM
32	105-7882	1	Relief Valve ASM
32:1	105-8358	1	Cartridge-Valve, Relief
32:2	105-8357	1	Seal Kit ●

Ref.	Part Number	Qty.	Description
33	321-5	1	Screw-HH
34	3253-3	1	Washer-Lock
35	105-4068	3	Screw-Set, HSH
36	108-9731-03	1	Plate-Cover
37	32144-4	4	Screw-HWH
39	321-11	1	Screw-HH
40	3256-22	2	Washer-Flat
41	106-8189	1	Spacer
42	32128-32	2	Nut-HHF
43	106-8188	1	Spacer
44	321-23	1	Screw-HH
45	3290-379	2	Tie-Cable

● Not illustrated

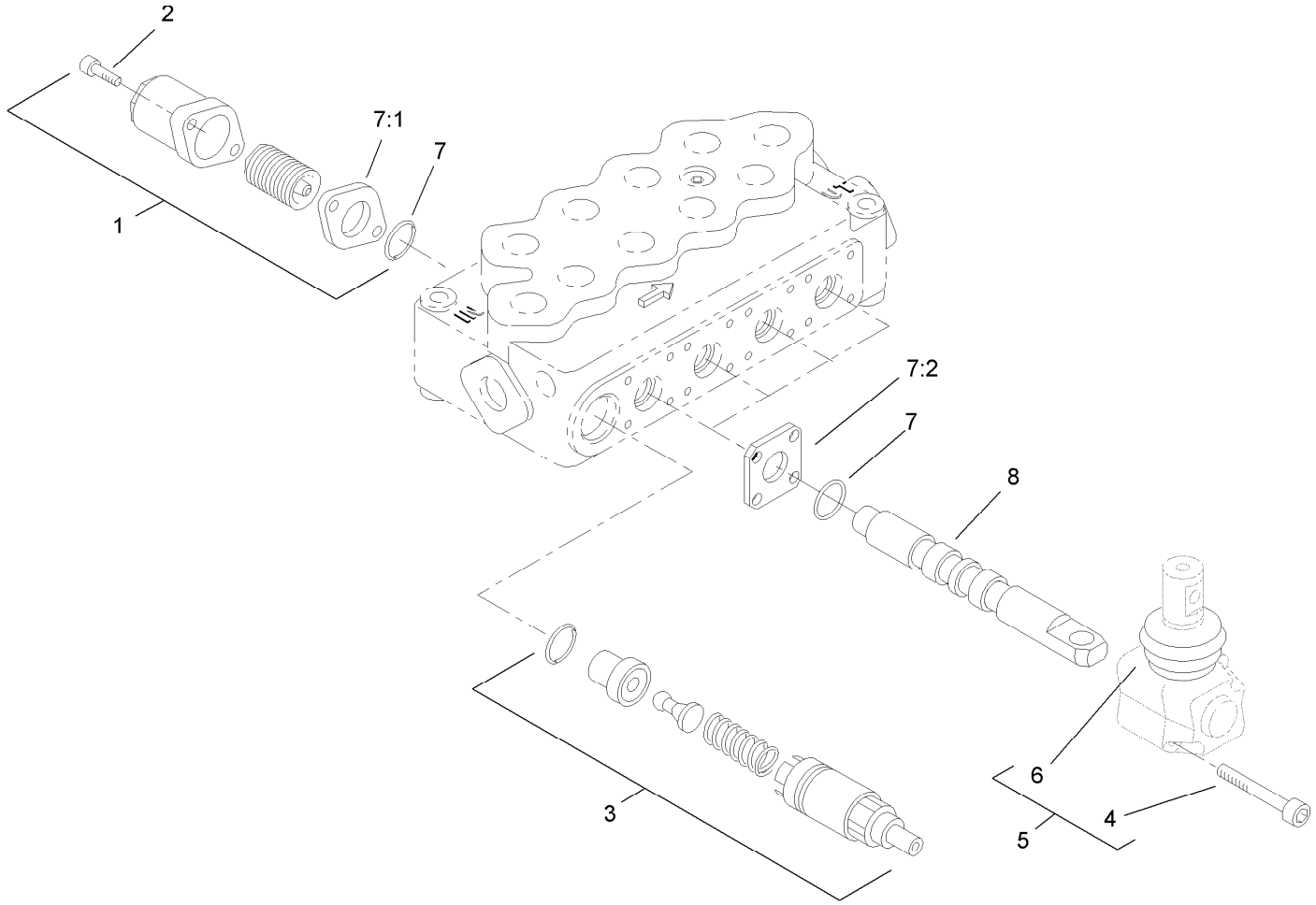

Hydraulic Valve Assembly No. 105-6246

Ref.	*Part Number*	*Qty.*	*Description*
1	100-8801	4	High Force Spring Kit
1	100-8800	4	Standard Spring ASM
2	100-8802	8	Screw-Cap, End
3	100-8805	1	Valve-Relief
4	100-8806	8	Screw
5	100-8807	4	Operator ASM
6	100-8829	4	Boot
7	99-4390	1	Seal Kit
7:1	99-3074	4	Gasket
7:2	99-3075	8	Gasket
8	105-8441	4	Spool-Valve

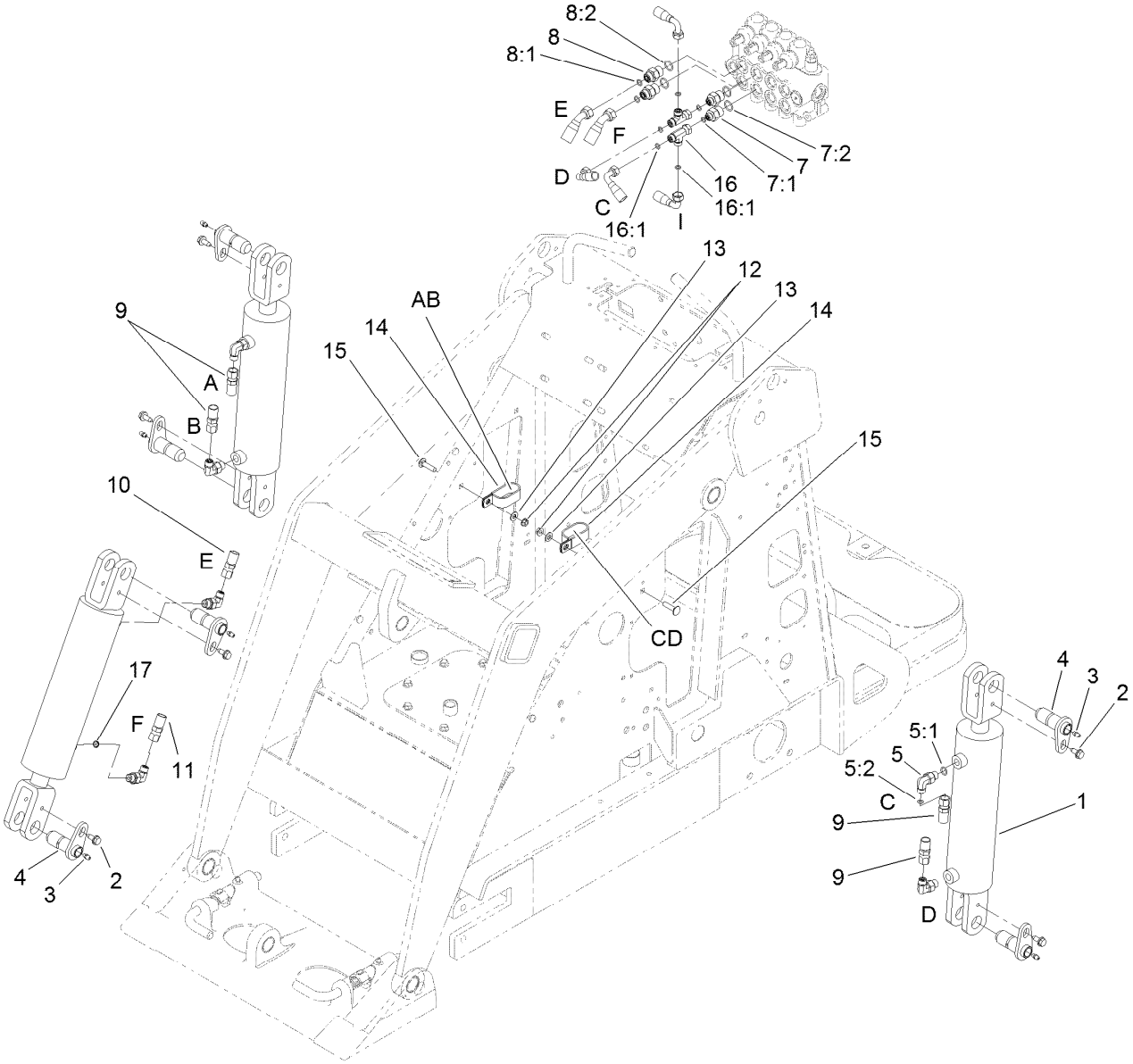

Hydraulic Cylinder Assembly

Ref.	Part Number	Qty.	Description
1	117-1834	3	Cylinder-HYD
2	99-5105	6	Bolt-Shoulder
3	302-5	6	Fitting-Grease
4	112-2609	6	Pin-Pivot
5	340-82	6	Adapter ASM
5:1	237-42	1	O-Ring
5:2	237-21	1	O-Ring
7	340-133	2	Adapter ASM
7:1	237-79	1	O-Ring
7:2	237-21	1	O-Ring
8	340-3	2	Adapter
8:1	237-22	1	O-Ring

Ref.	Part Number	Qty.	Description
8:2	237-79	1	O-Ring
9	98-4725	4	Hose-HYD
10	98-4727	1	Hose-HYD
11	98-4726	1	Hose-HYD
12	3296-29	2	Nut-Lock, NI
13	3256-23	2	Washer-Flat
14	2412-137	2	Clamp-R, Double
15	3230-3	2	Screw-CARR
16	340-151	2	Fitting-HYD
16:1	237-75	2	O-Ring
17	108-4714	1	Orifice-Port Insert, One Way

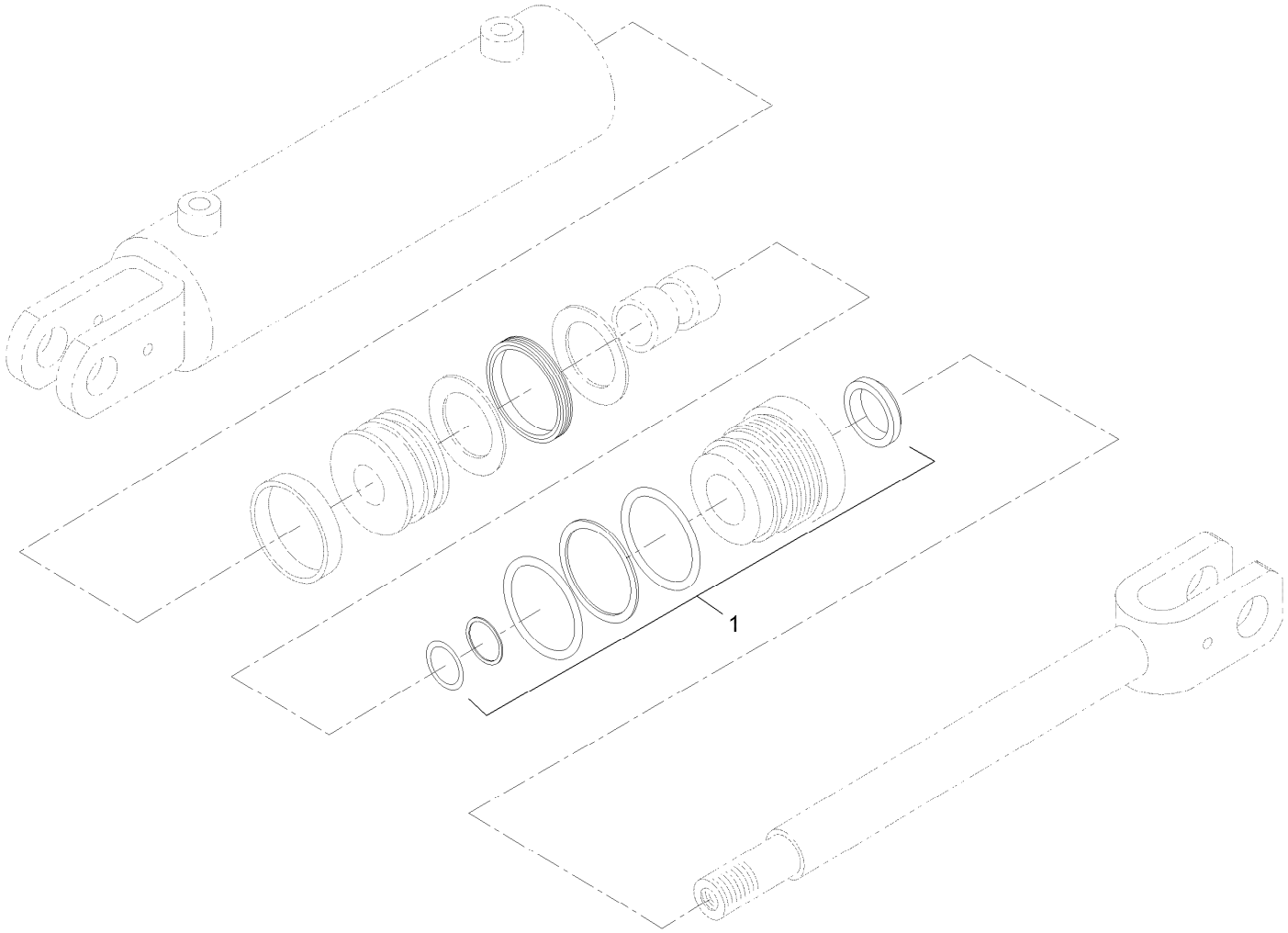

Hydraulic Cylinder Assembly No. 117-1834

Ref.	*Part Number*	*Qty.*	*Description*
1	117-1837	1	Kit-Seal, Hydraulic Cyl

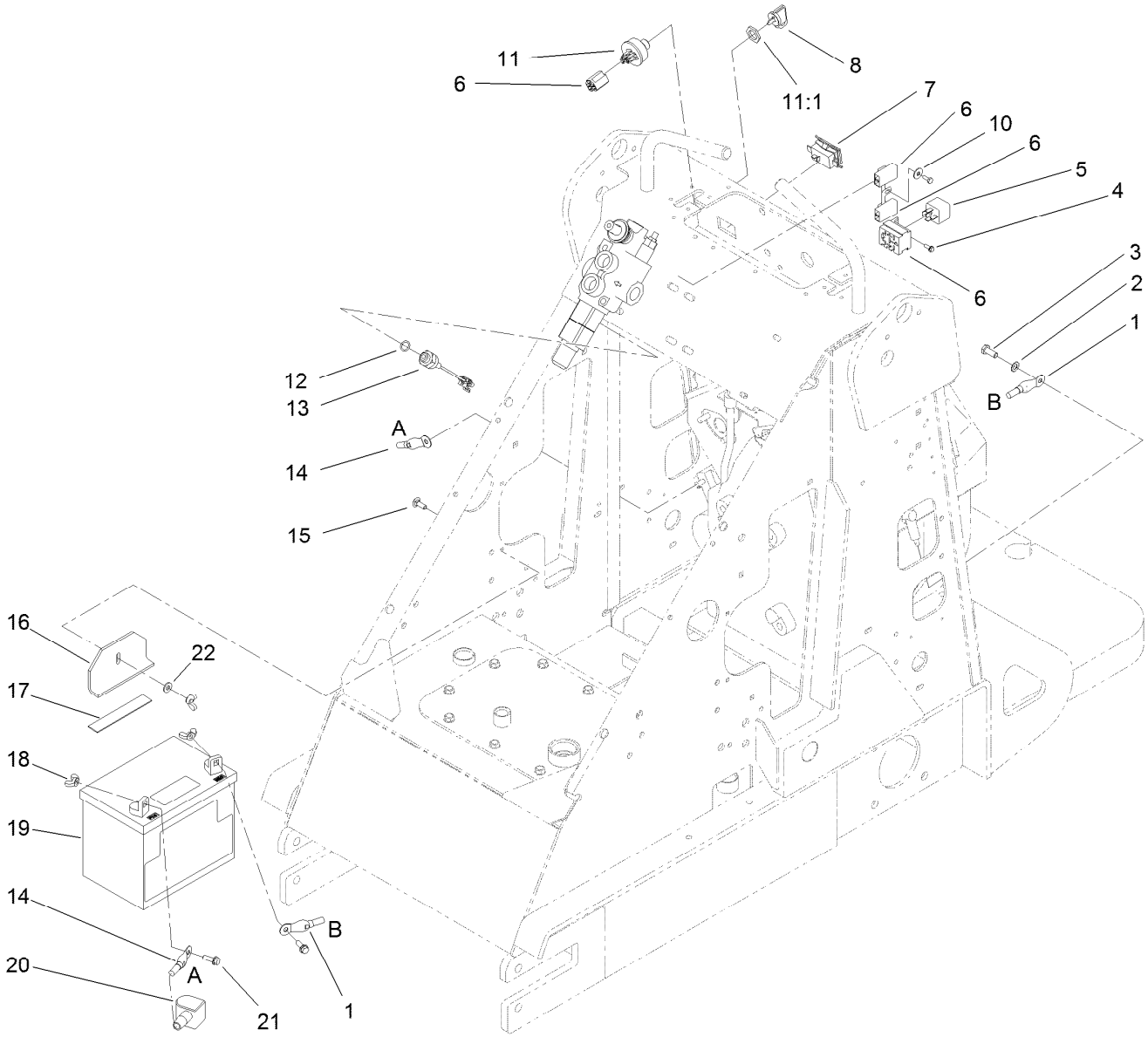

Electrical Assembly

Ref.	Part Number	Qty.	Description
1	111074	1	Cable-Black
2	3255-8	1	Washer-Lock
3	33114-020	1	Screw-HH
4	32144-87	2	Screw-HWHTF
5	98-7249	1	Relay
6	98-4650	1	Harness-Electrical
7	106-8175	1	Meter-Hour
8	63-8360	2	Key-Ignition
10	3256-49	1	Washer-Flat
11	116338	1	Key Switch ASM
11:1	101884	1	Nut
11:2	9201604	1	Washer-Lock ●■

Ref.	Part Number	Qty.	Description
12	237-42	1	O-Ring
13	72-4310	1	Switch-Ball
14	92-6989	1	Wire-21 Inch
15	3229-2	1	Screw-CARR
16	105-8401-03	1	Clamp-Battery
17	94-9566	1	Pad-Footrest
18	32103-22	3	Nut-Wing
19	104-2492	1	Battery-Dry
20	77-0981	1	Boot-Terminal, Red
21	3234-4	2	Screw-HHF
22	3256-22	1	Washer-Flat

● Not illustrated

■ Not used for this configuration

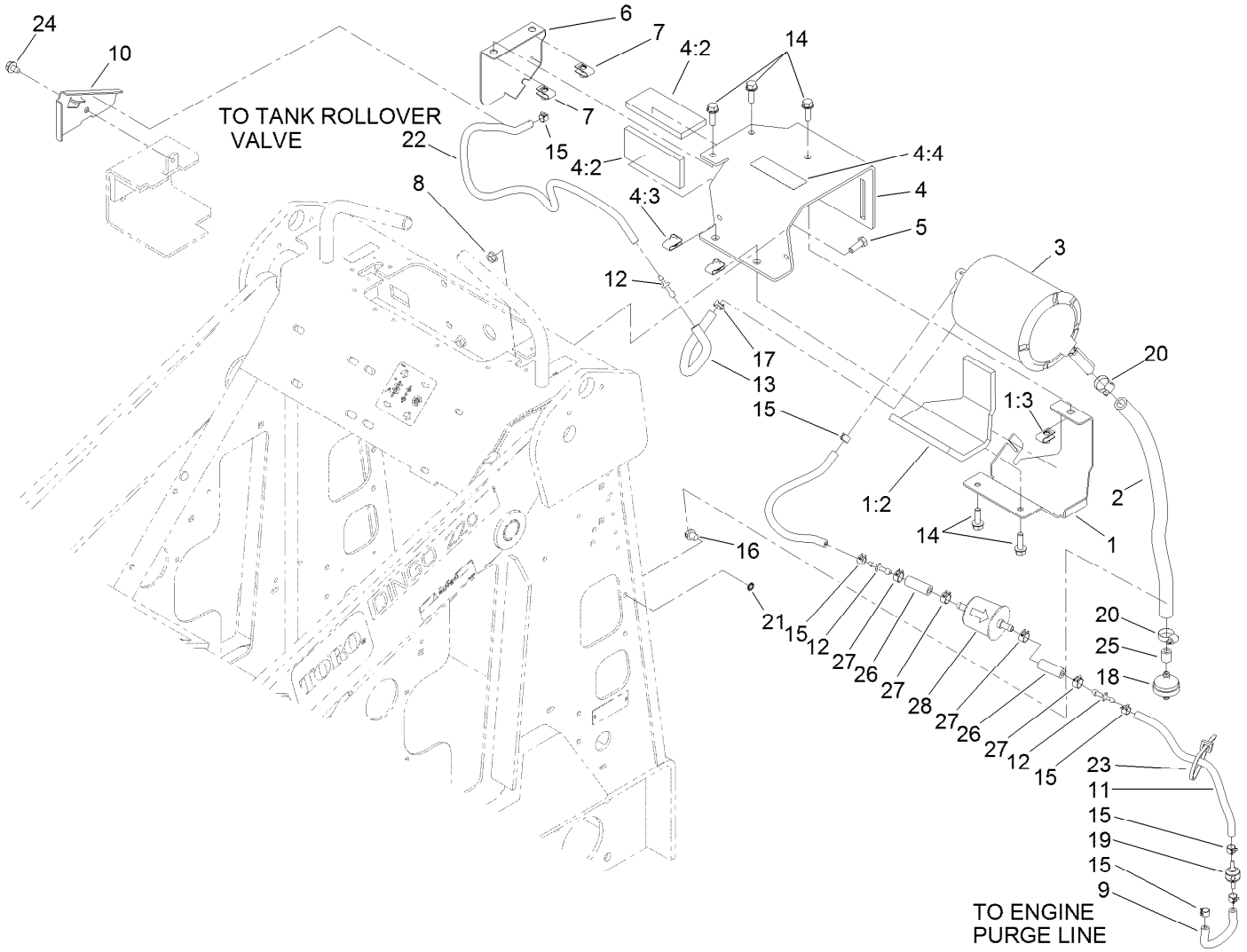

Fuel Tank Vent Assembly

Ref.	Part Number	Qty.	Description
1	117-1821	1	Canister Mount ASM
1:2	117-1799	1	Pad-Foam
1:3	115-7721	1	Nut-Clip, U
2	106-5709	1	Hose-Vent
3	116-1442	1	Canister-Carbon, 1200Cc
4	117-1820	1	Canister Bracket ASM
4:2	117-1798	2	Pad-Foam
4:3	115-7721	2	Nut-Clip, U
4:4	104-6108	1	Decal-Manual
5	322-4	2	Screw-HH
6	117-1785-03	1	Cover-Canister
7	115-7721	2	Nut-Clip, U
8	32128-20	2	Nut-HF
9	115-4736	1	Hose-Fuel
10	117-1792-03	1	Plate-Hose Retainer, RH
11	51-3217	2	Hose-Fuel
12	106-8150	3	Fitting-Straight
13	109-0294	1	Hose-Fuel
14	3234-29	5	Screw-HHF
15	2412-146	7	Clamp-Hose
16	32180-030	1	Clip-Tie
17	2412-98	1	Clamp-Hose
18	115-7854	1	Filter-Fuel, Inline
19	115-7868	1	Valve-Check, Vacuum
20	2412-36	2	Clamp-Hose
21	3254-8	1	Washer-Lock
22	119-6074	1	Hose-Fuel
23	3290-378	1	Tie-Cable
24	9266934	1	Screw
25	117-1789	1	Hose-Fuel
26	106-5317	2	Hose-Fuel
27	92-2379	4	Clamp-Hose
28	120-2235	1	Filter-Fuel

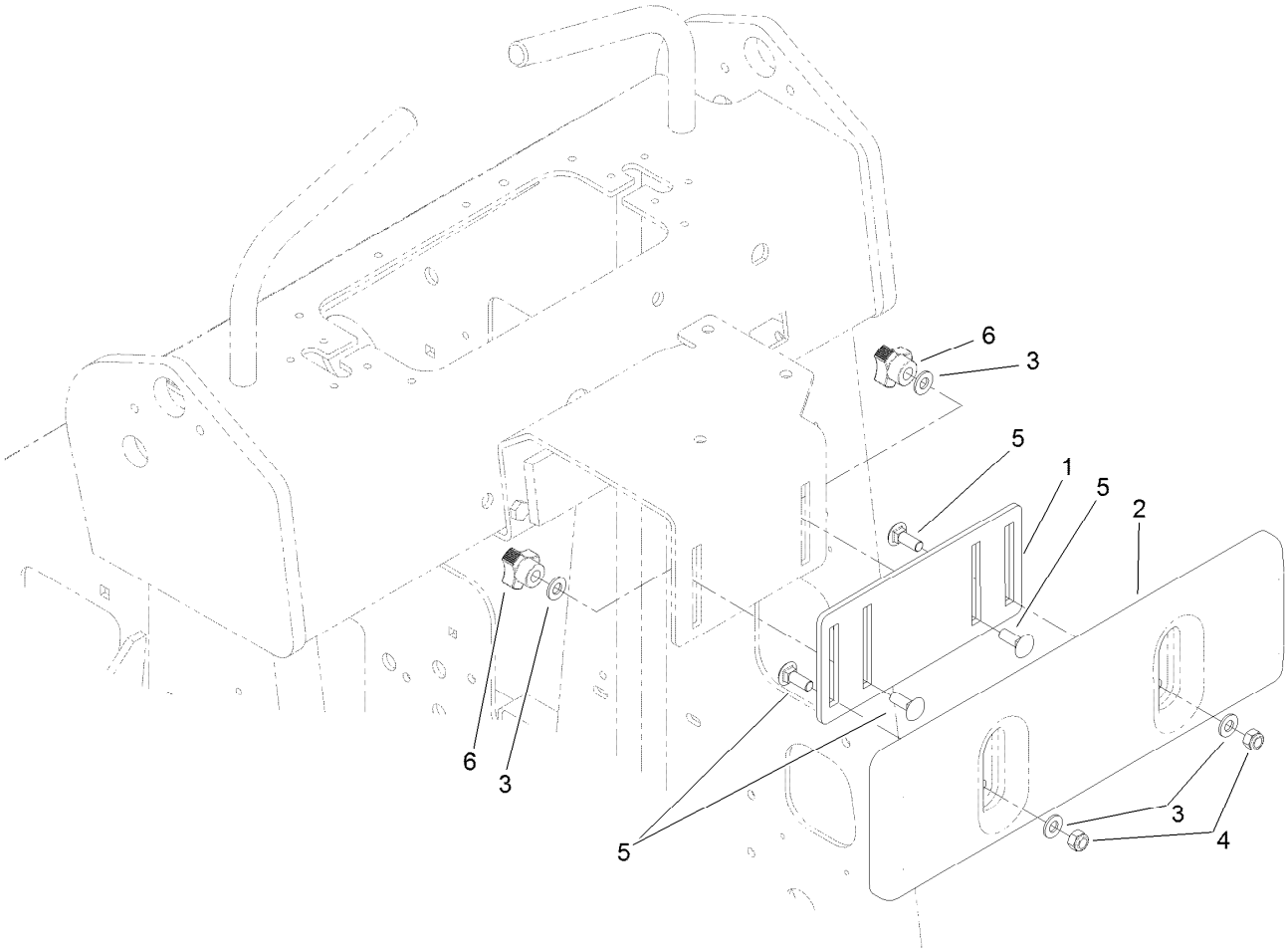

Thigh Support Assembly

Ref.	Part Number	Qty.	Description
1	105-0337-03	1	Plate-Adjusting
2	105-0333	1	Support-Thigh
3	3256-70	4	Washer-Flat
4	3296-72	2	Nut-Lock, NI
5	3230-16	4	Screw-CARR
6	104-6156	2	Knob-Adjustment

Attachments and Accessories

For 22317 Dingo 220 Compact Utility Loader

Product Name	Model/Part
4 Cubic Foot Standard Bucket	22409
Loose Materials Bucket	22410
Narrow Bucket	22520
Auger Head	22802
Universal Swivel Auger Head	22803
Trencher Head	22470
High-Speed Trencher Head	22471
Adjustable Forks	23164
Multi-Purpose Tool	22423
Tree Forks	22438
Leveler	23165
48in Hydraulic Blade	22414
The Eliminator Scarifier/Groomer	22443
Concrete Breaker	23135
Cement Bowl	22442
Backhoe	23163
Rotary Broom	22415
Snowthrower	22456
Stump Grinder	22429
40in Tiller	22445
Soil Cultivator	23101
Seeder Box Kit, Soil Cultivator	23120
Power Box Rake	22425
Vibratory Plow	22911
Bore Drive Head	22420
Rod And Reamer	22421
Counterweight	22417
Rubber Foot Mat	105-5805
Helmet-Face Shield	100-4143
Light Kit	100-8940
Hydraulic Relief Valve Kit	99-4360
Wheel and Tire ASM	98-4709
Tube-Tire (18 X 8.50-8)	106396
RH Wheel And Tire ASM (Powerlug)	99-3140
LH Wheel And Tire ASM (Powerlug)	99-3141
Narrow Tire ASM	104-0572
RH Wheel And Tire ASM	99-1447
LH Wheel And Tire ASM	98-2747
Tube-Tire (18 x 8.50-10)	105-4070
Tire Chain Kit	100-4140
Spark Arrestor	98-9099
Remote Air Cleaner Kit	104-4635
Thigh Support Kit	105-0330

Notes:

Notes:

Notes:

TORO®

Count on it.