FORM NO. 3313-496

TORO®

MODEL NO. 30567

INSTALLATION INSTRUCTIONS

TRACTOR SHIELD KIT

GROUNDSMASTER 220 D

INSTALL SHIELD ASSEMBLY

1. From front of machine, slide shield assembly under tractor, hooking shield assembly onto axle assembly. Shield assembly should be centered on axle assembly.

2. Pivot rear of shield assembly upward, centering each rear slot with center of each side frame channel bottom flange.

3. Using shield assembly as a template, locate, mark and drill a .531" dia. hole in each side frame channel.

4. Thread a jam nut onto each mounting pin.

5. Using holes previously drilled, secure a mounting pin to each frame channel with a hex nut as shown in fig.1. Adjust jam nuts so shield fits snugly against frame channels.

6. Pivot rear of shield assembly upward onto mounting pins. Secure each side with a hair pin cotter.

INSTALL FOAM SEAL

1. Raise seat, peel backing off foam seal and secure seal to rear of seat frame. Make sure notches in seal and frame are aligned.

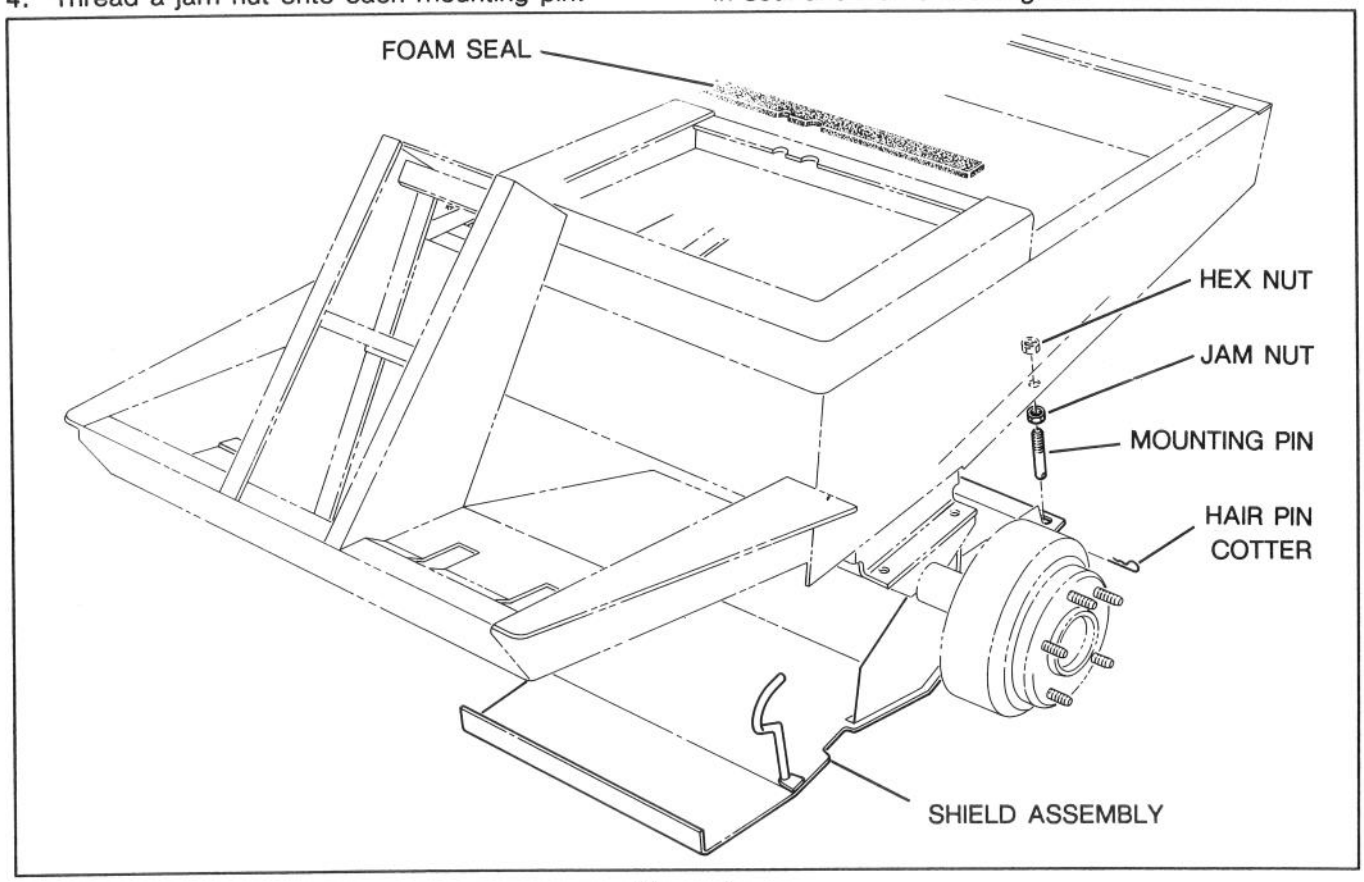

Figure 1

©The TORO Company - 1988