FORM NO. 3313-540 Rev. A

TORO

MODEL NO. 26624 - 8000001 & UP

OPERATOR'S MANUAL

21" (0.53 m) SP 4-in-1 REAR BAGGER

KEY-LECTRIC® START

⚠ SAFETY INSTRUCTIONS

This mower "meets or exceeds CPSC blade safety requirements for walk behind rotary mowers," and the B71.1-1986 specifications of the American National Standards Institute. However, improper use or maintenance by the operator or owner can result in injury. To reduce the potential for injury, comply with these safety instructions and always pay attention to the safety alert symbol. Failure to comply with the instruction may result in personal injury.

BEFORE OPERATING

1. Read this manual carefully before operating the mower. Become familiar with the controls and proper use of the mower. Never allow children to operate the mower or adults to operate it without proper instructions.

2. Keep everyone, especially children and pets, away from the area of operation. Thoroughly inspect area where mower will be used and remove sticks, stones, wire and debris.

3. Wear long pants and substantial shoes. Do not operate mower while wearing open sandals or when barefoot.

4. Check fuel level before starting engine. Do not fill fuel tank indoors, when the engine is running, or until engine cools for several minutes after running. Wipe up spilled gasoline before starting engine.

5. Keep all guards, shields and safety devices in place. Repair or replace defective or damaged parts.

6. Traction drive and blade are designed to stop when control bar is released. Assure control and brake function properly before each use of mower.

WHILE OPERATING

7. Do not run engine indoors.

8. Always maintain secure footing. Keep a firm grip on the handle and walk; never run. Never operate mower in wet grass. Mow only in daylight or in good artificial light.

9. Mow across the face of slopes; never up and down. Use extreme caution when changing direction on slopes. Do not mow excessively steep slopes.

10. Always wear safety glasses or eye shields during operation to protect eyes from foreign objects that may be thrown from the machine. Keep face, hands and feet away from the mower housing and cutter blade when the engine is running. Stay behind the handle until the engine stops and keep clear of discharge opening at all times.

11. When mulching, assure discharge door is closed. When bagging grass, stop engine before the bag is removed and emptied.

12. Shut engine off and wait for all moving parts to stop before unclogging chute.

13. Since the blade rotates for a few seconds after the blade control is released, stay behind the handle until all moving parts stop.

14. After striking a foreign object or if mower vibrates abnormally, stop engine and remove wire from spark plug. Check mower for damage and make all repairs before using mower again.

15. Stop the engine before adjusting the height-of-cut.

16. Stop the blade when crossing a gravel driveway, road or sidewalk.

17. Stop engine before leaving the operator's position — behind the handle. Disconnect wire from spark plug if mower will be unattended.

18. Do not touch engine while it is running or shortly after it is stopped because engine will be hot enough to cause a burn.

MAINTENANCE

19. Perform only those maintenance instructions described in this manual. If major repairs

©The Toro Company — 1988

⚠ SAFETY INSTRUCTIONS

are ever needed or if assistance is desired, contact an Authorized TORO Service Dealer.

20. Before mower is cleaned, inspected, serviced or adjusted, stop engine and disconnect wire from spark plug. Keep wire away from plug to prevent accidental starting.

21. To assure the mower is in safe operating condition, frequently check and keep all nuts, bolts and screws tight. Assure blade nuts are tightened to 25-33 ft-lb.

22. To reduce fire hazard, keep engine free of grease, grass, leaves and accumulations of dirt.

23. Check grass catcher bag frequently for wear or deterioration. Replace with a new bag for your protection.

24. Allow engine to cool before storing mower in any enclosure. Do not store mower near any open flame or where gasoline fumes may be ignited by a spark.

25. Do not overspeed the engine by changing governor settings.

26. At the time of manufacture the mower conformed to the safety standards in effect for rotary mowers. To assure optimum performance and continued safety certification of the mower, use genuine TORO replacement parts and accessories. Replacement parts and accessories made by other manufacturers may result in non-conformance with the safety standards, and that could be dangerous.

SAFETY DECALS

Safety decals and instructions are easily visible to the operator and are located near any area of potential danger. Replace any decal that is damaged.



ON DISCHARGE DOOR
(Part No. 63-9050)

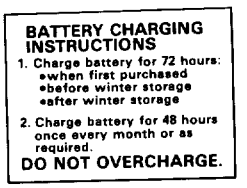

ON BATTERY
(Part No. 55-8190)



ON MOWER HOUSING
(Part No. 43-8480)

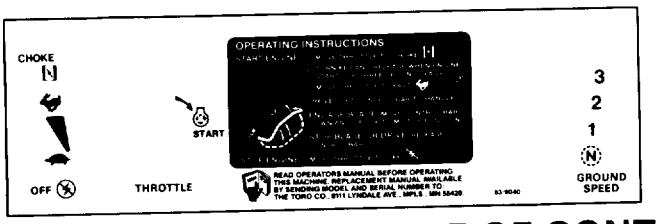

ON CONTROL PANEL
(Part No. 63-9040)

TABLE OF CONTENTS

	Page
Set-up Instructions	3
Before Operating	4
Operating Instructions	5-7
Maintenance	8-12
Servicing Air Cleaner	8
Replacing Spark Plug	8
Draining Gasoline	8
Adjusting Throttle	8
Changing Crankcase Oil	9
Adjusting Wheel Drive	9
Inspecting/Removing/Sharpening Blade	10
Lubrication	11
Adjusting Blade Brake	11
Check Control Bar Operation	12
Adjusting Ground Speed Control For Neutral	12
Charging Battery	12
Cleaning Mower Housing	13
Preparing Mower for Storage	13
Optional Spark Arrestor	13
Product Identification	13
Toro Service Support	14
Maintenance Record	14
Troubleshooting Chart	15
The Toro Promise	16

SET-UP INSTRUCTIONS

INSTALL HANDLE, BAG AND BATTERY

1. Spread handle ends and slide onto mower housing mounting studs (Fig. 1).

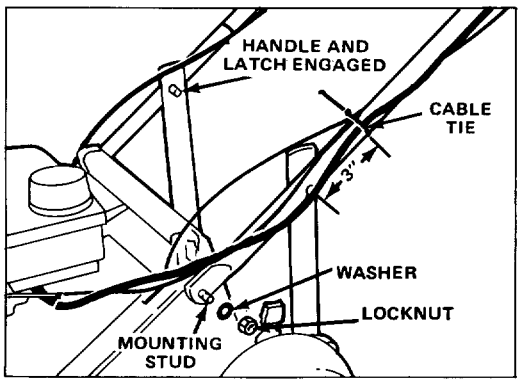

Figure 1

2. Secure each side of handle to mounting studs with a washer and locknut (Fig. 1).

3. Spring handle latches inward, move handle up or down to snap handle studs into middle hole on both latches (Fig. 1).

4. Handle height may be adjusted to desired position by moving handle studs to one of the other holes in handle latches.

5. Secure control cables to each side of handle approximately 3" above handle stud (Fig. 1).

6. To install grass bag, raise discharge door and hook bag frame onto hinge pins (Fig. 2). Allow bag to rest on mower housing over discharge opening. Close door and make sure it seals around top of bag opening (Fig. 3).

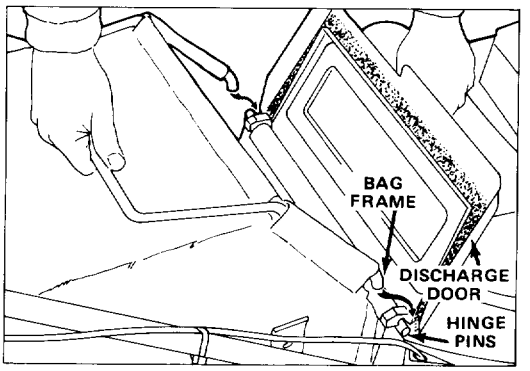

Figure 2

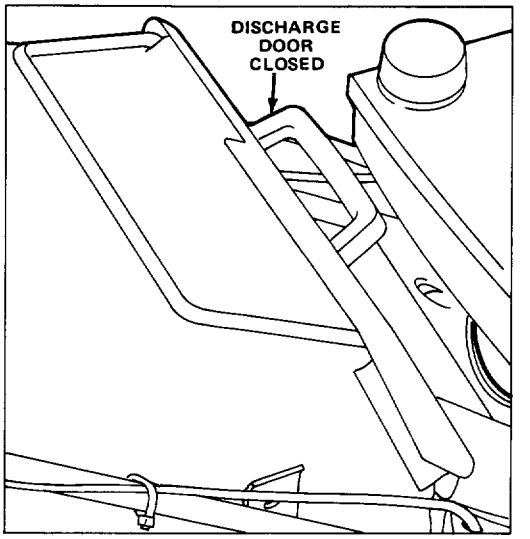

Figure 3

7. Charge battery: refer to Charging Battery, page 12. Slide battery, decal side up, between mounting tabs on back of control panel and connect wires (Fig. 4). Insert key into switch when ready to start engine.

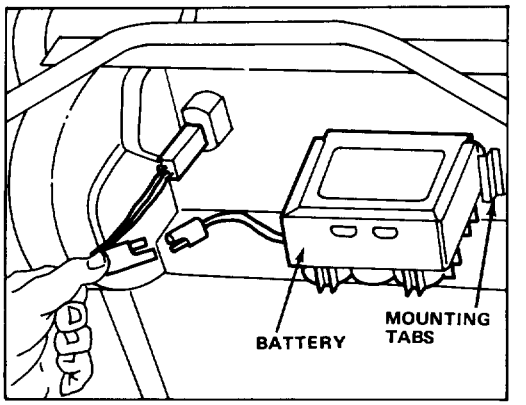

Figure 4

BEFORE OPERATING

FILL CRANKCASE WITH OIL

Initially, crankcase must be filled with 18 ounces (0.532 l) of SAE 10W30 oil. Use any high quality detergent oil having the American Petroleum Institute – API – "service classification" MS, SC, SD, SE or SF.

Before each use, assure oil level is between ADD and FULL mark. Add oil if level is low.

1. Position mower on level surface and clean around oil dipstick.
2. Remove dipstick by rotating cap counterclockwise 1/4 turn.
3. Wipe dipstick and insert it into filler neck. Rotate cap clockwise 1/4 turn. Then remove dipstick and check level of oil (Fig. 5). If level is low, add only enough oil to raise level to FULL mark on dipstick. DO NOT FILL ABOVE FULL MARK BECAUSE ENGINE COULD BE DAMAGED WHEN STARTED.
4. Insert dipstick into filler neck and rotate cap clockwise 1/4 turn to lock.

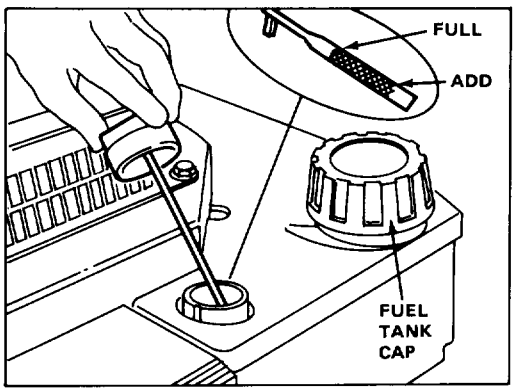

Figure 5

Note: Check oil level each time mower is used or after every 5 operating hours. Initially, change oil after the first 2 hours of operation; thereafter, change oil after every 25 hours of operation. More frequent oil changes are required in dusty or dirty conditions.

FILL FUEL TANK WITH GASOLINE

Note: The Toro Company strongly recommends the use of fresh, clean, **UNLEADED** regular grade gasoline in Toro gasoline powered products. Unleaded gasoline burns cleaner, extends engine life, and promotes good starting by reducing the build-up of combustion chamber deposits. Leaded gasoline can be used if unleaded is not available.

1. Clean around fuel tank cap and remove cap from tank (Fig. 5). Using unleaded gasoline, fill fuel tank to within 1/2 inch (13 mm) from top of tank.
2. Install fuel tank cap and wipe up any spilled gasoline.

IMPORTANT: Do not mix oil with the gasoline. Never use methanol, gasoline containing methanol, gasohol containing more than 10% ethanol, gasoline additives, premium gasoline, or white gas because engine fuel system damage could result.

DANGER

Gasoline is extremely flammable and explosive under certain conditions. Do not smoke when handling fuel and keep fuel far away from open flames and sparks. Never buy more than a 30 day supply of gasoline. Store gasoline in an approved container and keep it out of the reach of children.

Refuel outdoors, only when engine is cold. Fill tank to within 1/2" (13 mm) from its top. This space is for expansion of fuel. Use funnel or spout to prevent spilling. Wipe up any spilled gas.

OPERATING INSTRUCTIONS

4-in-1 MOWING VERSATILITY

REAR BAG – Bag lush grass in the spring to help keep your lawn free of thatch forming clippings.

MULCH – In summer, when grass grows slower and is drier, mulch by removing the grass bag and closing the discharge door (Fig. 6).

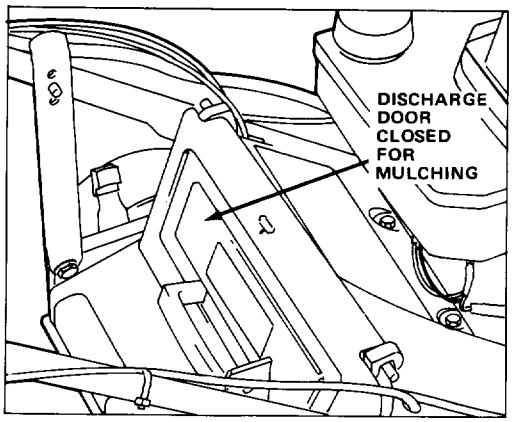

Figure 6

SIDE DISCHARGE – Disperse clippings with optional, rear-mounted side discharge chute which installs in seconds. Between the handle design lets you trim on both sides (Fig. 7).

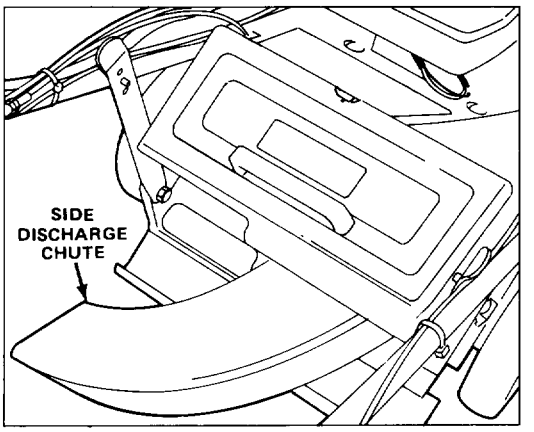

Figure 7

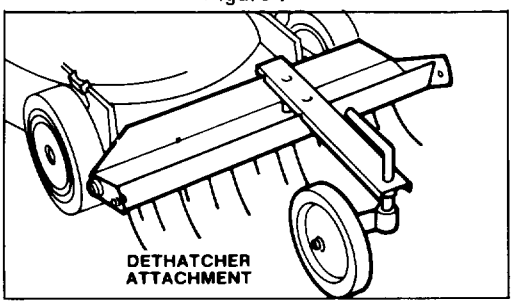

Figure 8

REMOVE THATCH – As spring tines on optional Toro Dethatcher scratch and vibrate through the grass, thatch is loosened and conveniently vacuumed into the bag (Fig. 8).

OPERATING TIPS

1. CHECK OIL LEVEL - Maintain oil level between ADD and FULL range as shown on dipstick.

2. BEFORE EACH MOWING – Assure blade brake, self-propelled drive and control bar function properly. When control bar is released, blade and self-propelled drive are designed to stop.

3. CUTTING AND BAGGING – Best results are achieved when engine is running at maximum speed and only about 1/3 of the grass blade is cut. If long grass must be cut, use highest height-of-cut setting for first mowing. Then recut the grass at a more normal setting. If too long of grass is cut, mower may plug and cause engine to stall.

When cutting in dry, dusty conditions move the throttle to a slower speed to reduce the amount of dust generated by mower.

4. SHARP BLADE – Begin each cutting season with a sharp blade. Periodically file down nicks.

STARTING, STOPPING AND SELF-PROPELLING

1. CONTROLS – Key switch, throttle, ground speed control and blade/self-propelled control bar are on upper handle (Fig. 9). Recoil starter is on top of engine.

2. Push spark plug wire onto spark plug and move ground speed control to "N" (Fig. 9).

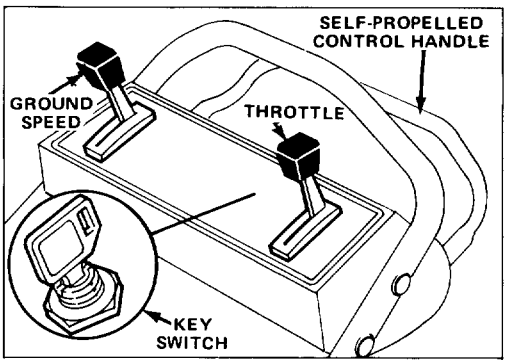

Figure 9

3. KEY-LECTRIC STARTING – Move throttle (Fig. 9) to CHOKE. Turn key (Fig. 9) to START and release when engine begins running. Regulate throttle as desired. If battery is discharged, engine can be started with the recoil starter (Fig. 10).

OPERATING INSTRUCTIONS

4. MANUAL STARTING – Move throttle to CHOKE. Pull engine mounted recoil starter out until positive engagement results; then pull vigorously to start the engine (Fig. 10). Regulate throttle as desired when engine starts.

NOTE: For engine and blade clutch break-in, manually start the engine for the first hour of operation when new, AFTER break-in the KEY-LECTRIC starting may be used.

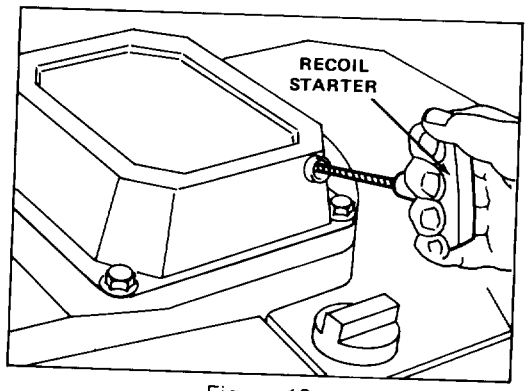

Figure 10

5. BLADE AND TRACTION OPERATION (Fig. 11) – Move control bar down to "A" and raise to engage blade "B". Move ground speed control to desired setting and squeeze control bar against handle "C" to drive. Ground speed varies, depending on space between control bar and handle. To disengage traction drive, but keep blade engaged, gradually release control bar to mid position. To self-propel with blade disengaged, simply squeeze control bar against handle, eliminating downward movement necessary for blade engagement.

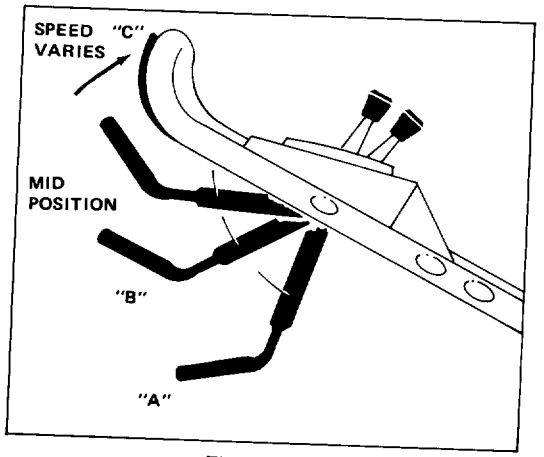

Figure 11

NOTE: The drive wheels are equipped with freewheeling clutches which enable the mower to be pulled rearward easier when the wheel drive is disengaged. To disengage the clutches, mower must be pushed forward at least 1" after wheel drive operation has stopped.

7. STOPPING (Fig. 9) – Release control bar to stop blade and traction drive. Move ground speed control to "N". To stop engine, move throttle to OFF. Remove key from switch or pull wire off spark plug if mower is unattended or not used.

USING GRASS BAG

1. Stop engine and wait for all parts to stop.

2. INSTALLING BAG – Raise discharge door and hook bag frame onto hinge pins (Fig. 12). Allow bag to rest on mower housing over discharge opening. Close door and make sure it seals around top of bag opening.

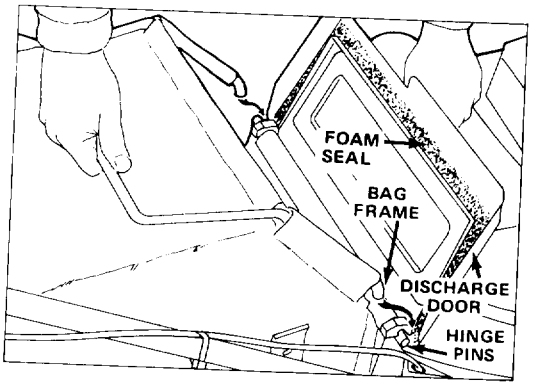

Figure 12

3. CHECKING BAG – To see if grass bag is full, release control bar and wait for blade to stop. Open discharge door to see how full bag is.

4. REMOVING BAG – Release control bar and wait for blade to stop. Open discharge door. While holding discharge door, grasp handle on

⚠ WARNING

Never open chute door on mower when engine is running because grass clippings and other debris discharges with enough force to cause injury.

The grass bag material will catch and contain the majority of foreign objects, such as small stones and other similar debris. The bag material, however, is subject to normal wear and deterioration. So check the bag frequently, and if it is defective, install a new genuine TORO replacement bag that has this or similar warning.

grass bag and lift bag off mower. Allow discharge door to close. For protection, always keep hands and feet away from mower housing because engine is running.

5. EMPTYING BAG – Grasp bag frame handle and rear of bag. Gradually raise rear of bag while shaking bag to empty.

NOTE: If grass bag is over filled, some clippings may remain in discharge opening when bag is removed. Normally, these clippings will be blown into grass bag when the bag is reinstalled and the blade is engaged. If the discharge opening remains plugged, be sure to stop engine and wait for all moving parts to stop, before attempting to clear any clippings from the mower.

ADJUSTING HEIGHT-OF-CUT

Three numbers cast into the housing represent the height-of-cut setting. The diamond between each number represent ½" increments.

1. Stop the engine.

2. For easier adjustment, lift housing up so wheel is off ground. Squeeze adjusting lever toward wheel and move to desired setting (Fig. 13). Assure pin on adjusting lever engages notch in housing. Adjust all wheels to the same setting.

Note: Front wheels can be adjusted to ½ inch.

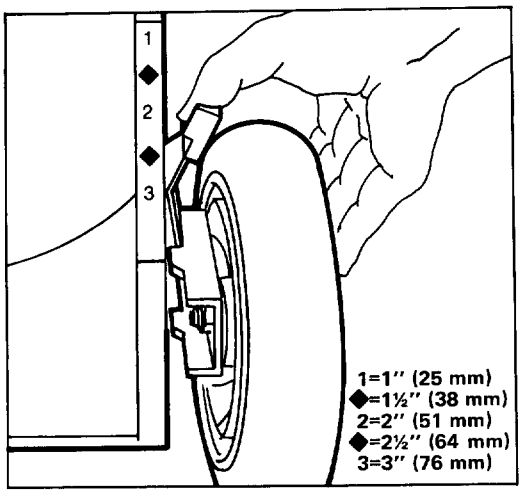

Figure 13

Move adjusting lever past "1" and release pin into notch in housing.

3. In conditions when maximum power is required or when cutting in spongy thatch causing rear wheels to sink in turf, raise rear wheel setting one increment higher. Make sure wheel settings are returned to equal settings, when cutting in normal conditions, to assure the best quality of cut is achieved.

MAINTENANCE

CAUTION

Pull wire off spark plug before performing adjustments or maintenance.

SERVICING AIR CLEANER

Normally, clean air cleaner after every 25 operating hours. More frequent cleaning is required when mower is operated in dusty or dirty conditions.

1. Stop engine and remove key from switch or pull wire off spark plug.
2. Push in locking tabs and lift off air cleaner cover. Clean cover thoroughly (Fig. 14).
3. If top of foam element is dirty, remove it from air cleaner body (Fig. 14). Clean thoroughly.

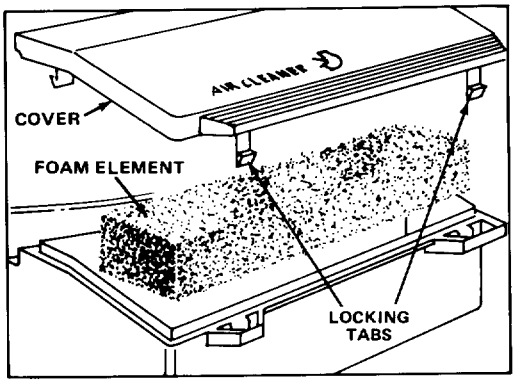

Figure 14

A. WASH foam element in a solution of liquid soap and warm water. Squeeze to remove dirt, but do not twist because foam may tear.
B. DRY by wrapping in a clean rag. Squeeze rag and foam element to dry.
C. SATURATE element with 5 teaspoons (25 ml) of SAE 10W30 engine oil. Squeeze element to remove excess oil and to distribute oil thoroughly. A damp element is desirable.

4. Reinstall foam element and air cleaner cover.

IMPORTANT: Do not operate engine without air cleaner element because extreme engine wear and damage will likely result.

REPLACING SPARK PLUG

Use an NGK BPR6ES spark plug or equivalent. Correct air gap is 0.032" (0.813 mm). Remove plug after every 25 operating hours and check its condition.

1. Stop engine and pull wire off spark plug.
2. Clean around spark plug and remove plug from cylinder head.

IMPORTANT: Replace a cracked, fouled or dirty spark plug. Do not sand blast, scrape or clean electrodes because engine damage could result from grit entering cylinder.

3. Set air gap at 0.032" (0.813 mm) (Fig. 15). Install correctly gapped spark plug and gasket seal. Tighten plug firmly to 15 ft-lb (20.4 N·m).

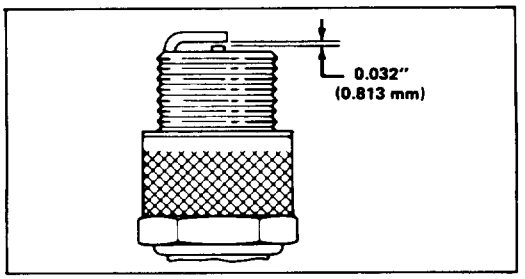

Figure 15

DRAINING GASOLINE

1. Stop engine. Remove key from switch or pull wire off spark plug.
2. Remove cap from fuel tank and use pump-type syphon to drain fuel into clean gas can.

Note: This is the only procedure recommended for draining fuel.

ADJUSTING THROTTLE

Throttle control adjustment may be required if engine does not start or stop. Whenever a new throttle control cable is installed, throttle must be adjusted.

1. Stop engine. Remove key from switch. Pull wire off spark plug.
2. Move throttle control to FAST.
3. Loosen cable clamp screw until throttle cable slides (Fig. 16). Align holes in throttle lever and throttle bracket. Tighten cable clamp screw to lock adjustment in place.

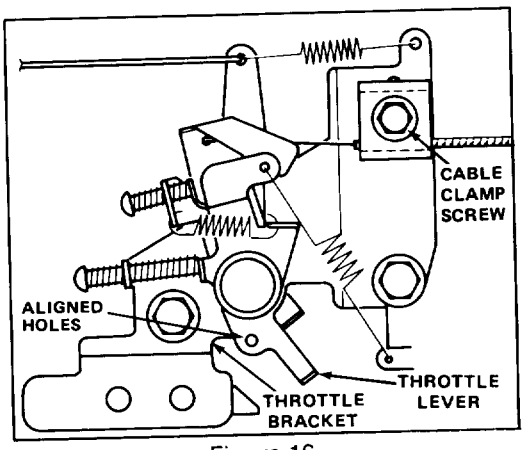

Figure 16

CHANGING CRANKCASE OIL

Change oil after the first 2 operating hours and after every 25 hours thereafter. Since warm oil drains better and carries more contaminants than cold oil, run engine for a minute or so before draining oil.

1. Stop engine. Remove key from switch. Pull wire off spark plug.
2. Remove grass bag. Drain gasoline from fuel tank: refer to Draining Gasoline, page 8.
3. Raise left side of mower at least 12 inches. Remove drain plug, using a 14mm or 9/16" wrench. Place a drain pan at left side of mower.
4. Insert oil drain tube over drain opening. Lower mower allowing oil to drain into pan. Raise right side of mower until all oil has flowed into drain pan.
5. After draining, install drain plug and fill engine with fresh oil: refer to Fill Crankcase With Oil, page 4.

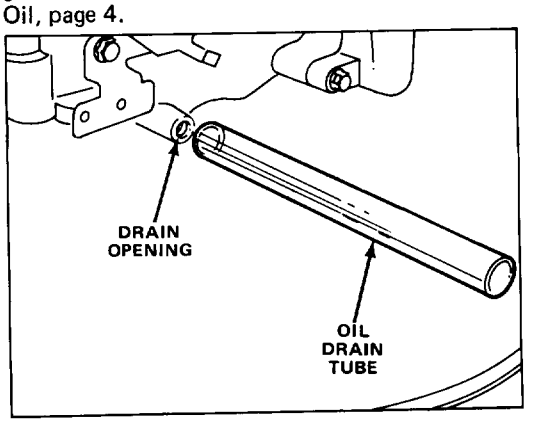

Figure 17

ADJUSTING WHEEL DRIVE

If mower does not self-propel or has a tendency to creep forward when drive is not engaged, an adjustment to the wheel traction control cable is necessary.

1. Stop engine. Remove key from switch.
2. Loosen bottom jam nut on wheel traction cable (Fig. 18).

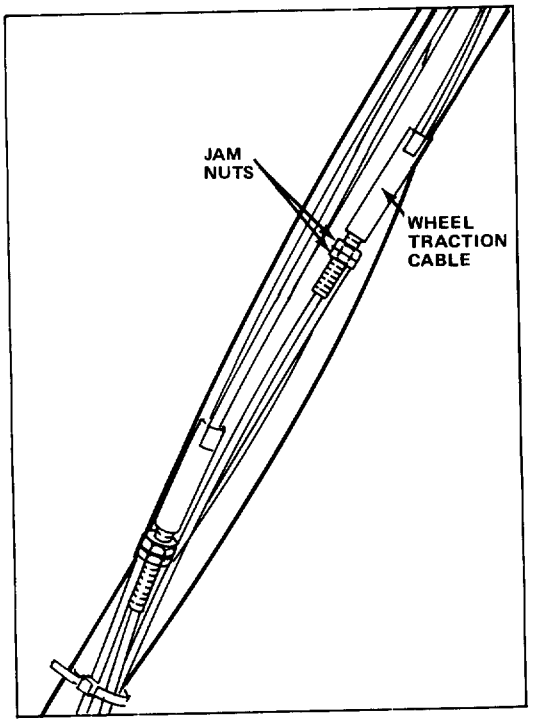

Figure 18

3. Lift control bar until some resistance is felt. Control bar should be 1½" from handle when properly adjusted (Fig. 19).
4. Move the top jam nut up to increase the clearance between the control bar and handle. Move top jam nut down to decrease the clearance between the control bar and the handle.
5. Repeat steps 3 and 4 until properly adjusted.
6. Tighten bottom jam nut to lock the adjustment.

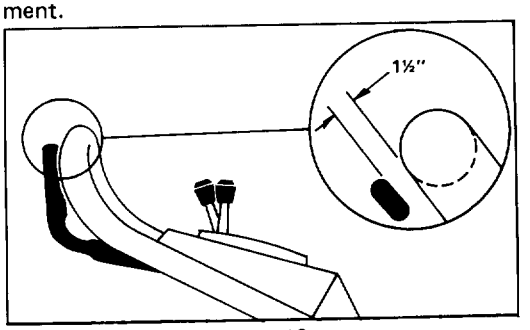

Figure 19

INSPECTING/REMOVING/SHARPENING BLADE

1. Stop engine. Remove key from switch. Pull wire off spark plug.
2. Drain gasoline from fuel tank: refer to Draining Gasoline, page 8.
3. Tip mower on its right side (Fig. 20). Avoid rotating blade. Starting problems may result.

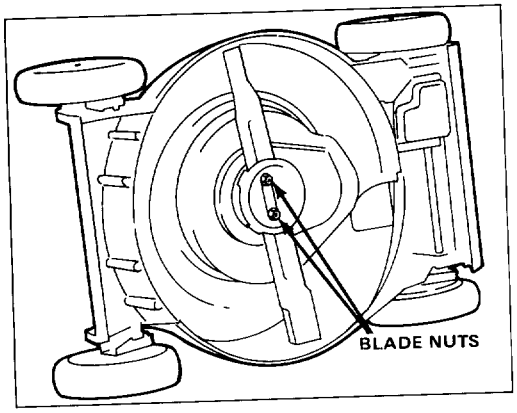

Figure 20

4. INSPECTING BLADE – Carefully examine blade for sharpness and wear, especially where flat and curved parts meet (Fig. 21A). Since sand and abrasive material can wear away the metal that connects the flat and curved parts of the blade, check blade before using the mower. If a slot or wear is noticed (Fig. 21B & C), replace blade. Refer to step 5.

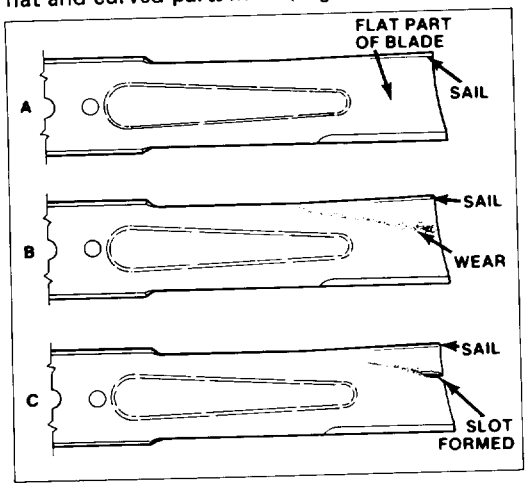

Figure 21

CAUTION

If blade is allowed to wear, a slot may form near the sail. Eventually a piece of blade may break off resulting in serious injury to yourself or a bystander.

5. REMOVING BLADE – Grasp end of blade using a rag or thickly padded glove. Remove blade nuts, anti-scalp cup, blade, blade spacer and rotating screen (Fig. 20 & 22).

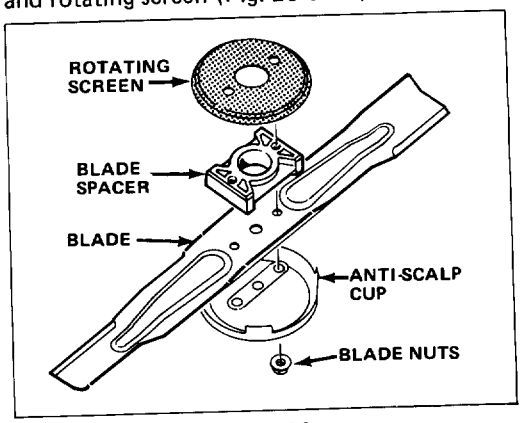

Figure 22

Note: For optimum performance, install new blade before cutting season begins. During the year file down small nicks to maintain the cutting edge.

6. SHARPENING BLADE – Using a file, sharpen top side of blade and maintain original cutting angle (Fig. 23). The blade will remain balanced if same amount of material is removed from both cutting edges.

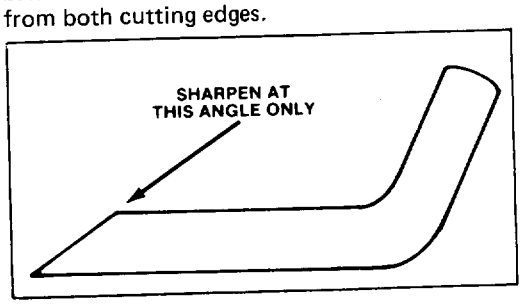

Figure 23

IMPORTANT: Check balance of blade by putting it on a blade balancer. An inexpensive balancer can be purchased at a hardware store. A balanced blade will stay in horizontal position and an unbalanced blade will settle to the heavy side. If blade is not balanced, file more metal off cutting edge on heavy end of blade.

7. Install rotating screen (outside flange pointing away from housing), blade spacer, sharp,

balanced blade and anti-scalp cup with blade nuts. Sail part of blade must point toward top of mower housing to assure correct installation. Tighten the bladenuts to 25-33 ft-lb.

LUBRICATION

After every 25 operating hours or when season ends, front and rear wheels must be lubricated.

1. Apply 2 or 3 drops of light oil on inside and outside of all wheel bolts. Spin wheels to distribute oil into bushings. Wipe up excess oil.

2. Move rear wheel height-of-cut levers to "C" setting. Wipe grease fittings with clean rag (Fig. 24). Install grease gun onto fitting and gently apply 1 or 2 pumps of #2 Multi-Purpose Lithium Base Grease.

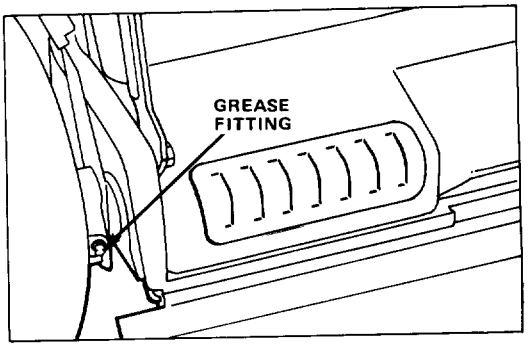

Figure 24

ADJUSTING BLADE BRAKE

Whenever a new blade brake cable or brake clutch belt is installed, an adjustment is required.

1. Stop engine. Remove key from switch. Pull wire off spark plug.

2. Remove (2) screws securing screen panel to top of mower housing (Fig. 25). Remove panel.

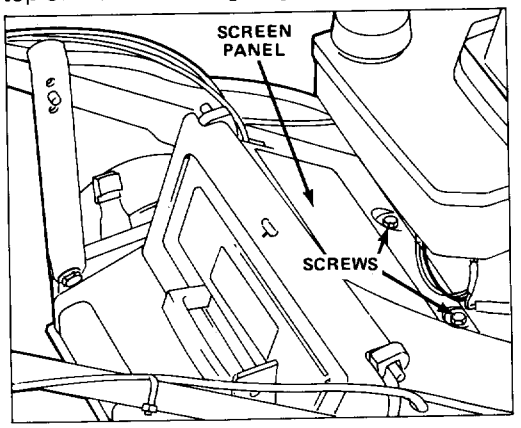

Figure 25

3. Move control bar down and lift up against mower handle. Cable is properly adjusted when cable end meets the plastic cable fitting in the mounting bracket (Fig. 26).

4. ADJUSTMENT (Fig. 27) – Loosen bottom jam nut on blade brake cable. Move top jam nut up to decrease clearance between the cable end and the plastic fitting. Move jam nut down to increase clearance between the cable end and the plastic fitting.

NOTE: Adjusting the top jam nut too high can cause the cable end to crush the plastic fitting when the control bar is moved up against the handle.

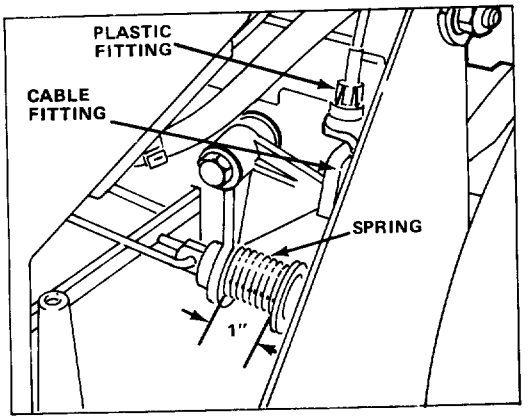

Figure 26

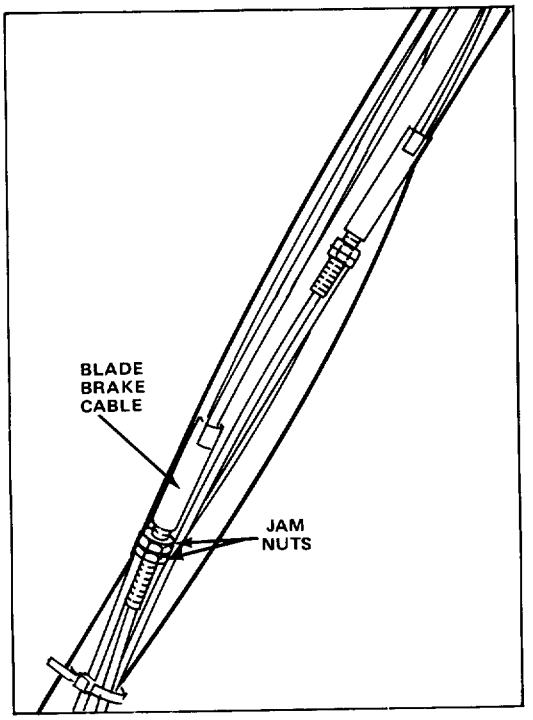

Figure 27

5. Tighten bottom jam nut to lock the adjustment.

NOTE: When new, the spring should compress to 1" with the blade brake clutch engaged and the control bar up against the handle. If the spring is only compressed to 1¼" when the blade brake is engaged, the clutch belt is worn out and should be replaced (Fig. 26).

CHECK CONTROL BAR OPERATION

Control bar should be checked periodically, at the beginning of each mowing season as a minimum, to assure the Blade Brake Clutch (BBC) system is operating properly.

1. Start engine; refer to Starting, page 5.
2. Push the control bar shown to the lowest position (Fig. 27). This "latches" the mechanism prior to engaging the blade.
3. Lift the control bar to the normal "blade engaged" position, about 2" below the handle (Fig. 28). The "fan" noise and bag inflation indicate that the mower blade is engaged and rotating.
4. Release the control bar. A "bang" should be heard and the blade should stop within 3 seconds. If the blade does not stop within 3 seconds when the control bar is released, stop using it until it has been serviced by an Authorized TORO Service Dealer.

If your unit stops with the required 3 seconds, the BBC system is operating properly. However, to detect the BBC system deterioration before it affects normal operaton, proceed to step 5.

5. Start engine if not already running.
6. Push the control bar down to its lowest position, latching the mechanism (Fig. 28).

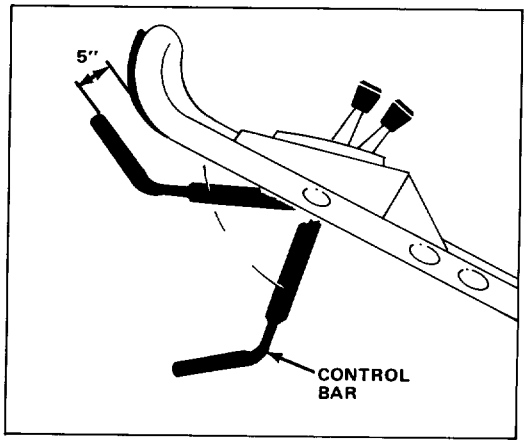

Figure 28

7. Slowly lift the control bar to a point where the bag just begins to inflate (about 5" below the handle). This indicates that the mower blade is engaged and has begun to rotate (Fig. 28).

NOTE: This intermediate position is not the "natural" operating position of the control bar. However, it has proven to be useful in early detection of latent BBC sticking which could create an unsafe condition later in the life of the mower.

8. Release the control bar.

NOTE: If a "bang" is heard and the bag immediately deflates, the control bar had been raised too far. Repeat steps 6, 7 & 8, but do not raise the handle as high in step 8.

If the control bar "hangs up" and the blade does not quickly stop, it indicates possible deterioration has set in, which could result in an unsafe operating condition. Have mower inspected by an Authorized TORO Service Dealer.

CAUTION. If the control bar "Hangs up" and the blade does not stop quickly, you should stop the blade before shutting the engine off. This can be done by raising the control bar to the normal operating position and releasing it.

ADJUSTING GROUND SPEED CONTROL FOR NEUTRAL

Whenever a new ground speed control cable is installed or if mower drives when ground speed control is in "N", an adjustment is required.

1. Stop engine and remove grass bag.
2. Remove access cover from rear of mower housing (Fig. 29).

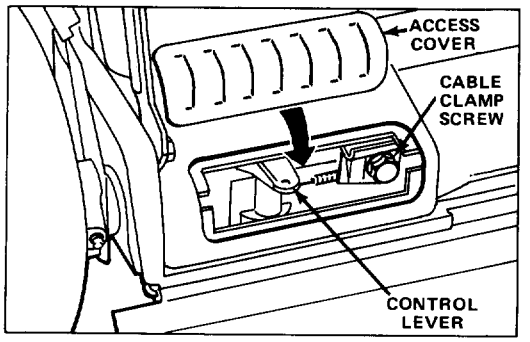

Figure 29

3. Move ground speed control to "N".
4. ADJUSTMENT (Fig. 29) — Loosen cable clamp screw until cable conduit slides. Push shift lever toward cable clamp screw. Push cable to the right to remove slack and tighten clamp screw.
5. Reinstall access cover and grass bag.

CHARGING BATTERY

Although a new battery is not fully charged, a partial charge of 4 hours will provide enough

energy for several starts. However, a new battery must be charged for 72 continuous hours to assure full charge. Also charge battery for 72 hours when mower is stored and in the spring. During normal operation, engine alternator keeps battery charged.

1. Stop engine and disconnect wire harness from battery terminal (Fig. 30).
2. If desired, battery can be removed by sliding it out of mounting slots. However, removal is not required if mower can be positioned near an electrical outlet.
3. Connect TORO electro charger to battery and plug into 120VAC power outlet. After charging battery for specified time, unplug charger and disconnect from battery.
4. Connect wiring harness to battery terminal.

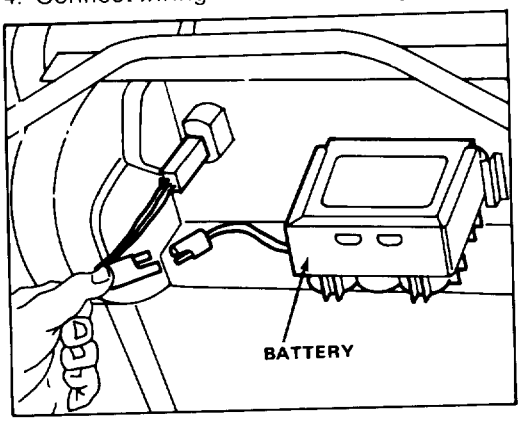

Figure 30

IMPORTANT: Only the TORO electro charger is recommended because other chargers could damage the battery. Always use charger indoors and charge battery at room temperature (+70° F) whenever possible. Do not charge battery longer than 72 hours because damage could result.

CLEANING MOWER HOUSING

To assure optimum performance, keep underside of mower housing and inside of discharge area clean.

1. Drain gasoline from fuel tank: refer to Draining Gasoline, page 8.
2. Tip mower on its right side (Fig. 31). Avoid rotating blade because starting problems may result.
3. Remove dirt and grass clippings that stick to housing by spraying it with a garden hose. Scrape out remaining debris with hardwood scraper. Avoid burrs and sharp edges.

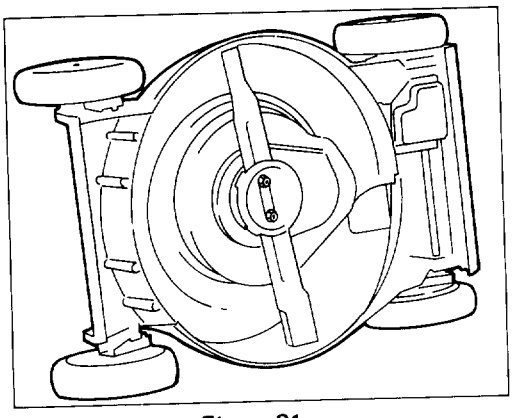

Figure 31

4. Clean discharge door and hinges of grass or debris that may impair operation of door. Use caution when cleaning door so you do not damage foam seal.
5. Remove screen panel and access cover on mower housing and clean around gear box and blade brake mechanism (Fig. 25 & 29).

PREPARING MOWER FOR STORAGE

1. Drain gasoline: refer to Draining Gasoline, page 8. Then start engine and let it idle until all fuel is consumed and engine stops. If gasoline is not drained, gum-like varnish deposits will form and cause poor engine operation, even starting problems.
2. Drain oil: refer to Changing Crankcase Oil, page 9. After oil is drained, do not fill crankcase with oil until the following steps (3-9) are completed.
3. Remove spark plug and pour 2 tablespoons of SAE 10W30 oil into hole in cylinder. Pull starter rope slowly to coat inside of cylinder. Install spark plug and tighten to 15 ft-lb (20.4 N m). DO NOT INSTALL WIRE ON SPARK PLUG.
4. Clean mower housing: refer to Cleaning Mower Housing, page 13.
5. Check condition of blade: refer to Inspecting/Removing/Sharpening Blade, page 10.
6. Tighten all nuts, bolts and screws.
7. Clean dirt and chaff from cylinder, cylinder head fins and blower housing. Also remove grass clippings, dirt and grime from external parts of the engine, shrouding and top of mower housing.
8. Clean air cleaner: refer to Servicing Air Cleaner, page 8.
9. Lubricate the wheels: refer to Lubrication, page 11.

MAINTENANCE

10. Touch up all rusted or chipped paint surfaces. Toro Re-Kote paint is available from an Authorized TORO Service Dealer.

11. Fill crankcase with oil: refer to Fill Crankcase With Oil, page 4.

12. Charge battery for 72 hours: refer to Charging Battery, page 12.

13. Store mower in a clean dry place. Cover mower to keep it clean and protected.

OPTIONAL SPARK ARRESTOR — PART #56-6730

If a spark arrestor is required because of local, state or federal regulations, it may be purchased at your local Authorized TORO Service Dealer. If mower is operated on any California forest, brush or grass covered land without a properly operating spark arrestor, the operator is violating state law, Section 4442 Public Resources Code.

PRODUCT IDENTIFICATION

A model number and a serial number decal is located at rear of mower housing, near the discharge door. Always refer to specific numbers on this decal in correspondence or when replacement parts are needed.

TORO SERVICE SUPPORT

If help — concerning safety, set-up, operation and maintenance or troubleshooting — is ever needed, contact the local Authorized TORO Service Dealer or Distributor. Refer to the "Yellow Pages" for assistance. In addition to skilled service technicians, the dealer and distributor have factory approved accessories and replacement parts. Keep your Toro all TORO. Buy genuine TORO replacement parts and accessories.

MAINTENANCE RECORD

Date	Hours Used	Oil Change	Air Cleaner Service	Lubrication	Spark Plug	Winter Storage

TROUBLESHOOTING

Problem	Possible Causes	Corrective Action
Engine does not start.	1. Throttle not in CHOKE position. 2. Gas tank is empty. 3. Air cleaner element is dirty. 4. Spark plug is loose. 5. Spark plug wire is loose or disconnected from spark plug. 6. Spark plug gap is incorrect. 7. Spark plug is defective. 8. Carburetor is flooded with gasoline.	1. Move throttle to CHOKE. 2. Fill fuel tank with gasoline. 3. Clean air cleaner element. 4. Tighten spark plug to proper specification. 5. Install spark plug wire on spark plug. 6. Set air gap to proper specification. 7. Install new, correctly gapped plug. 8. Remove air cleaner element and pull starter rope continuously until carburetor clears itself and engine starts. When engine starts, stop it and install air cleaner element.
Engine starts hard or loses power.	1. Dirt, water or stale gas in fuel tank. 2. Vent hole in fuel tank cap is plugged. 3. Air cleaner is dirty. 4. Flywheel key is sheared.	1. Drain gas and clean fuel tank. Fill tank with clean, fresh gasoline. 2. Clean or replace fuel tank cap. 3. Clean the air cleaner element. 4. Replace key.
Engine operates erratically.	1. Spark plug is defective. 2. Spark plug gapped incorrectly. 3. Air cleaner is dirty.	1. Install new, correctly gapped plug. 2. Set air gap to proper specification. 3. Clean the air cleaner element.
Engine idles poorly.	1. Air cleaner is dirty. 2. Oil level in crankcase is low. 3. Air slots in engine shroud are plugged. 4. Cooling fins and air passages under engine blower housing are plugged.	1. Clean the air cleaner element. 2. Add oil to crankcase. 3. Remove obstruction from slots. 4. Remove obstruction from cooling fins and air passages.
Engine misfires at high speed.	1. Air gap between electrodes of spark plug is too close.	1. Set air gap to proper specification.
Engine overheats.	1. Cooling air flow is restricted. 2. Oil level in crankcase is low. 3. Incorrect spark plug. 4. Flywheel key is sheared. Note: A Toro Service Dealer may have to be consulted is any of the above causes have occured.	1. Remove any obstruction from slots in shroud, blower housing, air passages, and cooling fins on engine. 2. Add oil to crankcase. 3. Install new, correctly gapped plug. 4. Replace key.
Mower vibrates abnormally.	1. Blade nuts are loose. 2. Cutter blade is unbalanced. 3. Crank shaft bent from hitting object.	1. Tighten blade nuts to proper specification. 2. Sharpen cutter blade and check the balance. Replace the blade if it cannot be balanced. 3. Replace crankshaft.
No traction drive.	1. Ground speed control adjusted incorrectly or broken. 2. Transmission drive belt loose or broken. 3. Traction Control Handle cable incorrectly adjusted or broken. 4. Damaged wheel and pinion gear assembly. 5. Malfunction in transmission assembly. **Note:** A Toro Service Dealer may have to be consulted if items 2-5 have occurred.	1. Adjust or replace ground speed control. 2. Adjust belt tension or replace belt. 3. Adjust or replace cable. 4. Repair as necessary. 5. Repair as necessary.
Mower creeps forward - traction control handle disengaged.	1. Debris caught between mower housing and transmission. (Belt under tension.) 2. Traction belt over-tensioned, i.e., belt not loose enough when disengaged.	1. Remove covers and clear debris away. 2. Reduce belt tension.

The Toro Promise

A Two Year Limited Warranty
On All
Gasoline Powered Consumer Products

The Toro Company promises to repair these TORO Products if defective in materials or workmanship. The following time periods from the date of purchase apply:

Residential Product	2 Years
Residential Products Used Commercially . . .	45 Days

The costs of parts and labor are included, but the customer pays the transportation costs. Just return any residential product to an Authorized TORO Service Dealer or TORO Distributor.

Should you feel your TORO is defective and wish to rely on The Toro Promise, the following procedure is recommended:

1. Contact any Authorized TORO Service Dealer, TORO Master Service Dealer, or TORO Distributor (the Yellow Pages of your telephone directory is a good reference source).
2. He will either instruct you to return the product to him or recommend another Authorized TORO Service outlet which might be more convenient.
3. Bring the product along with your original sales slip, or other evidence of purchase date, to the service dealer.
4. The servicing dealer will inspect the unit, advise you whether the product is defective and, if so, make all repairs necessary to correct the defect without extra charge to you.

If for any reason you are dissatisfied with the dealer's analysis of the defect or the service performed, you may contact us.

Write:

TORO Customer Service Department
8111 Lyndale Avenue South
Minneapolis, Minnesota 55420

The above remedy of product defects through repair by an Authorized TORO Service Dealer is the purchaser's sole remedy for any defect.

THERE IS NO OTHER EXPRESS WARRANTY. ALL IMPLIED WARRANTIES OF MERCHANTABILITY AND FITNESS FOR USE ARE LIMITED TO THE DURATION OF THE EXPRESS WARRANTY.

Some states do not allow limitations on how long implied warranty lasts, so the above limitation may not apply to you.

This Warranty applies only to parts or components which are defective and does not cover repairs necessary due to normal wear, misuse, accidents, or lack of proper maintenance. Regular, routine maintenance of the unit to keep it in proper operating condition is the responsibility of the owner.

All warranty repairs reimbursable under The Toro Promise must be performed by an Authorized TORO Service Dealer using Toro approved replacement parts.

Repairs or attempted repairs by anyone other than an Authorized TORO Service Account are not reimbursable under The Toro Promise. In addition, these unauthorized repair attempts may result in additional malfunctions, the correction of which is not covered by warranty.

THE TORO COMPANY IS NOT LIABLE FOR INDIRECT, INCIDENTAL OR CONSEQUENTIAL DAMAGES IN CONNECTION WITH THE USE OF THE PRODUCT INCLUDING ANY COST OR EXPENSE OF PROVIDING SUBSTITUTE EQUIPMENT OR SERVICE DURING PERIODS OF MALFUNCTION OR NON-USE.

Some states do not allow the exclusion of incidental or consequential damages, so the above exclusion may not apply to you.

This warranty gives you specific legal rights, and you may also have other rights which vary from state to state.

COUNTRIES OTHER THAN THE UNITED STATES OR CANADA

Customers who have purchased TORO products exported from the United States or Canada should contact their TORO Distributor (Dealer) to obtain guarantee policies for your country, province or state. If for any reason you are dissatisfied with your Distributor's service or have difficulty obtaining guarantee information, contact the TORO importer. If all other remedies fail, you may contact us at The Toro Company.

Compliance with Radio Interference Regulations Certified.
Certifie Conforme au Reglement sur le Brouillage Radioelectrique.

Litho in U.S.A.