FORM NO. 3313-459

TORO®

MODEL NO. 30561 — 80001 & UP

PARTS CATALOG

GRASS COLLECTOR — GROUNDSMASTER 200 SERIES

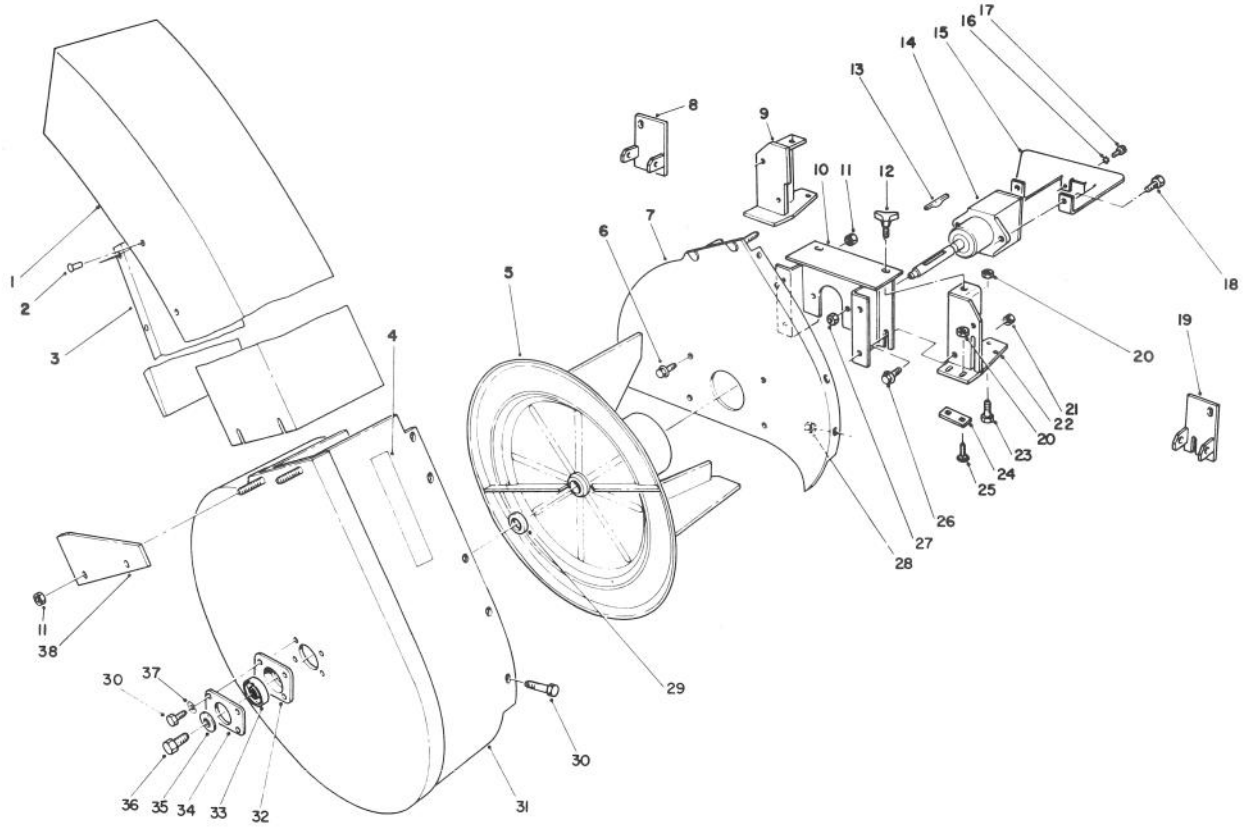

Ref. No.	Part No.	Description	No. Used
1	44-5300	Chute Assembly (Incl. Ref. #2 & 3)	1
2	3290-409	Rivet	8
3		Deflector — Chute	1
4	43-1110	Decal — Warning	1
5	56-4780	Impeller	1
6	3234-5	Screw — Flange	4
7	59-5070	Mounting Plate	1
8	59-4980	Pivot Bracket — Deflector L.H.	1
9	59-5050	Bracket L.H.	1
10	59-5140	Blower Mount	1
11	3296-29	Nut	8
12	62-6520	Knob	2
13	3257-40	Key — Hi Pro	1
14	53-4530	Gear Box Assembly	1

Ref. No.	Part No.	Description	No. Used
15	59-5150	Cover — Gear Box	1
16	3255-17	Lockwasher	2
17	3290-134	Capscrew	2
18	323-7	Capscrew	2
19	59-5000	Pivot Bracket — Deflector R.H.	1
20	32152-1	Locknut	6
21	3218-3	Nut — Jam	2
22	59-5090	Bracket R.H.	1
23	322-3	Capscrew	2
24	44-5460	Plate Bracket L.H.	2
25	3230-1	Bolt — Carriage	4
26	3234-11	Screw Flange	2
27	3296-44	Nut	2
28	3296-42	Nut	9
29	63-9710	Spacer — Bearing	1

©The Toro Company — 1988

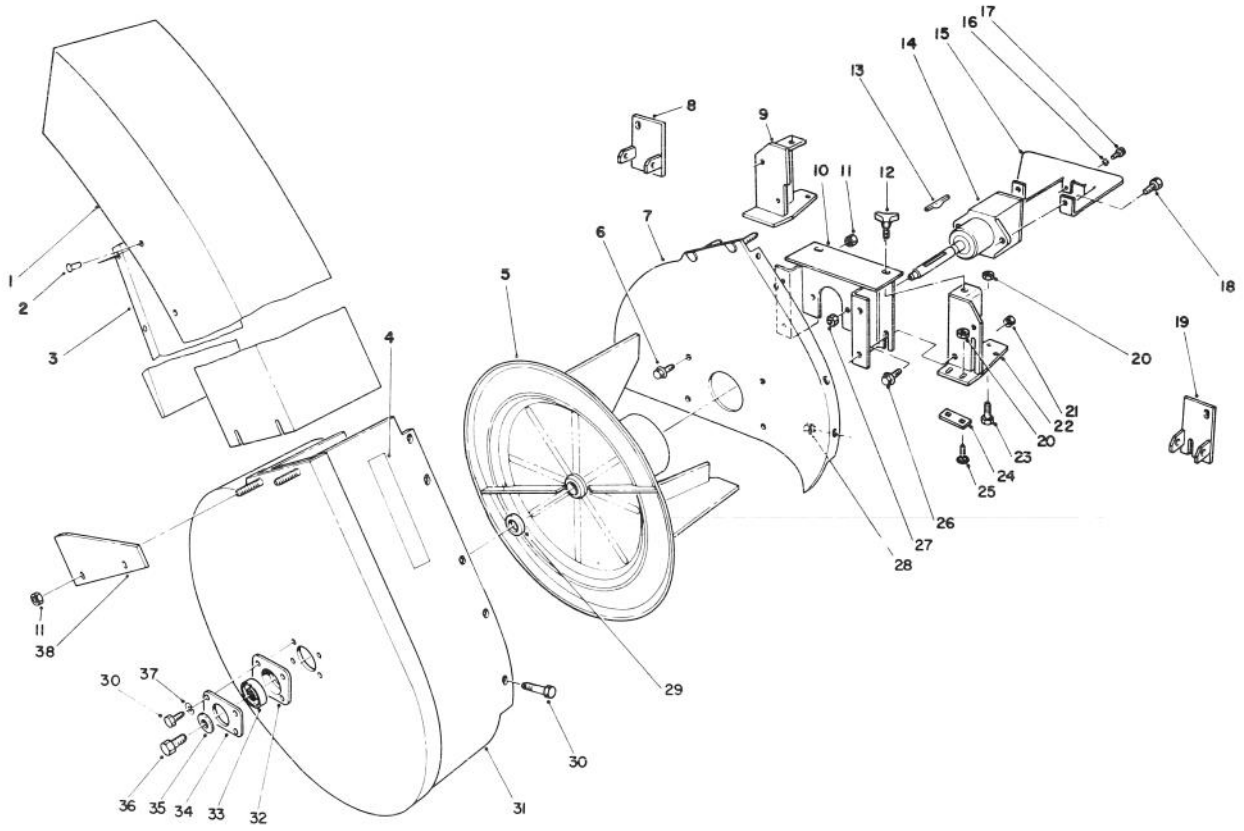

Ref. No.	Part No.	Description	No. Used
30	321-3	Capscrew	13
31	13-0269	Blower Housing (Incl. Ref. #4)	1
32	37-6730	Cup-Bearing	1
33	38-7820	Bearing — Ball	1
34	63-9700	Plate Cover	1

Ref. No.	Part No.	Description	No. Used
35	43-0940	Spacer — Blower Hub	1
36	3235-22	Capscrew	1
37	3253-3	Lockwasher	4
38	43-0960	Bracket — Chute	1

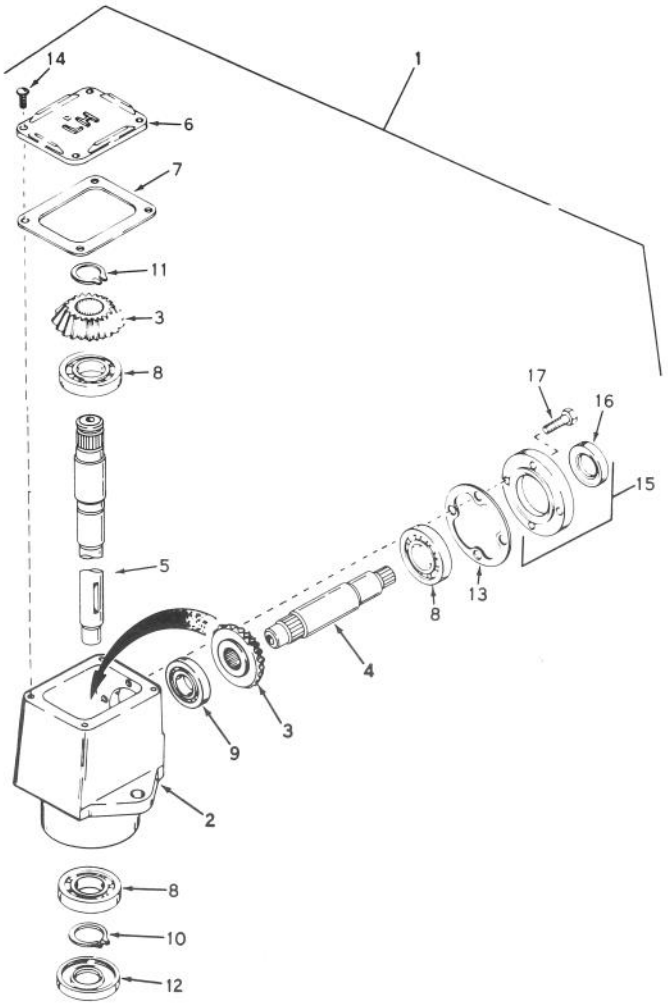

Ref. No.	Part No.	Description	No. Used
1	794402	Head Assy., Left Hand (Incl. Ref. #2-15)	1
2	770026A	Housing, Right Angle Drive	1
3	778046	Gear, Miter	2
4	776250	Shaft, Input	1
5	776249	Shaft, Output	1
6	772035	Cover	1
7	788028	Gasket, Cover	1
8	780034	Bearing, Ball	3
9	780024	Bearing, Ball	1

Ref. No.	Part No.	Description	No. Used
10	788019	Ring, Snap	1
11	788018	Ring, Snap	1
12	788029	Seal, Oil	1
13	788030	Gasket, Cap	1
14	792025	Screw, Rd. Hd. Self-Tap	4
15	786029	Cap & Seal Assy., Retainer (Incl. Ref. #16 & 17)	1
16	788031	Seal, Oil	1
17	792026	Screw, Hex. Hd.	4

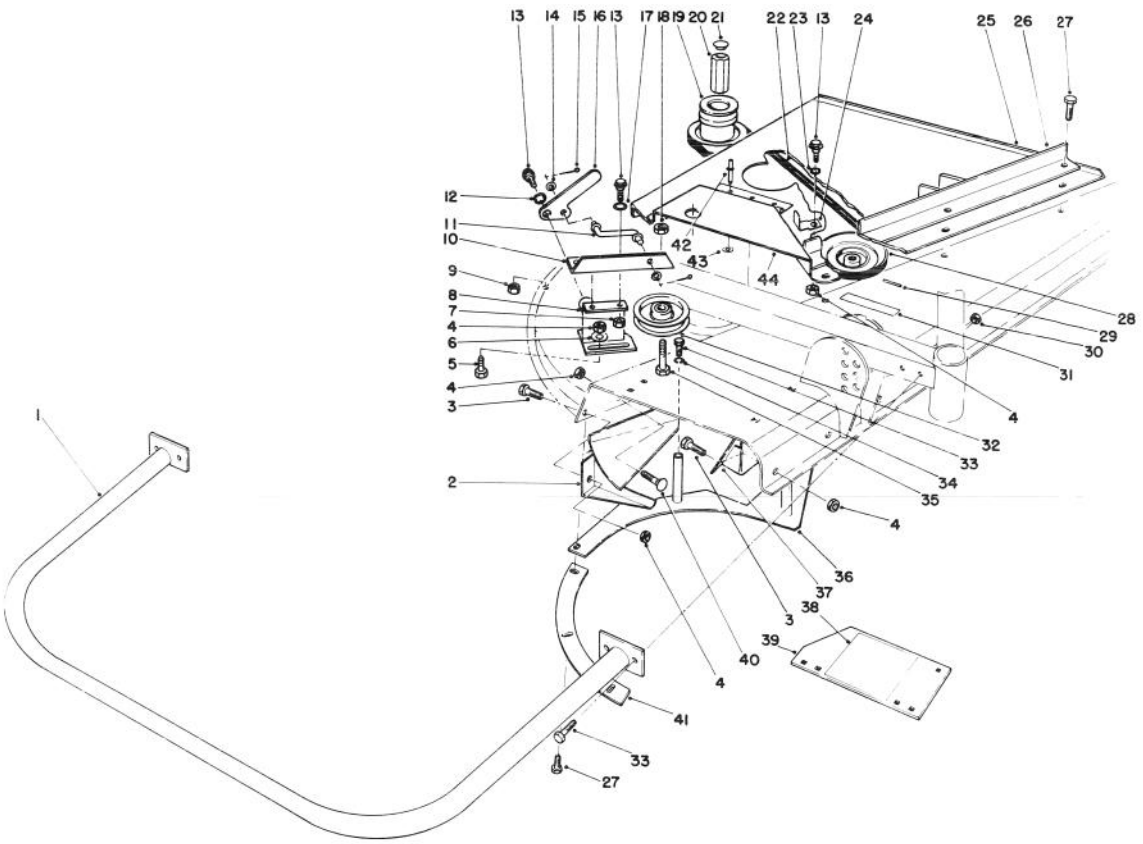

Ref. No.	Part No.	Description	No. Used
1	44-7570	Bumper	1
2	43-1060	Deflector — Rear	1
3	322-4	Screw — Hex. Hd.	4
4	32152-1	Nut — Lock	10
5	322-3	Screw Hex. Hd.	3
6	3256-56	Washer — Plain	3
7	3296-29	Nut — Hex	2
8	59-4920	Bracket — Idler Mounting	1
9	32152-4	Nut — Lock	4
10	59-4930	Slide — Idler	1
11	59-4940	Idler Rod	1
12	3290-211	Washer — Spring	1
13	19-1470	Bolt — Shoulder	4
14	3256-23	Washer — Plain	2
15	3272-6	Pin — Cotter	2
16	56-4900	Lever — Idler	1
17	23-1120	Washer — Flat	2
18	3296-44	Nut — Hex	1
19	59-5170	Pulley (Splined)	1
20	59-5190	Nut — Pulley	1
21	59-5310	Cover — Nut	1
22	59-5270	V-Belt	1
23	3290-211	Washer — Spring	1

Ref. No.	Part No.	Description	No. Used
24	59-5290	Latch	1
25	59-5280	Cover — Right	1
26	66-8790	Spring Bracket	1
27	321-4	Capscrew	7
28	56-4810	Pulley — Gear Box	1
29	32121-8	Pin — Roll	1
30	32152-2	Nut — Lock	4
31	43-1120	Decal — Warning	1
32	56-4920	Pulley — Idler	1
33	323-6	Capscrew	8
34	3253-21	Washer — Lock	4
35	323-7	Screw — Hex. Hd.	1
36	44-7770	Rear Shelf	1
37	67-7540	Front — Deflector	1
38	40-5730	Decal — Caution	1
39	44-5750	Cover Plate Assembly (Incl. Ref. #38)	1
40	3230-1	Carriage Bolt	2
41	44-7780	Shelf R.H.	1
42	3290-409	Rivet — Pop	3
43	3256-21	Washer	3
44	61-8630	Cover Pulley	1
*	44-5480	Blade — High Sail (18") (Opt.)	1

*Not Illustrated

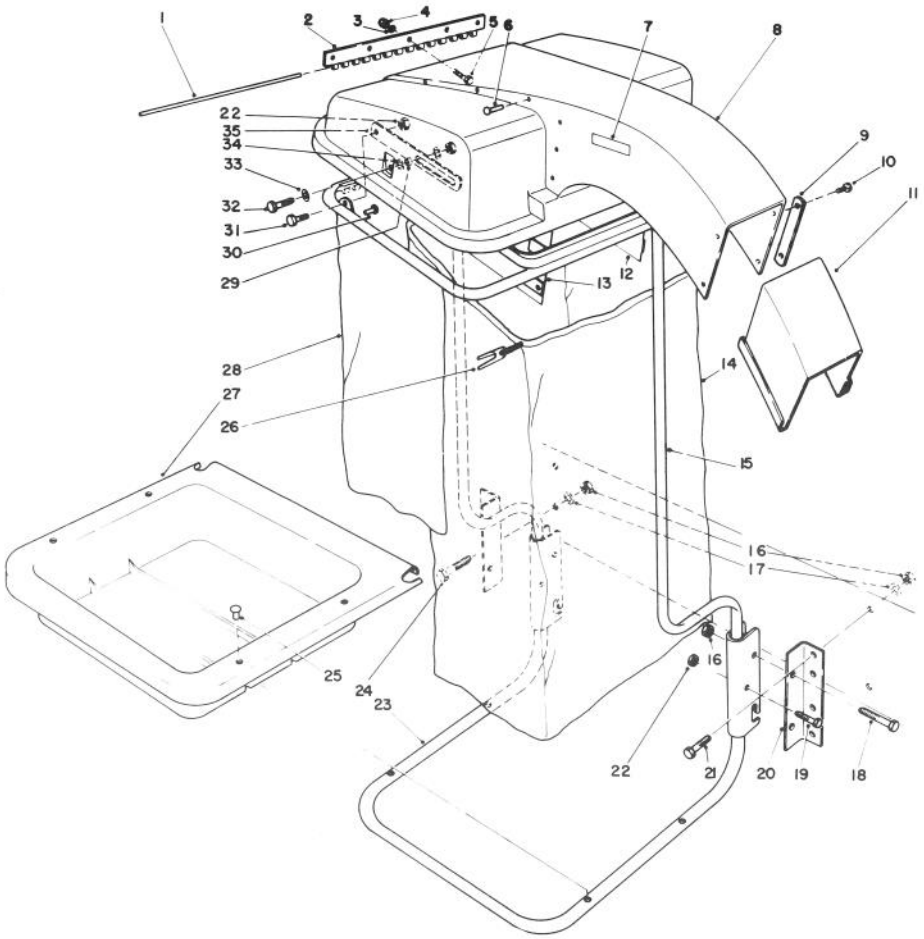

Ref. No.	Part No.	Description	No. Used
1	43-1000	Hinge Pin — Hood	1
2	43-0610	Hinge Half	1
3	3256-14	Washer — Flat	5
4	3296-2	Nut — Lock	5
5	3290-134	Screw — Machine Hex. Hd.	5
6	3290-412	Rivet — Pop	14
7	43-1100	Decal — Caution	2
8	67-7110	Hood Assembly (Incl. Ref. #2-7 & 12-13)	1
9	67-1730	Nut Plate	1
10	3274-31	Button Head Screw	1
11	67-1740	Snout Extension	1
12	43-0600	Screen — Left Hand	1
13	43-0570	Screen — Right Hand	1
14	43-0990	Bag — Cloth 32" (7 bushel capacity)	1
*	43-0980	Bag — Cloth 38" (10 bushel capacity) (Optional)	1
15	67-7500	Support Tube Assembly — (Upper (Incl. Ref. #25 & 28)	1
16	32152-2	Nut — Lock	12

Ref. No.	Part No.	Description	No. Used
17	3256-3	Washer — Plain	8
18	323-11	Screw — Cap Hex. Hd.	4
19	322-11	Screw — Cap Hex. Hd.	2
20	43-1010	Bracket — Frame	4
21	323-7	Screw — Cap Hex. Hd.	7
22	32152-1	Nut — Lock	6
23	43-0720	Support Tube Assembly — Lower (Incl. Ref. #25 & 27)	1
24	323-10	Screw — Cap Hex. Hd.	1
25	3290-409	Rivet — Pop	21
26	3-2781	Cord Retainer	1
*†	36-7770	Cord Retainer (optional)	1
27		Tray — Lower	1
28		Skirt — Bagging Frame	1
29	43-1020	Spacer — Pivot Arm	2
30	322-3	Screw — Hex. Hd.	2
31	322-4	Screw — Hex. Hd.	2
32	3256-56	Washer — Flat	2
33	3256-57	Washer — Fender	4
34	43-1050	Stop — Hood	2
*	44-9720	Template — Bracket	1

*Not Illustrated
†For use with 30 gallon plastic bag.

MAINTENANCE RECORD

MAINTENANCE RECORD

MAINTENANCE RECORD

Litho in U.S.A.