FORM NO. 3313-571

TORO®

MODEL NO. 30564 — 90001 & UP

OPERATOR'S MANUAL

62" SIDE DISCHARGE CUTTING UNIT

TORO®
THIS UNIT CONFORMS TO ANSI B71.4 - 1984

To assure maximum safety, optimum performance, and to gain knowledge of the product, it is essential that you or any other operator of the mower read and understand the contents of this manual before the engine is ever started. Pay particular attention to the SAFETY INSTRUCTIONS highlighted by this symbol —



The safety alert symbol means CAUTION, WARNING or DANGER — personal safety instruction. Failure to comply with the instruction may result in personal injury.



FOREWORD

The cutting unit has advanced concepts in engineering, design and safety; and if maintained properly, will give excellent service.

Since it is a high-quality product, Toro is concerned about the future use of the machine and safety of the user. Therefore, read this manual to familiarize yourself with proper set-up, operation and maintenance instructions. The major sections of the manual are:

1. Safety Instructions
2. Set-up Instructions
3. Before Operating
4. Lubrication
5. Maintenance

Certain information in this manual is emphasized. DANGER, WARNING and CAUTION identify personal safety-related information. IMPORTANT identifies mechanical information demanding special attention. Be sure to read this directive because it deals with the possibility of damaging a part of the machine. NOTE identifies general information worthy of special attention.

TABLE OF CONTENTS

	Page
SAFETY INSTRUCTIONS	2-4
SAFETY AND INSTRUCTION DECALS	4
SPECIFICATIONS	5
LOOSE PARTS	5
SET-UP INSTRUCTIONS	6-7
Install Lift Arms	6
Install Carrier Frame	6
Install Cutting Unit	7
Mount Rear Weight	7
BEFORE OPERATING	8
Adjusting Height-of-Cut	8
Adjusting Skid	8
OPERATING INSTRUCTION	9
Grass Deflector	9
Weight Transfer Adjustment	9
LUBRICATION MAINTENANCE	10
CUTTING UNIT MAINTENANCE	11-16
Troubleshooting	11
Separating Cutting Unit From Traction Unit	12
Servicing Bushings in Castor Arms	12
Servicing Castor Wheel & Bearing	13
Checking for Bent Blade	13
Replacing Cutter Blade	13
Checking Sail and Sharpening Cutter Blade	14
Correcting Cutting Unit Mismatch	15
Adjusting Idler Pulley	16
Adjusting Cover Latches	16
Replacing Drive Belt	17
IDENTIFICATION AND ORDERING	18
SERVICE INTERVAL CHART	18-19
THE TORO PROMISE	20

SAFETY INSTRUCTIONS



This safety alert symbol means CAUTION, WARNING or DANGER — "personal safety instruction". Read and understand the instruction because it has to do with safety. Failure to comply with the instruction may result in personal injury.

The cutting unit has been tested and verified for compliance with the B71.4 — 1984 specifications of the American National Standards Institute. However, improper use or maintenance by the owner or operator of the machine can result in injury. To reduce the potential for injury, follow these safety instructions.

BEFORE OPERATING

1. Read and understand the contents of this Operator's Manual before operating the machine. Become familiar with all controls and know how to stop quickly. A replacement manual is available by sending complete Model and Serial Number to:

The Toro Company
8111 Lyndale Avenue South
Minneapolis, Minnesota 55420

COPYRIGHT © ALL RIGHTS RESERVED
The Toro Company — 1988
MINNEAPOLIS, MN 55420 – U.S.A.

SAFETY INSTRUCTIONS

2. Do not allow children to operate the machine. Do not allow adults to operate the machine without proper instruction.

3. Remove all debris or other objects that might be picked up and thrown by the cutter blades. Keep all bystanders away from the mowing area.

4. Keep all shields and safety devices in place. If a shield, safety device or decal is defective or damaged, repair or replace it before operation is commenced. Also tighten any loose nuts, bolts and screws to assure machine is in safe operating condition.

5. Do not operate machine while wearing sandals, tennis shoes, sneakers or shorts. Also, do not wear loose fitting clothing which could get caught in moving parts. Always wear long pants and substantial shoes. Wearing safety glasses, safety shoes and a helmet is advisable and required by some local ordinances and insurance regulations.

6. Make sure interlock switches are adjusted correctly so engine cannot be started unless traction pedal is released – neutral position – and PTO is DISENGAGED.

7. Fill fuel tank before starting the engine. Avoid spilling fuel. Since fuel is flammable, handle it carefully.

A. Use an approved fuel container.

B. Do not fill tank while engine is hot or running.

C. Do not smoke while handling fuel.

D. Fill fuel tank outdoors and up to about one inch (25mm) from top of the tank, not the filler neck.

E. Wipe up any spilled fuel.

WHILE OPERATING

8. Do not run the engine in a confined area without adequate ventilation. Exhaust fumes are hazardous and could possibly be deadly.

9. Maximum seating capacity is one person. Never carry passengers.

10. Sit on the seat when starting the engine and operating the machine.

11. Before starting the engine:

A. Engage parking brake.

B. Ensure traction pedal is in neutral and PTO is in OFF, disengage position.

C. After engine is started, release parking brake and keep foot off traction pedal. Machine must not move. If movement is evident, the neutral return mechanism is adjusted incorrectly; therefore, shut engine off and adjust until machine does not move when traction pedal is released.

12. Using the machine demands attention, and to prevent loss of control:

A. Mow only in daylight or when there is good artificial light.

B. Watch for holes or other hidden hazards.

C. Do not drive close to a sand trap, ditch, creek or other hazard.

D. Reduce speed when making sharp turns and when turning on hillsides.

E. Avoid sudden stops and starts.

F. Before backing up, look to the rear and be sure no one is behind the machine.

G. Watch for traffic when near or crossing roads. Always yield the right-of-way.

13. The grass deflector must always be installed and in down position on the side discharge cutting unit. If the cutting unit discharge area ever plugs, disengage PTO and shut engine off before removing the obstruction.

14. Never raise the cutting unit while the blades are rotating.

15. If the cutting blades strike a solid object or the machine vibrates abnormally, disengage PTO, move throttle to SLOW, set parking brake and shut engine off. Remove key from switch to prevent possibility of accidental starting. Check cutting unit and traction unit for damage and defective parts. Repair any damage before restarting the engine and operating the cutting unit. Be sure blades are in good condition and blade bolts are tight.

16. Cut grass slopes carefully. Do not start, stop, or turn suddenly.

17. Do not touch engine or muffler while engine is running or soon after it is stopped. These areas could be hot enough to cause a burn.

18. Before getting off the seat:

A. Move traction pedal to neutral position and remove foot from pedal.

B. Disengage the PTO and set the parking brake.

C. Shut the engine off and remove key from ignition switch. Wait for all movement to stop before getting off the seat.

SAFETY INSTRUCTIONS

19. Lower the cutting unit to the ground and remove key from ignition switch whenever machine is left unattended.

MAINTENANCE

20. Remove key from ignition switch and disconnect high tension wires from spark plugs to prevent accidental starting of the engine when servicing, adjusting or storing the machine.

21. Perform only those maintenance instructions described in this manual. If major repairs are ever needed or assistance is desired, contact an Authorized Toro Distributor.

22. To reduce potential fire hazard, keep the engine free of excessive grease, grass, leaves and accumulations of dirt.

23. Be sure machine is in safe operating condition by keeping nuts, bolts and screws tight. Check the blade mounting bolts frequently to be sure they are tight (85 to 110 ft-lb).

24. Make sure all hydraulic line connectors are tight, and all hydraulic hoses and lines are in good condition before applying pressure to the system.

25. Keep body and hands away from pin hole leaks or nozzles that eject hydraulic fluid under high pressure. Use paper or cardboard, not hands, to search for leaks. Hydraulic fluid escaping under pressure can have sufficient force to penetrate skin and do serious damage. If fluid is ejected into the skin it must be surgically removed within a few hours by a doctor familiar with this form of injury or gangrene may result.

26. Before disconnecting or performing any work on the hydraulic system, all pressure in system must be relieved by stopping engine and lowering implement to the ground.

27. If the engine must be running to perform a maintenance adjustment, keep hands, feet, clothing and other parts of the body away from the cutting unit blades and other moving parts.

28. Do not overspeed the engine by changing governor settings. To be sure of safety and accuracy, have an Authorized TORO Distributor check maximum engine speed with a tachometer.

29. Engine must be shut off before checking oil or adding oil to the crankcase.

30. At the time of manufacture the cutting unit conformed to safety standards in effect for riding mowers. Therefore, to ensure optimum performance and safety, always purchase genuine TORO replacement parts and accessories. NEVER USE "WILL-FIT" REPLACEMENT PARTS AND ACCESSORIES MADE BY OTHER MANUFACTURERS. Using unapproved replacement parts and accessories could void the warranty of The Toro Company.



SAFETY AND INSTRUCTION DECALS

The following safety and instruction decals are installed on the machine. If any become damaged or illegible, replace it. The decal part number is listed in your parts catalog. Replacement can be ordered from your Authorized Toro Distributor.



ON LEFT SIDE OF CUTTING UNIT
(Part No. 68-7260)

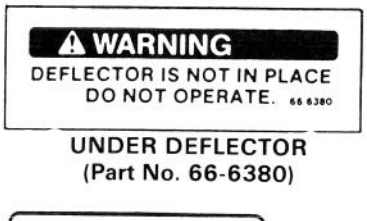

UNDER DEFLECTOR
(Part No. 66-6380)

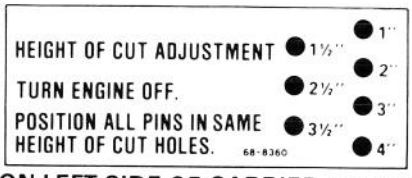

ON LEFT SIDE OF CARRIER FRAME
(Part No. 68-8360)



ON BOTH SIDES
OF CUTTING UNIT
UNDER COVERS
(Part No. 43-8480)

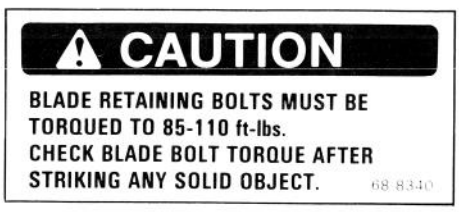

ON LEFT SIDE OF CUTTING UNIT
(Part No. 68-8340)



ON LEFT, CENTER AND RIGHT
SIDES OF DECK, UNDER COVERS
(Part No. 67-5360)



ON RIGHT AND LEFT OF CUTTING UNIT
(Part No. 66-1340)

SPECIFICATIONS

Type: Three blade, front mounted, rotary, right discharge.

Width Of Cut: 61 5/8 inch (1.56m).

Height Of Cut: Adjustable from 1 to 4 inches (25 to 102mm) in 1/2 inch (13mm) increments.

Cutter Housing: Cutter housing is made from 12 gauge (.1046 inch) steel and reinforced with 7 gauge (.1793 inch) steel.

Cutting Unit Drive: The gear box has 1.26 to 1 spiral bevel gears and is bolted to a steel plate which is isolation mounted to the deck using rubber cushions to reduce noise and vibration. The gear box is driven by a PTO shaft and the power is transmitted to the blades by a "AA" section belt. This belt is tensioned by a self tensioning idler pulley. Spindle shafts are .98 inch (25mm) in diameter and supported by two externally sealed, greaseable, tapered roller bearings.

Cutting Unit: Front mounted, free floating cutting unit with front caster wheels, two antiscalp rollers and one skid, and three heat treated steel blades 21 1/2 inches (55mm) long by 3/16 inch (5mm) thick by 2 1/2 inches (64mm) wide. Blade tip speed at 3250 engine RPM is 264 ft./sec. (80m/sec.).

Pneumatic Wheels: 8 in. (203 mm) dia. with greaseable roller bearings. (Inflation 20-30 P.S.I.).

Counter Balance Weight Required: A minimum of 35 lbs. (15.88 Kg) must be attached to the rear of the traction unit (1 Toro Rear End Weight, part no. 24-5790) when using the 62" cutting deck.

Trimming Ability: The deck is offset 10.25 inches (238mm) to the left of the center line of the traction unit. Trimming can be done with the left side of the deck providing a zero uncut circle (with wheel brakes).

Mowing Rate: Mows up to 3.1 acres/hr. (1.25 hectares/hr) at 5 mph (9.3 Km/hr).

Safety Certification: Meets ANSI B71.4-1984 Safety Specification for power lawn and garden tractors and lawn tractors.

Optional Equipment:

Phenolic Castor Wheel Assembly, Part No. 27-1050.

Leaf Mulching Kit, Model No. 30792.

Leaf Mulcher Discharge Plate, Part No. 57-0700.

LOOSE PARTS

DESCRIPTION	QTY.	USE
Lift Arms	2	Mount to traction unit.
Capscrews — 1/2-13 x 1-1/2" Carrier Frame	6 1	Mount to lift arms.
Castor Wheel Assembly Thrust Washer Lynch Pin	2 8 2	Install in frame. Install on castor fork shafts. Install on top hole of castor shafts.
Clevis Pin Hair Pin Cotter	4 4	Mount deck to suspension frame.
Cushion Shim	3	Used to shim rubber cushions for leveling of cutting deck.
Operator's Manual Commercial Products setup card Registration Card	1 1 1	

Note: The following parts are also required for mounting a Model 30564 (62") Cutting Unit.

Part No.	Description	Qty.
24-5790	Rear Weight	1
325-8	Capscrew 1/2-13x2"	2
3253-7	Lockwasher 1/2	2
3-8847	Spacer	2
3217-9	Nut 1/2	2
	OR	
24-5780	Rear Weight Kit	1

*Use minimum of one weight from kit.

Order parts from your Authorized Toro Distributor.

Note: One of the following Weight Transfer Kits are required for mounting a Model 30564 (62") Cutting Unit:

Kit Model	For Use On
30706	GM 220
*30703	Deluxe Kit for GM 220D or GM 224
*30713	Standard Kit for GM 220D or GM 224

*May also be used on GM 220 with adapter bar, part no. 66-8210.

SET-UP INSTRUCTIONS

DANGER

Do not start the engine and engage the PTO lever when PTO shaft is not connected to cutting unit gear box because the PTO shaft will rotate with enough force to cause serious injury.

INSTALL LIFT ARMS

1. Slide a lift arm under traction unit positioning as shown in Fig. 1. Align lift arm with axle bracket hole, insert pivot pin and secure with capscrew, flatwasher, lockwasher and cotter pin (supplied with traction unit).

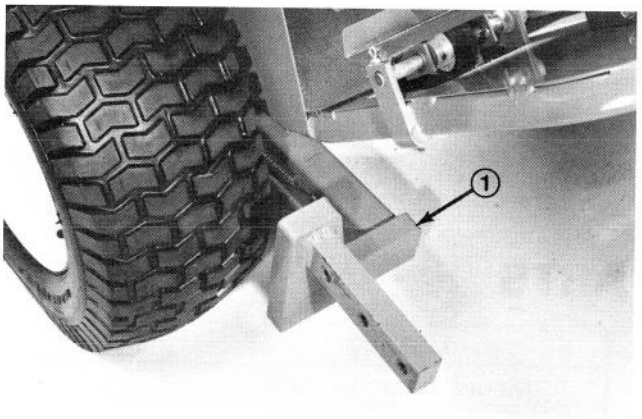

Figure 1

1. Lift arm

2. Align lift arm holes with cylinder rod hole, insert pin and secure with cotter pin (Fig. 2).

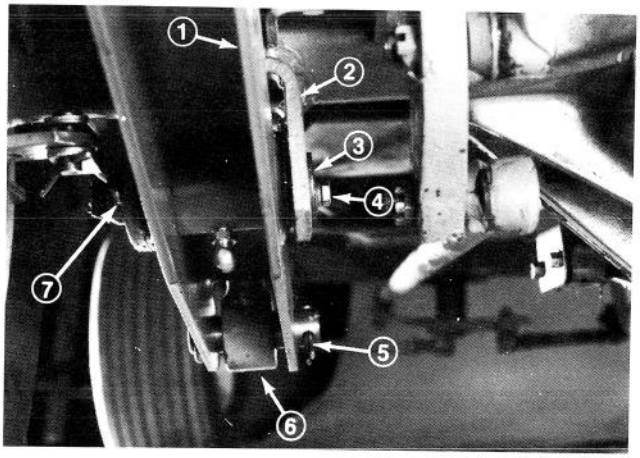

Figure 2

1. Lift arm
2. Axle bracket
3. Pivot pin
4. Capscrew
5. Cylinder pin
6. Cylinder end
7. Cotter pin

3. Remove cotter pins from clevis pins holding brake struts and yokes together, and discard the cotter pins. Keeping clevis pin in place, install short end of spring into hole in clevis pin to retain parts together. Connect other end of springs to slotted holes in frame. (Fig. 3).

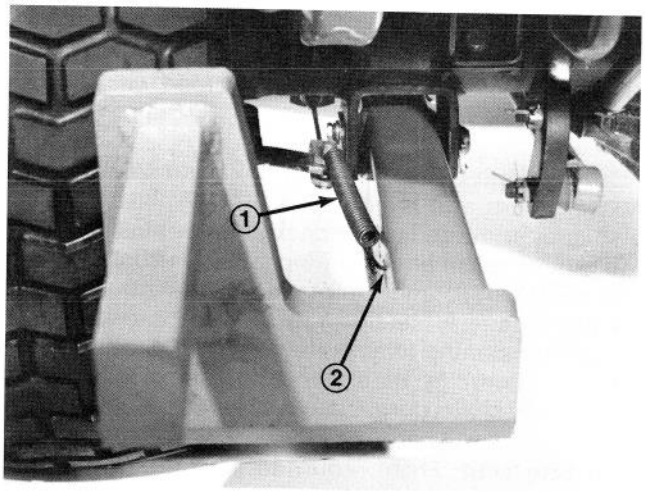

Figure 3

1. Brake return spring *2. Slotted hole*

INSTALL CARRIER FRAME

Note: Grease castor wheel shaft with No. 2 grease after installing and after initial operation of machine.

1. Remove Lynch Pins and two trust washers from each castor wheel assembly. Leave two thrust washers on each shaft, insert shafts into frame, install thrust washers and Lynch pins (Fig. 4).

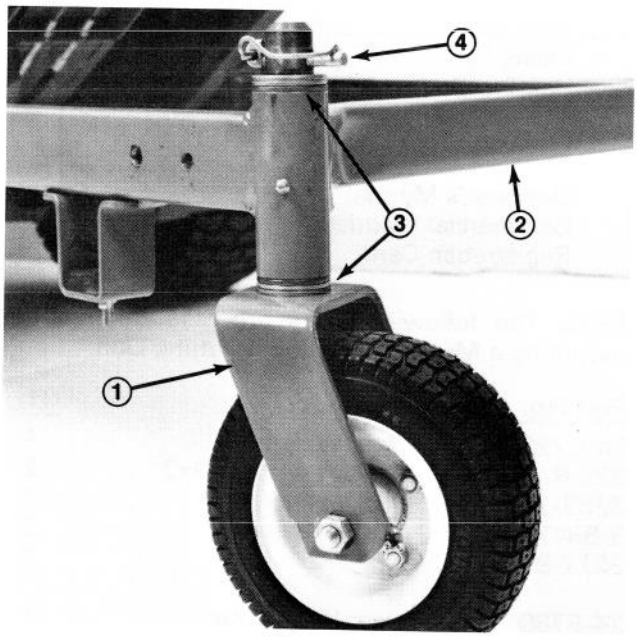

Figure 4

1. Castor wheel assembly
2. Frame
3. Thrust washers
4. Lynch pin

SET-UP INSTRUCTIONS

2. Slide carrier frame onto lift arms aligning mounting holes. Secure each side of carrier frame to lift arms with (3) 1/2 - 13 x 1-1/2" lg. capscrews. Torque capscrews to 70-80 ft-lb. (Fig. 5).

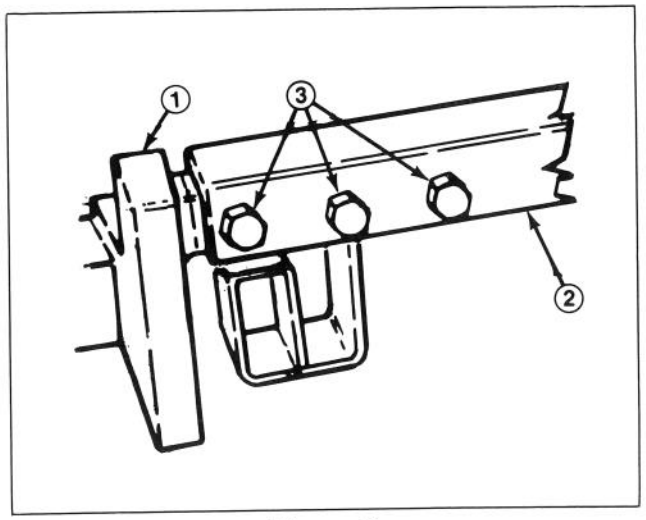

Figure 5

1. Lift arm
2. Carrier frame
3. Mounting capscrews

INSTALL CUTTING UNIT

1. Engage parking brake, be sure traction pedal is in neutral, PTO lever is in OFF position, start engine and raise frame.

2. Stop engine, remove clevis pins and hairpins from forward and rear height-of-cut brackets (Fig. 8), install cutting unit under carrier frame, align gearcase input shaft with PTO shaft and install shaft (Fig. 6).

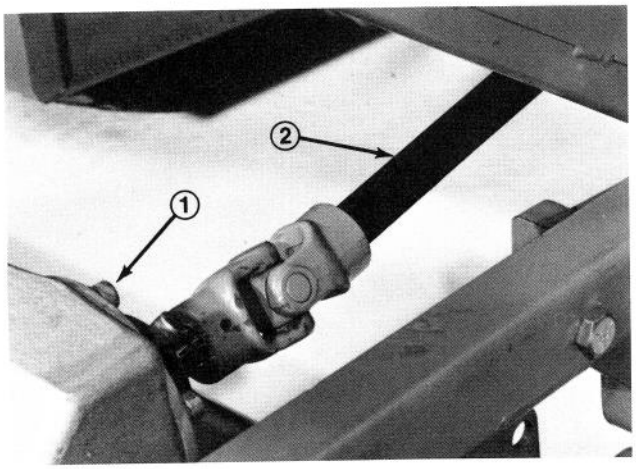

Figure 6

1. Gearcase
2. PTO shaft

3. Lower frame, align PTO shaft hole with gearcase input shaft hole and install roll pin (Fig. 7).

Note: On Groundsmaster 220-D (Diesel) also tighten bolts and locknuts on drive shaft.

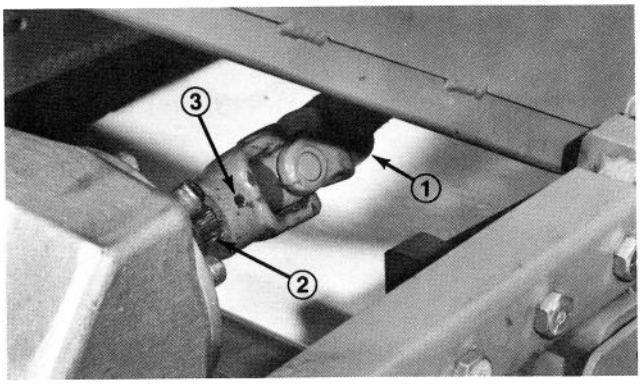

Figure 7

1. PTO shaft
2. Gearcase input shaft
3. Roll pin

4. Install clevis pins through desired height-of-cut bracket holes and frame to secure cutting unit to frame (Fig. 8). Secure all four pins with hairpins.

Note: Install weight transfer kit or counterbalance kit to cutting unit and traction unit at this time per instructions included with kit.

5. Grease all lubricating fittings and check level of oil in gearcase; refer to Lubrication maintenance, page 10.

MOUNT REAR WEIGHT

CAUTION

To insure proper handling and safety characteristics, a 35 lb. rear weight must be attached to Groundsmaster 220, 220D or 224 traction units.

1. Mount rear weight to back of machine with two capscrews, lockwashers, spacers, and nuts (Fig. 8). Spacer must be between weight and chassis. Order parts from your Authorized Toro Distributor.



Figure 8

1. Capscrews, lock washers, spacers and nuts

BEFORE OPERATING

ADJUSTING HEIGHT-OF-CUT

The height-of-cut is adjustable from 1 to 4 inches (25 to 102 mm) in 1/2 inch (13 mm) increments by relocating four clevis pins in different hole locations in brackets at each corner of the cutting unit (Fig. 9).

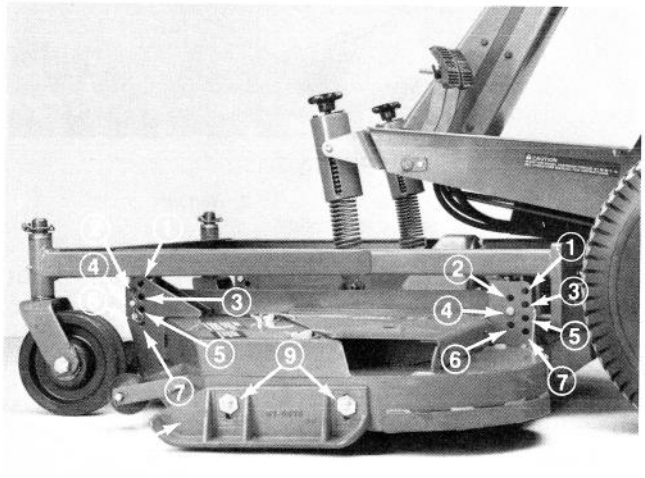

Figure 9

1. 1 in. (25 mm)
2. 1-1/2 in. (38 mm)
3. 2 in. (51 mm)
4. 2-1/2 in. (64 mm)
5. 3 in. (76 mm)
6. 3-1/2 in. (89 mm)
7. 4 in. (102 mm)
8. Skid
9. Flange nuts (2)

Note: All four pins should be in identical hole locations for proper operation.

Note: If cutting unit is to be used in 1 in. (25 mm) or 1-1/2 in. (38 mm) height-of-cut setting, rear cutting unit rollers must be repositioned in the top bracket holes (Fig. 10).

1. Remove cotter pins from roller shafts.

2. Slide shafts out of lower bracket holes, align rollers with top holes and install shafts.

3. Install cotter pins to secure assemblies.

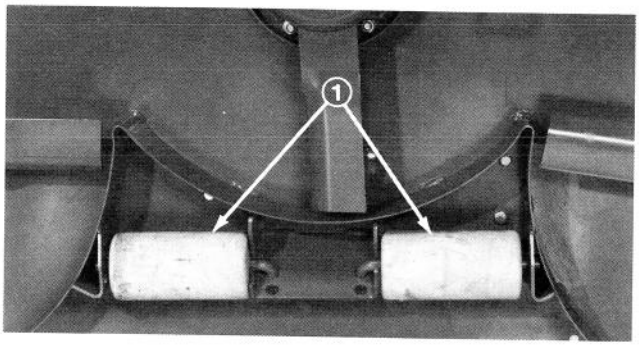

Figure 10

1. Rear cutting unit rollers

ADJUSTING SKID

1. After initial set up or if height-of-cut is changed, deck skid should also be adjusted.

1" H.O.C. – Skid all the way up
1½"-2" H.O.C. – Skid 1/4" -3/8" off ground
2½" and higher H.O.C. – Skid all the way down

2. Adjust skid by loosening flangenuts, positioning skid as desired, and retightening flangenuts (Fig. 9).

OPERATING INSTRUCTIONS

GRASS DEFLECTOR

WARNING

The grass deflector (Fig. 11) is a safety device that diverts grass and other foreign objects being discharged downwardly. WE STRONGLY RECOMMEND THAT THE DEFLECTOR BE IN ITS NORMAL OPERATING POSITION WHENEVER THE CUTTING UNIT IS ENGAGED. NEVER OPERATE CUTTING UNIT WITH THE DEFLECTOR REMOVED FROM THE CUTTING UNIT OR TIED/BLOCKED IN A RAISED POSITION, SINCE THE BLADES COULD THEN THROW DEBRIS A CONSIDERABLE DISTANCE WITH SUFFICIENT FORCE TO CAUSE PERSONAL INJURY OR DAMAGE TO PROPERTY. If the grass deflector is damaged, repair or replace the affected part(s).

NOTE

The deflector is spring loaded into its downward normal operating position, but the operator can temporarily swing it out of the way to facilitate loading in a trailer or when otherwise necessary.

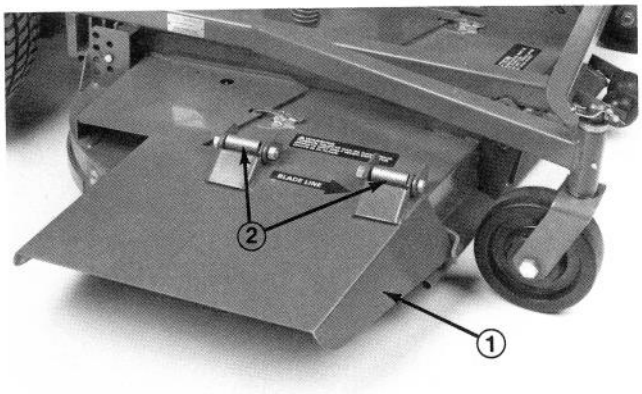

Figure 11

1. *Grass deflector*
2. *Springs*

WEIGHT TRANSFER ADJUSTMENT

The cutting unit performs best when the spring tension of the counter balance kit or weight transfer kit is adjusted so that the cutting unit does not ride too heavily on flat turf while not bounding excessively in uneven conditions. If the cutting unit scalps the turf and/or gives an uneven cut from one side to the other, there is too much weight on the deck and weight needs to be transferred to the traction unit (ie. adjust the springs up).

If, on the other hand, too much weight is transferred to the traction unit, the deck will flop around and give an uneven cut. Refer to installation instructions included with kit to adjust spring tension.

If the cutting unit does not perform properly, set the parking brake, raise the cutting unit into the transport position and stop the engine. Readjust the weight transfer tension and resume cutting.

CAUTION

Counterbalance spring(s) are in tension when deck is in lowered position. Always raise deck before adjusting or removing spring(s).

LUBRICATION MAINTENANCE

GREASE BEARINGS, BUSHINGS AND GEAR BOX

The cutting unit must be lubricated regularly. If machine is operated under normal conditions, lubricate castor bearings and bushings with No. 2 general purpose lithium grease or molybdenum base grease, after every 8 hours of operation or daily, whichever comes first. All other bearings, bushings and the gear box must be lubricated after every 50 hours of operation.

1. The cutting unit has bearings and bushings that must be lubricated, and these lubrication points are: caster spindle bushings (Fig. 12); castor wheel bearings (Fig. 12); blade spindle bearings (Fig. 13) and cutting unit frame pivot bushings (Fig. 14)

2. Lower cutting unit so castor wheels are on a level surface. Be sure all height-of-cut pins are in the same hole locations. Remove filler plug (Fig. 13) from gear box and check level of lubricant. If level of lubricant is low, add SAE 10W-40 or 10W-30 SF engine oil until level is up to bottom of filler hole. Wipe any metal particles off filler plug and install filler plug.

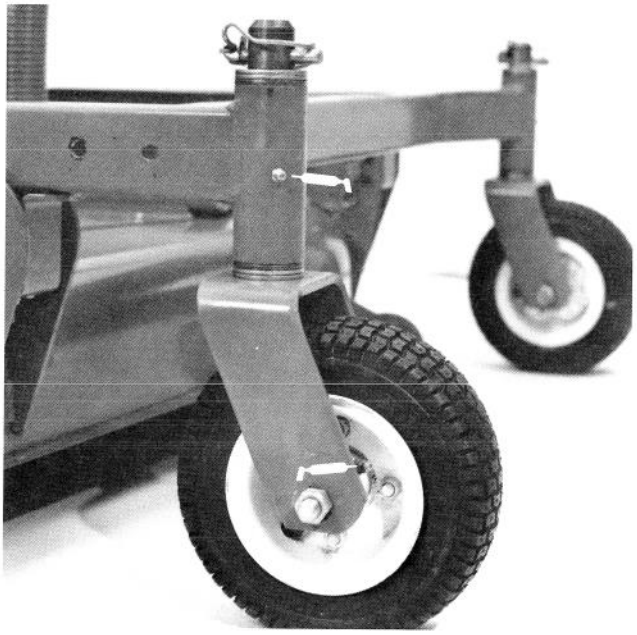

Figure 12

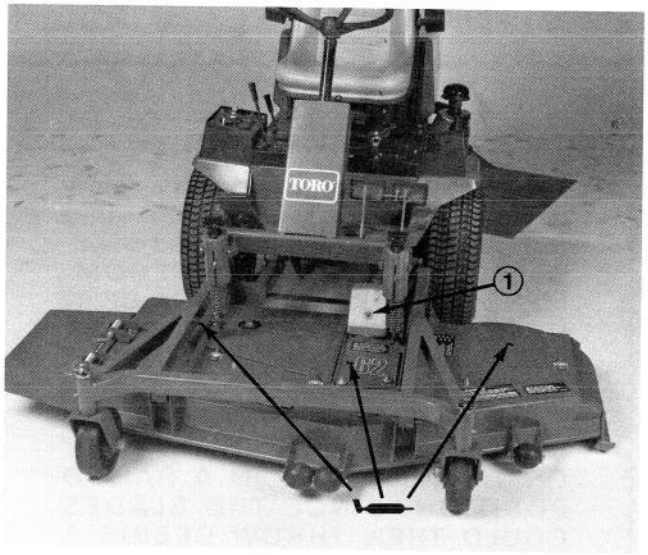

Figure 13

1. Filler plug

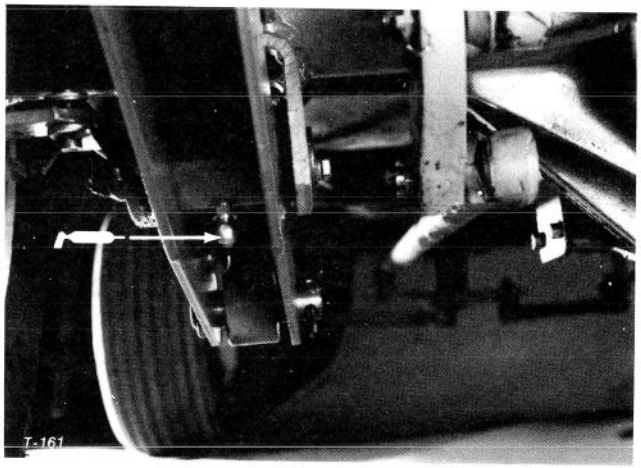

Figure 14

CUTTING UNIT MAINTENANCE TROUBLESHOOTING

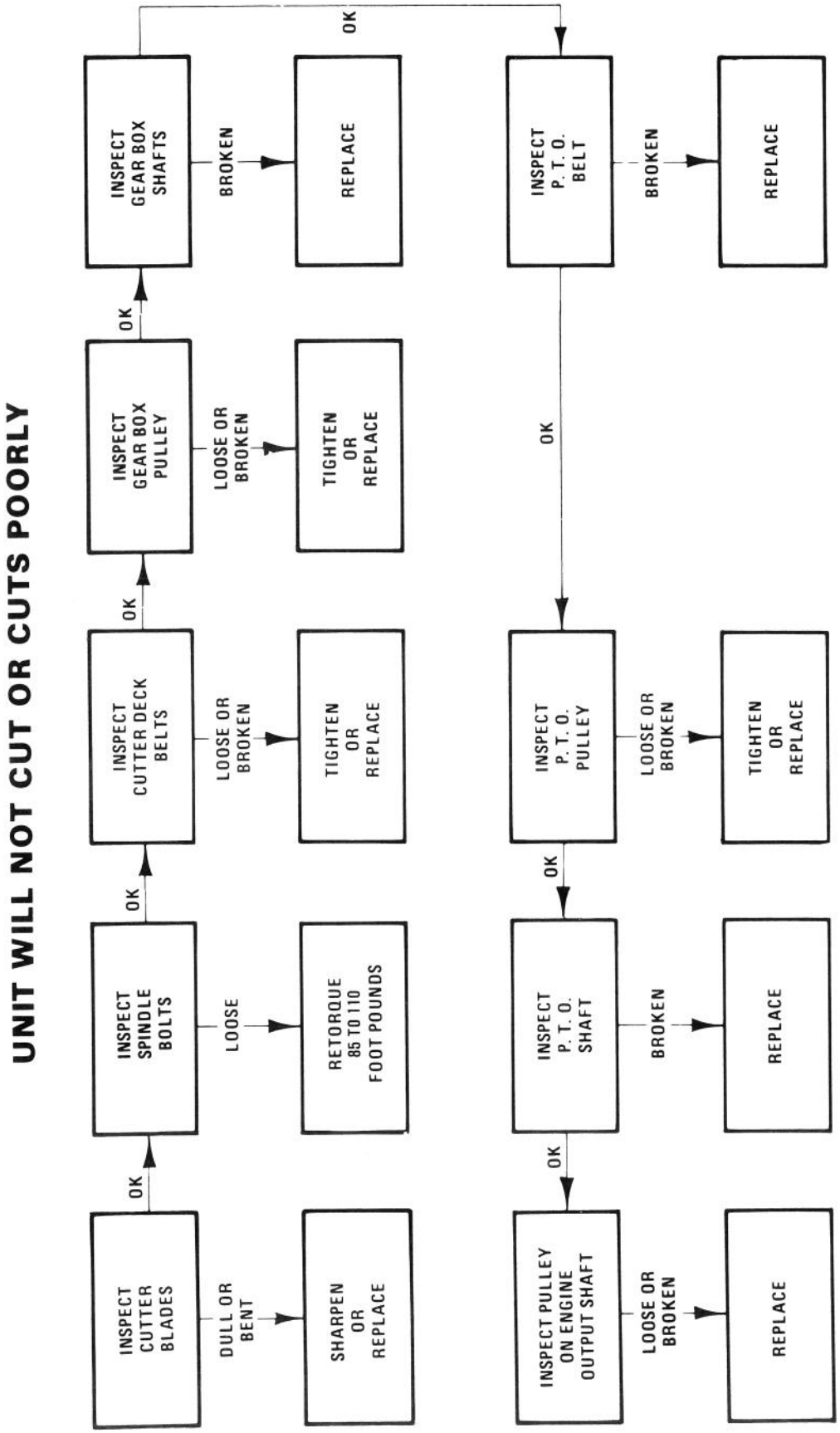

CUTTING UNIT MAINTENANCE

SEPARATING CUTTING UNIT FROM TRACTION UNIT

1. Position machine on level surface, raise cutting unit, engage parking brake, be sure traction pedal is in neutral position, PTO is in OFF position, shut engine off and remove key from switch.

CAUTION

Counterbalance springs are in tension when deck is in lowered position. Always raise deck before adjusting or removing springs.

2. Disconnect counterbalance kit or weight transfer kit from bracket as instructed in kit instructions.

3. Lower cutting unit, remove pins from height-of-cut brackets (4).

4. Drive roll pin out of yoke and input shaft of gear box (Fig. 15). Slide yoke off the input shaft. If traction unit will be used without the cutting unit, remove the PTO shaft from the traction unit; refer to PTO Shaft Removal, page 11.

Note: On Groundsmaster 220-D (Diesel), bolts and locknuts must also be loosened or removed.

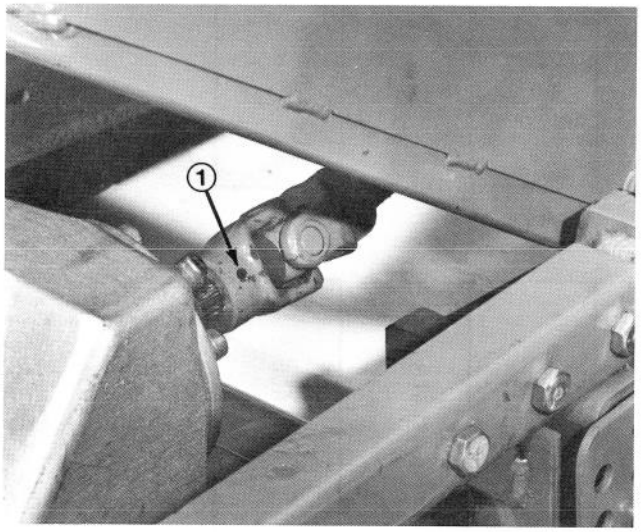

Figure 15

1. Roll pin

DANGER

Do not start the engine and engage the PTO lever when PTO shaft is not connected to gear box on cutting unit. If engine is started and PTO shaft is allowed to rotate, serious injury could result.

5. Start engine, raise carrier frame.

6. Stop engine and slide cutting unit away from traction unit and carrier frame.

SERVICING BUSHINGS IN CASTOR ARMS

The castor arms have bushings pressed into the top and bottom portion of the tube and after many hours of operation, the bushings will wear. To check the bushings, move castor fork back and forth and from side-to-side. If castor spindle is loose inside the bushings, bushings are worn and must be replaced.

1. Raise cutting unit and block it so it cannot fall accidentally.

2. Remove lynch pin and thrust washers from top of castor spindle.

3. Pull castor spindle out of mounting tube. Allow thrust washers to remain on bottom of spindle.

4. Insert pin punch into top or bottom of mounting tube and drive bushing out of tube (Fig. 15). Also drive other bushing out of tube. Clean inside of tubes to remove dirt.

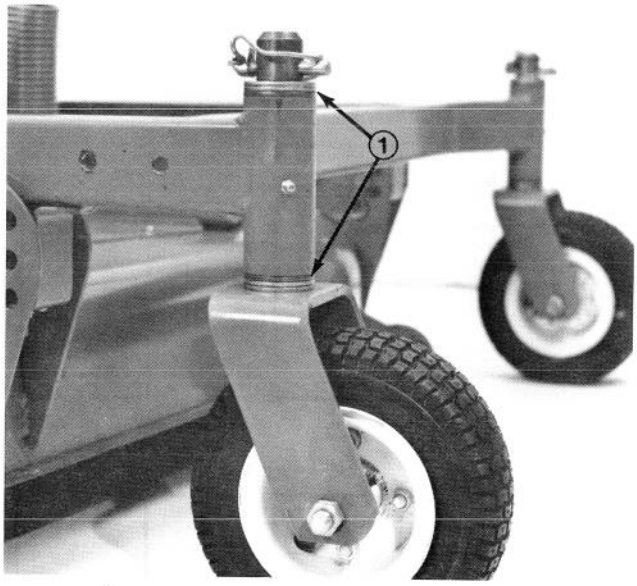

Figure 16

1. Bushings

5. Apply grease to inside and outside of new bushings. Using a hammer and flat plate, drive bushings into mounting tube.

6. Inspect castor spindle for wear and replace it if damaged.

7. Push castor spindle through bushings and mounting tube. Slide spacers onto spindle. Install lynch pin through castor spindle to retain all parts in place.

IMPORTANT: When bushings are installed, the inside diameter may collapse slightly, and this may not allow castor spindle to be installed. If castor spindle does not slide through new bushings and mounting tube, ream both bushings to inside diameter of 1.126 inches (28.6 mm).

SERVICING CASTOR WHEEL AND BEARING

The castor wheel rotates on a high-quality roller bearing and is supported by a spanner bushing. Even after many hours of use, provided that the bearing was kept well-lubricated, bearing wear will be minimal. However, failure to keep bearing lubricated will cause rapid wear. A wobbly castor wheel usually indicates a worn bearing.

1. Remove locknut from capscrew holding castor wheel assembly between castor fork (Fig. 17). Grasp castor wheel and slide capscrew out of fork.

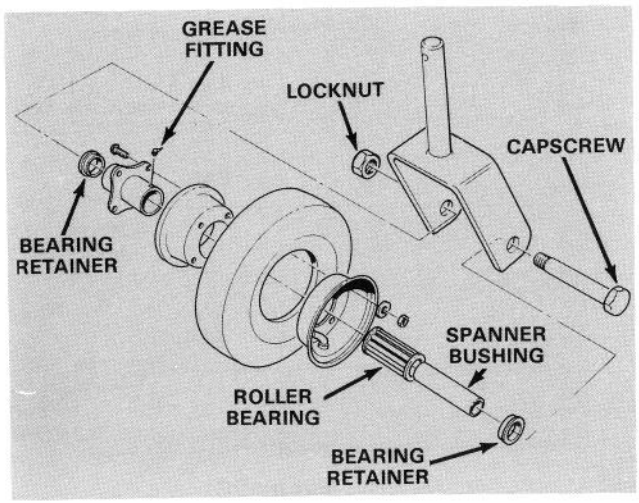

Figure 17

Note: Account for the two bearing retainers (Fig. 17).

2. Tip wheel to the side and allow roller bearing and spanner bushing to fall out (Fig. 17).

3. Inspect bearing, spanner bushing and inside diameter of wheel for wear. Replace defective parts.

4. To reassemble parts, slide spanner bushing through roller bearing. Pack bearing with no. 2 grease; then insert bearing w/spanner bushing into wheel.

5. Slide bearing retainer onto spanner bushing, and mount castor wheel assembly between the fork and capscrew and locknut. Tighten capscrew and locknut until spanner housing bottoms against inside of castor fork.

6. Pump more grease through grease fitting on wheel (Fig. 17) until bearing is greased thoroughly.

CHECKING FOR BENT BLADE

1. Raise cutting unit, engage parking brake, be sure traction pedal is in neutral, PTO is disengaged, stop engine, remove key from switch, and disconnect high tension wires from spark plugs.

Block cutting unit to prevent it from falling accidentally.

2. Rotate blade until the ends face forward and backward (Fig. 18). Measure from inside of cutting unit to cutting edge at front of blade (Fig. 18), and remember this dimension.

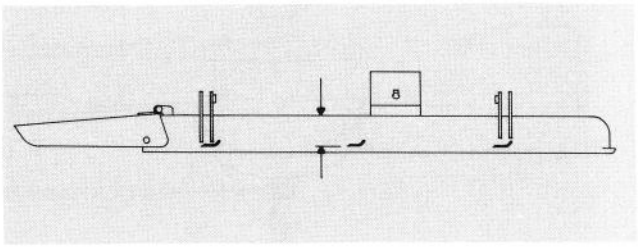

Figure 18

3. Rotate opposite end of blade forward. Measure between the cutting unit and cutting edge of blade at the same position as in step 2. The difference between dimensions obtained in steps 2 and 3 must not exceed 1/8 of an inch (3 mm). If dimension exceeds 1/8 of an inch (3 mm), replace the blade because it is bent: refer to Replacing Cutter Blade, page 13.

REPLACING CUTTER BLADE

The blade must be replaced if a solid object is hit, the blade is out-of-balance or if the blade is bent. Always use genuine TORO replacement blades to be sure of safety and optimum performance. Never use replacement blades made by other manufacturers because they could be dangerous.

CUTTING UNIT MAINTENANCE

WARNING

Do not try to straighten a blade that is bent, and never weld a broken or cracked blade. Always use a new blade to assure safety.

1. Raise cutting unit to its highest position, engage parking brake, be sure traction pedal is in neutral, PTO is disengaged, shut engine off and disconnect high tension wires from spark plugs. Block cutting unit to prevent it from falling accidentally.

2. Grasp end of blade using a rag or thickly padded glove. Remove bladebolt, lockwasher, anti-scalp cup and blade from spindle shaft (Fig. 19).

3. In sequence, install blade — sail facing toward cutting unit — and anti-scalp cup. Secure parts in place with bladebolt and lockwasher. Tighten bladebolt to 85-110 ft-lb.

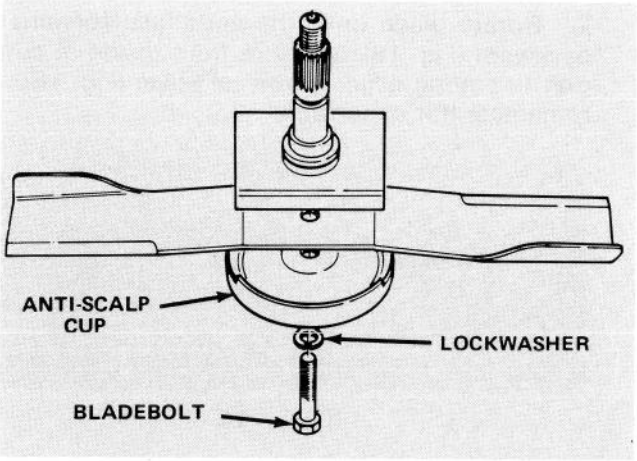

Figure 19

CHECKING SAIL AND SHARPENING CUTTER BLADE

Two areas must be considered when checking and servicing the cutter blade: one area is the sail, the other is the cutting edge. Both cutting edges and the sail, which is the turned up metal opposite the cutting edge, contribute to a good quality-of-cut. The sail is important because it pulls grass up straight, thereby producing an even cut. However, the sail will gradually wear down during operation, and this condition is normal. As the sail wears down, the quality-of-cut will degrade somewhat, although the cutting edges are sharp. The cutting edges of the blade must be sharp so the grass is cut rather than torn. A dull cutting edge is evident when tips of the grass appear brown and shredded. Sharpen the cutting edges to correct this condition.

1. Raise cutting unit to its highest position, engage parking brake, be sure traction pedal is in neutral, PTO is disengaged, stop engine and remove key from switch. Block cutting unit to prevent it from falling accidentally.

2. Examine cutting ends of the blade carefully, especially where the flat and curved parts of the blade meet (Fig. 20-1). Since sand and abrasive material can wear away the metal that connects the flat and curved parts of the blade, check the blade before using the mower. If wear is noticed (Fig. 20-2), replace the blade.

DANGER

If blade is allowed to wear, a slot will form between the sail and flat part of the blade. (Fig. 20-3). Eventually, a piece of the blade may break off and be thrown from under the housing, possibly resulting in serious injury to yourself or bystander.

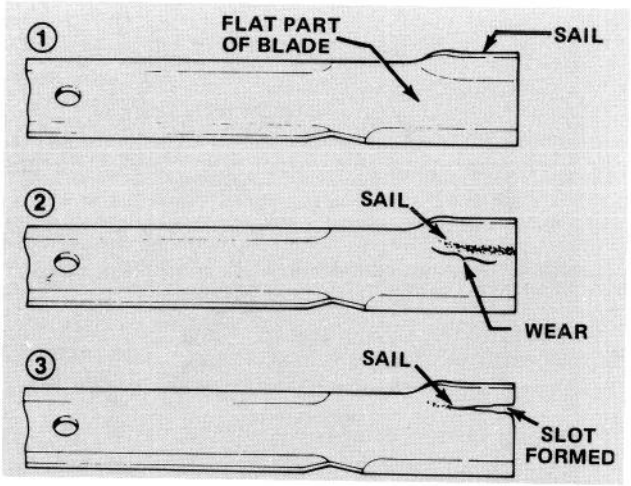

Figure 20

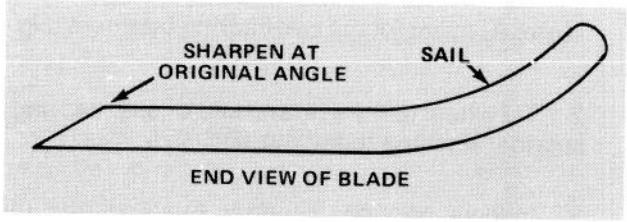

Figure 21

CUTTING UNIT MAINTENANCE

3. Inspect cutting edges of all blades. Sharpen the cutting edges if they are dull or nicked. Sharpen only the top side of the cutting edge and maintain the original cutting angle to make sure of sharpness (Fig. 21). The blade will remain balanced if same amount of metal is removed from both cutting edges.

Note: Remove the blades and sharpen them on a grinder: refer to Removing Cutter Blade, steps 1 and 2, page 13. After sharpening the cutting edges, reinstall blade and anti-scalp cup with bladebolt and lockwasher. Blade sails must be on top of blade. Tighten bladebolt to 85-110 ft-lb.

4. Remove blocking from cutting unit and lower it to the ground.

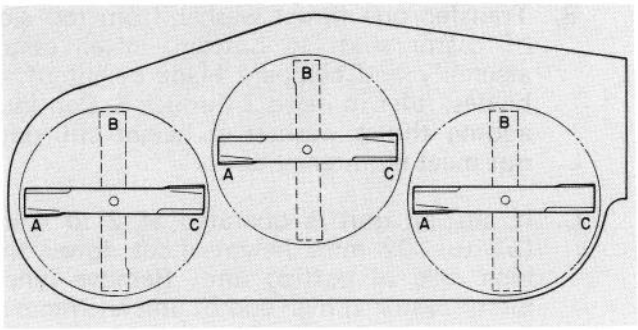

Figure 22

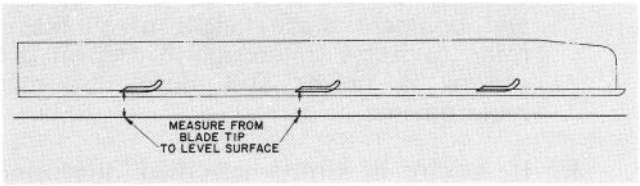

Figure 23

CORRECTING CUTTING UNIT MISMATCH

If one cutter blade cuts lower than the others, correct as follows:

1. Lower cutting unit onto level surface, engage parking brake, be sure traction pedal is in neutral, PTO is disengaged, shut engine off and disconnect high tension wires from spark plugs. Make sure tire pressure is equal in all tires.

2. Raise height-of-cut to 4 in. (102 mm) position; refer to Adjusting Height-Of-Cut, page 9.

3. Rotate blades so tips line up with one another. Tips of the adjacent blades must be within 1/8 in. (3 mm) of each other. If tips are not within 1/8 in. (3 mm) of each other, proceed to step 8 and add shims between spindle housing and bottom of cutting unit.

4. Position all three blades in the "A" position (Fig. 22) and measure from level surface to the bottom of the tip end of each blade (Fig. 23).

5. Note measurement attained at "A", rotate blades to "B" position (Fig. 22), measure distance of all blades to level surface and note dimensions (Fig. 23).

6. Rotate blades to "C" position, measure and note distance measured (Fig. 22 & 23).

7. Equalize side to side measurements as follows:

   A. Cutting units usually operated at 1 to 2 in. (25 to 51 mm) height-of-cut should have the low side of the cutting unit raised. Remove the lynch pin securing castor wheel on low end (Fig. 24) and remove castor assembly.

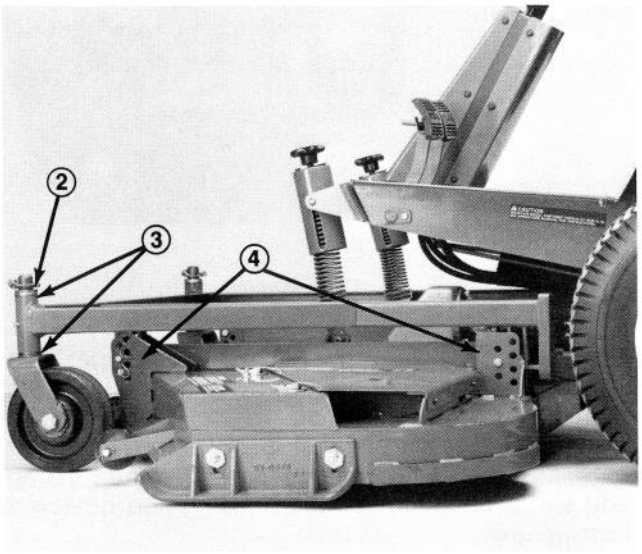

Figure 24

1. Castor wheel (2)
2. Lynch pin (2)
3. Thrust washers (6 on each castor wheel)
4. Height of cut setting (4)

B. Transfer one thrust washer from top side of castor shaft to bottom, install castor assembly and compare blade height of all blades; refer to items 3 through 6. Continue adding thrust washers if height still does not meet requirements.

C. If cutting unit is operated at 2 to 4 in. (51 to 102 mm) height-of-cut, lower the high side of cutting unit. Remove lynch pin of castor at high end of unit and remove castor assembly (Fig. 24).

D. Transfer one thrust washer from bottom of castor shaft to top side, install assembly and compare blade height of all blades; refer to items 2 through 6. Repeat procedure if height still does not meet requirements.

E. If height is within specified dimension, install lynch pin, and set height-of-cut to proper height.

8. Check to make sure front height-of-cut pins are resting properly on frame cushions (Fig. 25). If pins are not resting properly, place a shim or shims under cushion to raise it for proper alignment.

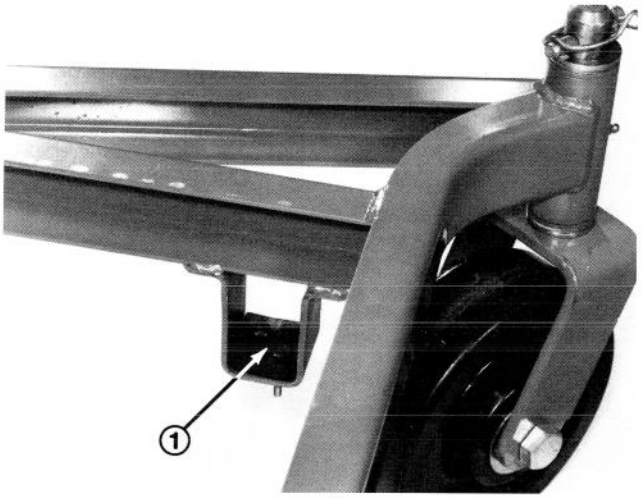

Figure 25

1. Frame cushions

9. Compare measurements at various positions. All dimensions must be equal within 1/4 in (6 mm) from one another. The difference between dimensions must not exceed 1/4 in. (6mm). If difference exceeds 1/4 in. (6 mm), proceed to step 10 and add shims between spindle housing and bottom of cutting unit.

10. Remove capscrews, flatwashers and locknuts from outer spindle in the area where shims must be added. To raise or lower the blade, add a shim, Part No. 3256-24, between spindle housing and bottom of cutting unit. Continue checking alignment of blades and adding shims until tips of blades are within the required dimension.

ADJUSTING IDLER PULLEY

The idler pulley applies force against the belt so power can be transmitted to the blade pulleys. If the idler is not tensioned against the belt with sufficient force, maximum power will not be transmitted to the pulleys. Tension on the belt requires 40 to 50 ft-lb (54 to 68 N·m) of torque on the large nut, which applies force against the belt. If the idler is not adjusted to these specifications, adjustment is necessary.

1. Lower cutting unit, engage parking brake, be sure traction pedal is in neutral position, PTO is disengaged, stop engine and remove key from switch.

2. Unhook latches securing center cover to top of cutting unit (Fig. 26). Remove cover from cutting unit.

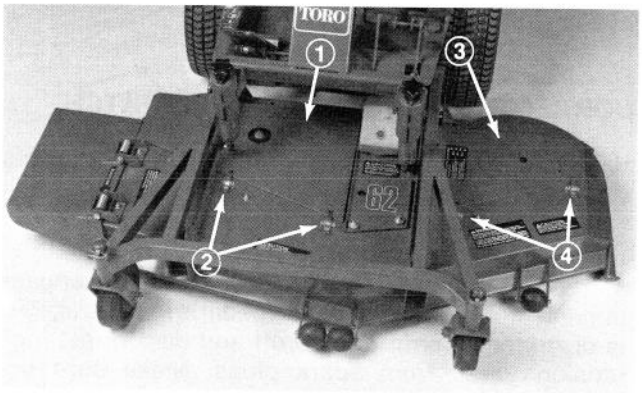

Figure 26

1. Center cover
2. Latches (2)
3. Left cover
4. Latches (2)

3. Loosen two nuts securing idler plate in place (Fig. 27). Using a socket and torque wrench, tighten the idler adjusting nut (Fig. 27) until proper torque value is achieved.

4. Hold the torque against the belt and tighten the two nuts so idler plate is held securely in place (Fig. 27). Release the idler adjusting nut, install cover, and secure latches.

ADJUSTING COVER LATCHES

If cutting unit covers fit loose, latch tension may be adjusted by loosening latch mounting screws, and sliding latches (slotted mounting holes in cutting unit) to proper position.

CUTTING UNIT MAINTENANCE

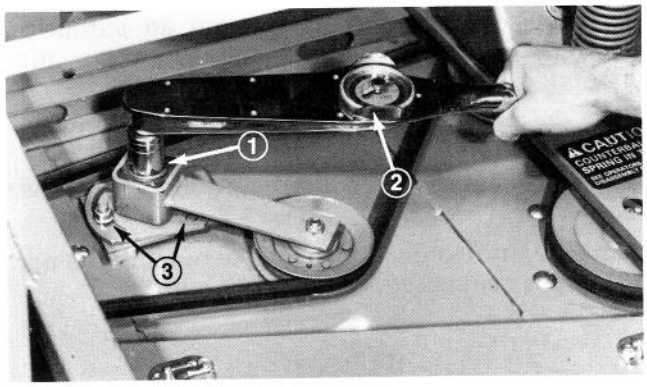

Figure 27

1. Idler adjusting nut
2. Torque wrench
3. Nuts (2)

REPLACING DRIVE BELT

The blade drive belt, tensioned by the adjustable idler, is very durable. However, after many hours of use, the belt will show signs of wear. Signs of a worn belt are: squealing when belt is rotating, blades slipping when cutting grass, frayed edges, burn marks and cracks. Replace the belt if any of these conditions are evident.

1. Lower cutting unit to the floor, engage parking brake, be sure traction pedal is in neutral, PTO is disengaged and stop the engine and remove key from switch.

2. Unhook latches securing right cover to top of cutting unit (Fig. 28). Remove cover from cutting unit.

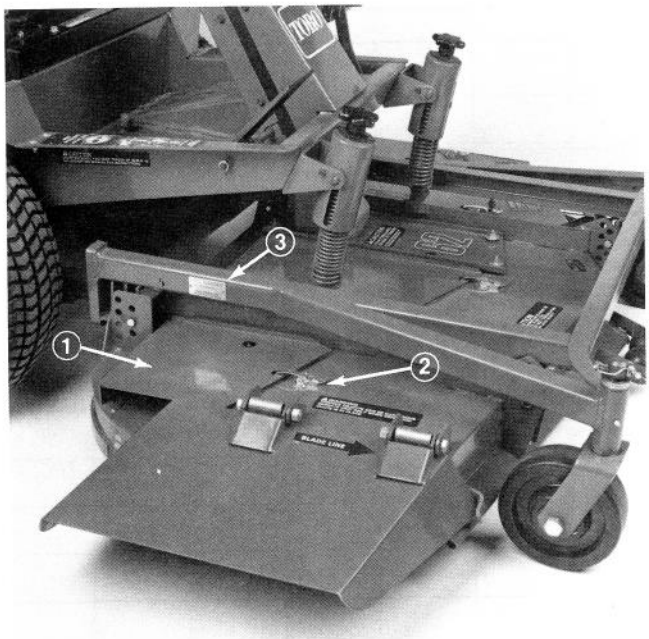

Figure 28

1. Right cover
2. Latch
3. Identification plate

3. Unhook latches securing center and left covers to top of cutting unit. Remove covers. (Fig. 26).

4. Loosen two nuts securing idler plate in place (Fig. 27) and remove old belt from pulleys.

5. To install new belt, the gear box base must be removed. To do this, remove four carriage bolts, and locknuts holding gear box base (Fig. 29).

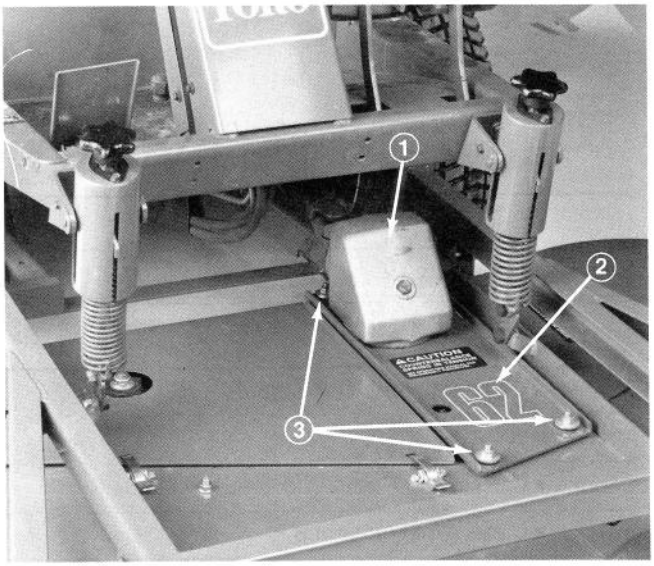

Figure 29

1. Gear box
2. Gear box base
3. Carriage bolts, washers, nuts, rubber cushions (4)

6. Install new belt around gear box pulley, spindle pulleys, stationary idler pulley and adjustable idler pulley (Fig. 30).

7. Install gear box base with carriage bolts and locknuts (Fig. 29).

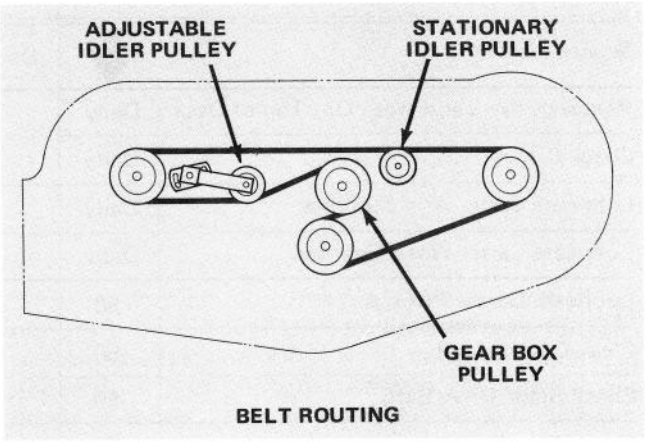

Figure 30

8. Using a torque wrench, adjust tension of idler pulley against the belt: refer to Adjusting Idler Pulley, page 15.

9. Reinstall center, right and left covers and latch.

IDENTIFICATION AND ORDERING

MODEL AND SERIAL NUMBERS

The cutting unit has two identification numbers: a model number and a serial number. These numbers are stamped into a plate. The cutting unit identification plate is located on the frame, behind the right caster wheel (Fig. 28). In any correspondence concerning the cutting unit, supply the model and serial numbers to assure correct information and replacement parts are obtained.

To order replacement parts from an authorized TORO Distributor, supply the following information:

1. Model and serial numbers of the cutting unit.

2. Part number, description and quantity of parts desired.

Note: Do not order by reference number if a parts catalog is being used; use the part number.

SERVICE INTERVAL CHART

Date									
Hour Meter Reading									
Service Interval ↓		Daily	10	50	100	150	200	250	300
Remove Covers and Wash Out Top of Deck	Daily								
Check Blades	Daily								
Lubricate Caster Arm Bushings	Daily								
Lubricate Caster Wheel Bearings	Daily								
Lubricate Grease Fittings	50								
Clean Cutting Unit	50								
Check Blade Drive Belts	50								
Check Gear Box Oil	50								
Change Gear Box Oil	500								

Date									
Hour Meter Reading									
Service Interval ↓		Daily	10	50	100	150	200	250	300
Remove Covers and Wash Out Top of Deck	Daily								
Check Blades	Daily								
Lubricate Caster Arm Bushings	Daily								
Lubricate Caster Wheel Bearings	Daily								
Lubricate Grease Fittings	50								
Clean Cutting Unit	50								
Check Blade Drive Belts	50								
Check Gear Box Oil	50								
Change Gear Box Oil	500								

SERVICE INTERVAL CHART

Date									
Hour Meter Reading									
Service Interval ↓		Daily	10	50	100	150	200	250	300
Remove Covers and Wash Out Top of Deck	Daily								
Check Blades	Daily								
Lubricate Caster Arm Bushings	Daily								
Lubricate Caster Wheel Bearings	Daily								
Lubricate Grease Fittings	50								
Clean Cutting Unit	50								
Check Blade Drive Belts	50								
Check Gear Box Oil	50								
Change Gear Box Oil	500								

Date									
Hour Meter Reading									
Service Interval ↓		Daily	10	50	100	150	200	250	300
Remove Covers and Wash Out Top of Deck	Daily								
Check Blades	Daily								
Lubricate Caster Arm Bushings	Daily								
Lubricate Caster Wheel Bearings	Daily								
Lubricate Grease Fittings	50								
Clean Cutting Unit	50								
Check Blade Drive Belts	50								
Check Gear Box Oil	50								
Change Gear Box Oil	500								

Date									
Hour Meter Reading									
Service Interval ↓		Daily	10	50	100	150	200	250	300
Remove Covers and Wash Out Top of Deck	Daily								
Check Blades	Daily								
Lubricate Caster Arm Bushings	Daily								
Lubricate Caster Wheel Bearings	Daily								
Lubricate Grease Fittings	50								
Clean Cutting Unit	50								
Check Blade Drive Belts	50								
Check Gear Box Oil	50								
Change Gear Box Oil	500								

The Toro Promise

A ONE YEAR LIMITED WARRANTY

The Toro Company promises to repair your TORO Product if defective in materials or workmanship. The following time periods from the date of purchase apply:

Commercial Products . . . . . 1 Year

The costs of parts and labor are included, but the customer pays the transportation costs on walk rotary mowers with cutting unit widths of less than 25".

If you feel your TORO product is defective and wish to rely on The Toro Promise, the following procedure is recommended:

1. Contact your Authorized TORO Distributor or Commercial Dealer (the Yellow Pages of your telephone directory is a good reference source).
2. The TORO Distributor or Commercial Dealer will advise you on the arrangements that can be made to inspect and repair your product.
3. The TORO Distributor or Commercial Dealer will inspect the product and advise you whether the product is defective and, if so, make all repairs necessary to correct the defect without an extra charge to you.

If for any reason you are dissatisfied with the distributor's analysis of the defect or the service performed, you may contact us.

Write:

TORO Commercial Products Service Department
8111 Lyndale Avenue South
Minneapolis, Minnesota 55420

The above remedy of product defects through repair by an Authorized TORO Distributor or Commercial Dealer is the purchaser's sole remedy for any defect.

THERE IS NO OTHER EXPRESS WARRANTY. ALL IMPLIED WARRANTIES OF MERCHANTABILITY AND FITNESS FOR USE ARE LIMITED TO THE DURATION OF THE EXPRESS WARRANTY.

Some states do not allow limitations on how long an implied warranty lasts, so the above limitation may not apply to you.

This Warranty applies only to parts or components which are defective and does not cover repairs necessary due to normal wear, misuse, accidents, or lack of proper maintenance. Regular, routine maintenance of the unit to keep it in proper condition is the responsibility of the owner.

All warranty repairs reimbursable under the Toro Promise must be performed by an Authorized TORO Commercial Dealer or Distributor using Toro approved replacement parts.

Repairs or attempted repairs by anyone other than an Authorized TORO Distributor or Commercial Dealer are not reimbursable under the Toro Promise. In addition, these unauthorized repair attempts may result in additional malfunctions, the correction of which is not covered by warranty.

THE TORO COMPANY IS NOT LIABLE FOR INDIRECT, INCIDENTAL OR CONSEQUENTIAL DAMAGES IN CONNECTION WITH THE USE OF THE PRODUCT INCLUDING ANY COST OR EXPENSE OF PROVIDING SUBSTITUTE EQUIPMENT OR SERVICE DURING PERIODS OF MALFUNCTION OR NON-USE.

Some states do not allow the exclusion or limitation of incidental or consequential damages, so the above limitation or exclusion may not apply to you.

This warranty gives you specific legal rights, and you may also have other rights which vary from state to state.

COUNTRIES OTHER THAN THE UNITED STATES OR CANADA

Customers who have purchased TORO products exported from the United States or Canada should contact their TORO Distributor (Dealer) to obtain guarantee policies for your country, province or state. If for any reason you are dissatisfied with your Distributor's service or have difficulty obtaining guarantee information, contact the TORO importer. If all other remedies fail, you may contact us at The Toro Company.

Compliance with Radio Interference Regulations Certified.
Certifie Conforme au Reglement sur le Brouillage Radioelectrique.

Litho in U.S.A.