FORM NO. 3313-572

TORO®

MODEL: 30575 — 90001 & UP

OPERATOR'S MANUAL

72" SIDE DISCHARGE CUTTING UNIT

TORO®
THIS UNIT CONFORMS TO ANSI B71.4 - 1984

To assure maximum safety, optimum performance, and to gain knowledge of the product, it is essential that you or any other operator of the mower read and understand the contents of this manual before the engine is ever started. Pay particular attention to the SAFETY INSTRUCTIONS highlighted by this symbol —

The safety alert symbol means CAUTION, WARNING or DANGER — personal safety instruction. Failure to comply with the instruction may result in personal injury.



FOREWORD

The cutting unit has advanced concepts in engineering, design and safety; and if maintained properly, will give excellent service.

Since it is a high-quality product, Toro is concerned about the future use of the machine and safety of the user. Therefore, read this manual to familiarize yourself with proper set-up, operation and maintenance instructions. The major sections of the manual are:

1. Safety Instructions
2. Set-up Instructions
3. Before Operating
4. Lubrication
5. Maintenance

Certain information in this manual is emphasized. DANGER, WARNING and CAUTION identify personal safety-related information. IMPORTANT identifies mechanical information demanding special attention. Be sure to read this directive because it deals with the possibility of damaging a part of the machine. NOTE identifies general information worthy of special attention.

TABLE OF CONTENTS

	Page
SAFETY INSTRUCTIONS	2-4
SAFETY AND INSTRUCTION DECALS	4
SPECIFICATIONS	5
LOOSE PARTS	5
SET-UP INSTRUCTIONS	6-8
Install Universal Joint	6
Install Cutting Unit Suspension Frame	6
Install Cutting Unit	7
Mount Rear Weights	7
BEFORE OPERATING	8
Adjusting Height-of-Cut	8
Adjusting Skid	8
OPERATING INSTRUCTIONS	9
Grass Deflector	9
Weight Transfer Adjustment	9
LUBRICATION MAINTENANCE	10
CUTTING UNIT MAINTENANCE	11-25
Troubleshooting	11
Separating Cutting Unit From Traction Unit	12
PTO Shaft Removal	12
Servicing Bushings in Castor Arms	12
Servicing Castor Wheel and Bearing	13
Checking for Bent Blade	13
Replacing Cutter Blade	14
Checking Sail and Sharpening Cutter Blade	14
Correcting Cutting Unit Mismatch	15
Replacing Grass Deflector	16
Adjusting Idler Pulley	17
Adjusting Cover Latches	17
Replacing Drive Belt	17
Replacing Idler Pulley and Arm	18
Replacing Idler Plate	19
Replacing Spindle Pulley	19
Removing Gear Box and Pulley Assembly	20
Replacing Pulley Assembly	20
Gear Box Assembly Servicing	21
Input and Output Shaft Removal	21
Assembly of Input and Output Shaft Assemblies	21
Assembling Input and Output Shaft Assemblies to Gear Box	22
Removing Spindle and Bearings from Spindle Housing	23
Installing Spindle, Bearings and Seals Into Spindle Housing	24
IDENTIFICATION AND ORDERING	25
SERVICE INTERVAL CHART	26-27
THE TORO PROMISE	28

SAFETY INSTRUCTIONS



This safety alert symbol means CAUTION, WARNING or DANGER — "personal safety instruction". Read and understand the instruction because it has to do with safety. Failure to comply with the instruction may result in personal injury.

The cutting unit has been tested and verified for compliance with the B71.4 — 1984 specifications of the American National Standards Institute. However, improper use or maintenance by the owner or operator of the machine can result in injury. To reduce the potential for injury, follow these safety instructions.

BEFORE OPERATING

1. Read and understand the contents of this Operator's Manual before operating the machine. Become familiar with all controls and know how to stop quickly. A replacement manual is available by sending complete Model and Serial Number to:

The Toro Company
8111 Lyndale Avenue South
Minneapolis, Minnesota 55420

COPYRIGHT © ALL RIGHTS RESERVED
The Toro Company — 1988
MINNEAPOLIS, MN 55420 – U.S.A.

SAFETY INSTRUCTIONS

2. Do not allow children to operate the machine. Do not allow adults to operate the machine without proper instruction.

3. Remove all debris or other objects that might be picked up and thrown by the cutter blades. Keep all bystanders away from the mowing area.

4. Keep all shields and safety devices in place. If a shield, safety device or decal is illegible, malfunctioning or damaged, repair or replace it before operation is commenced. Also tighten any loose nuts, bolts and screws to assure machine is in safe operating condition.

5. Do not operate machine while wearing sandals, tennis shoes, sneakers or shorts. Also, do not wear loose fitting clothing which could get caught in moving parts. Always wear long pants and substantial shoes. Wearing safety glasses, safety shoes and a helmet is advisable and required by some local ordinances and insurance regulations.

6. Make sure interlock switches are adjusted correctly so engine cannot be started unless traction pedal is released – neutral position – and PTO lever is in DISENGAGE position.

7. Fill fuel tank before starting the engine. Avoid spilling fuel. Since fuel is flammable, handle it carefully.

A. Use an approved fuel container.

B. Do not fill tank while engine is hot or running.

C. Do not smoke while handling fuel.

D. Fill fuel tank outdoors and up to about one inch (25 mm) from top of the tank, not the filler neck.

E. Wipe up any spilled fuel.

WHILE OPERATING

8. Do not run the engine in a confined area without adequate ventilation. Exhaust fumes are hazardous and could possibly be deadly.

9. Maximum seating capacity is one person. Never carry passengers.

10. Sit on the seat when starting the engine and operating the machine.

11. Before starting the engine:

A. Engage parking brake.

B. Ensure traction pedal is in neutral and PTO is in OFF, disengage position.

C. After engine is started, release parking brake and keep foot off traction pedal. Machine must not move. If movement is evident, the neutral return mechanism is adjusted incorrectly; therefore, shut engine off and adjust until machine does not move when traction pedal is released.

12. Using the machine demands attention, and to prevent loss of control:

A. Mow only in daylight or when there is good artificial light.

B. Watch for holes or other hidden hazards.

C. Do not drive close to a sand trap, ditch, creek or other hazard.

D. Reduce speed when making sharp turns and when turning on hillsides.

E. Avoid sudden stops and starts.

F. Before backing up, look to the rear and be sure no one is behind the machine.

G. Watch for traffic when near or crossing roads. Always yield the right-of-way.

13. The grass deflector must always be installed and in down position on the side discharge cutting unit. If the cutting unit discharge area ever plugs, disengage PTO and shut engine off before removing the obstruction.

14. Never raise the cutting unit while the blades are rotating.

15. If the cutting blades strike a solid object or the machine vibrates abnormally, disengage PTO, move throttle to SLOW, set parking brake and shut engine off. Remove key from switch to prevent possibility of accidental starting. Check cutting unit and traction unit for damage and malfunctioning parts. Repair any damage before restarting the engine and operating the cutting unit. Be sure blades are in good condition and blade bolts are tight.

16. Cut grass slopes carefully. Do not start, stop, or turn suddenly.

17. Do not touch engine or muffler while engine is running or soon after it is stopped. These areas could be hot enough to cause a burn.

18. Before getting off the seat:

A. Move traction pedal to neutral position and remove foot from pedal.

B. Disengage the PTO and set the parking brake.

C. Shut the engine off and remove key from ignition switch. Wait for all movement to stop before getting off the seat.

SAFETY INSTRUCTIONS

19. Lower the cutting unit to the ground and remove key from ignition switch whenever machine is left unattended.

MAINTENANCE

20. Remove key from ignition switch and disconnect high tension wires from spark plugs to prevent accidental starting of the engine when servicing, adjusting or storing the machine.

21. Perform only those maintenance instructions described in this manual. If major repairs are ever needed or assistance is desired, contact an Authorized Toro Distributor.

22. To reduce potential fire hazard, keep the engine free of excessive grease, grass, leaves and accumulations of dirt.

23. Be sure machine is in safe operating condition by keeping nuts, bolts and screws tight. Check the blade mounting bolts frequently to be sure they are tight (85 to 110 ft-lb).

24. Make sure all hydraulic line connectors are tight, and all hydraulic hoses and lines are in good condition before applying pressure to the system.

25. Keep body and hands away from pin hole leaks or nozzles that eject hydraulic fluid under high pressure. Use paper or cardboard, not hands, to search for leaks. Hydraulic fluid escaping under pressure can have sufficient force to penetrate skin and do serious damage. If fluid is injected into the skin it must be surgically removed within a few hours by a doctor familiar with this form of injury or gangrene may result.

26. Before disconnecting or performing any work on the hydraulic system, all pressure in the system must be relieved by stopping engine and lowering implement to the ground.

27. If the engine must be running to perform a maintenance adjustment, keep hands, feet, clothing and other parts of the body away from the cutting unit blades and other moving parts.

28. Do not overspeed the engine by changing governor settings. To be sure of safety and accuracy, have an Authorized TORO Distributor check maximum engine speed with a tachometer.

29. Engine must be shut off before checking oil or adding oil to the crankcase.

30. At the time of manufacture the cutting unit conformed to safety standards in effect for riding mowers. Therefore, to ensure optimum performance and safety, always purchase genuine TORO replacement parts and accessories. NEVER USE "WILL-FIT" REPLACEMENT PARTS AND ACCESSORIES MADE BY OTHER MANUFACTURERS. Using unapproved replacement parts and accessories could void the warranty of The Toro Company.



SAFETY AND INSTRUCTION DECALS

The following decals are installed on the machine. If any become damaged or illegible, replace it. The decal part number is listed in your parts catalog. Replacement can be ordered from your Authorized Toro Distributor.



ON LEFT SIDE OF CUTTING UNIT
(Part No. 68-7270)



UNDER DEFLECTOR
(Part No. 66-6380)

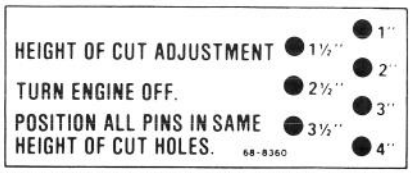

ON LEFT SIDE OF CARRIER FRAME
(Part No. 68-8360)



ON LEFT SIDE
OF CUTTING UNIT
AND DEFLECTOR
(Part No. 43-8480)



ON LEFT SIDE OF CUTTING UNIT
(Part No. 68-8340)



ON LEFT, CENTER AND RIGHT
SIDES OF DECK, UNDER COVERS
(Part No. 67-5360)



ON RIGHT AND LEFT OF CUTTING UNIT
(Part No. 66-1340)

SPECIFICATIONS

CUTTING UNIT:

Width of Cut: 71-5/8 in. (1.82 m).

Height-of-Cut: Adjustable from 1" to 4" (25 to 102 mm) in 1/2" (13 mm) increments.

Blade Tip Speed: 16,270 ft/min. (82.65 m/sec.) @ 3250 engine RPM.

Cutter Blades: Three heat treated steel blades, each 3/16 in. (4.8 mm) thick and 24.75 in. (546 mm) long.

Castor Wheels: 8 in. (203 mm) dia. with greaseable roller bearings.

Unit Drive System: PTO driven gear box transmits power through a "AA" section belt to all blade spindles.

Optional Equipment:

Phenolic Castor Wheel Assembly: Part No. 27-1050, use with spanner, 68-8980.

Leaf Mulcher: Model 30779.

Leaf Mulcher Discharge Plate: Part No. 57-0700.

LOOSE PARTS

DESCRIPTION	QTY.	USE
Lift Arms	2	Mount to traction unit.
Capscrews — 1/2-13 x 1-1/2" Carrier Frame	6 1	Mount to lift arms.
Castor Wheel Assembly Thrust Washer Lynch Pin	2 8 2	Install in frame. Install on castor fork shafts. Install on top hole of castor shafts.
Clevis Pin Hair Pin Cotter	4 4	Mount deck to suspension frame.
Cushion Shim	3	Used to shim rubber cushions for leveling of cutting deck.
Operator's Manual Commercial Products setup card Registration Card	1 1 1	

Note: The following parts are also required for mounting a Model 30575 (72") Cutting Unit.

Part No.	Description	Qty.
24-5780	Rear Weight Kit	1

Order parts from your Authorized Toro Distributor.

Note: One of the following Weight Transfer Kits are required for mounting a Model 30575 (72") Cutting Unit:

Kit Model	For Use On
*30704	Deluxe Kit for GM 220D or GM 224
*30714	Standard Kit for GM 220D or GM 224

*May also be used on GM 220 with adapter bar, part no. 66-8210.

SET-UP INSTRUCTIONS

DANGER

Do not start the engine and engage the PTO lever when PTO shaft is not connected to cutting unit gear box because the PTO shaft will rotate with enough force to cause serious injury.

INSTALL CUTTING UNIT SUSPENSION FRAME

Note: Grease castor wheel shaft with No. 2 grease after installing and after initial operation of machine.

1. Remove Lynch Pins and two thrust washers shipped on each castor wheel assembly. Leave two thrust washers on each shaft, insert shafts into frame, install thrust washers and Lynch pins (Fig. 1).

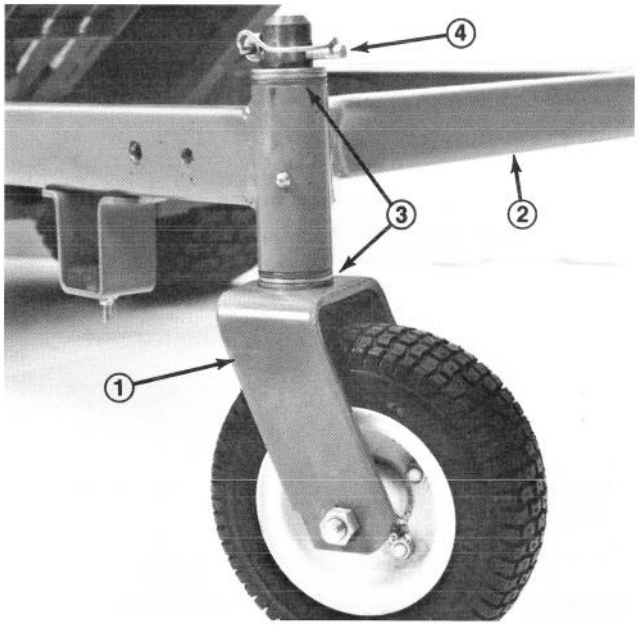

Figure 1

1. Castor wheel assembly
2. Frame
3. Thrust washers
4. Lynch pin

2. Slide lift arms under each side of traction unit. Align lift arm holes with axle bracket holes, insert pivot pins (provided with traction unit) and secure with capscrews, flatwashers, lockwashers and cotter pins (Fig. 2).

3. Align lift arm holes with hydraulic cylinder rod holes, insert pins and secure with cotter pins (Fig. 2).

4. Remove cotter pins from clevis pins holding brake struts and yokes together, and discard the cotter pins. Keeping clevis pin in place, install short end of spring into hole in clevis pin to retain parts together. Connect other end of springs to slotted holes in lift arms (Fig. 3).

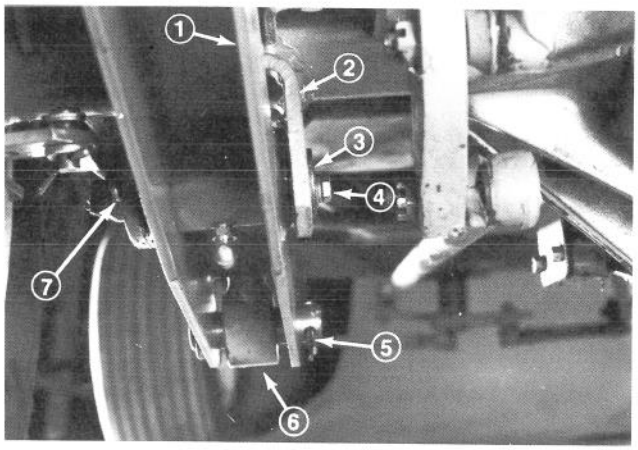

Figure 2

1. Lift arm
2. Axle bracket
3. Pivot pin
4. Capscrew
5. Cylinder pin
6. Cylinder end
7. Cotter pin

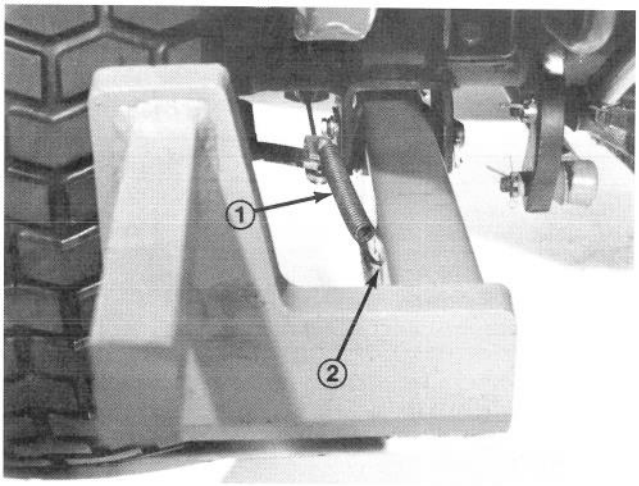

Figure 3

1. Brake return spring
2. Slotted hole

5. Slide carrier frame onto lift arms aligning mounting holes. Secure each side of carrier frame to lift arms with (3) 1/2 - 13 x 1-1/2" lg. capscrews. Torque capscrews to 70-80 ft-lb (Fig. 4).

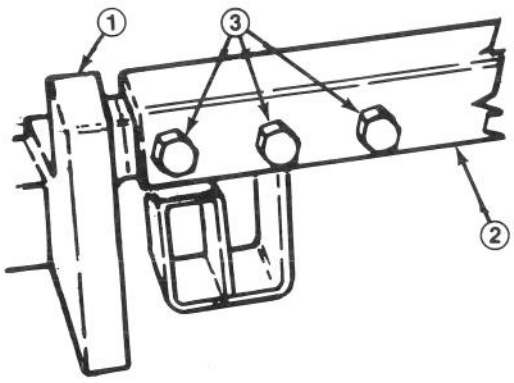

Figure 4

1. Lift arm
2. Carrier frame
3. Mounting capscrews

SET-UP INSTRUCTIONS

INSTALL CUTTING UNIT

1. Make sure PTO shaft on traction unit clears cutting unit frame, engage parking brake, be sure traction pedal is in neutral, PTO lever is in OFF position, start engine and raise frame.

2. Stop engine, slide cutting unit under frame, slide male PTO shaft into female PTO shaft. Align gearcase input shaft with PTO shaft and slide together. Secure with roll pin (Fig. 5).

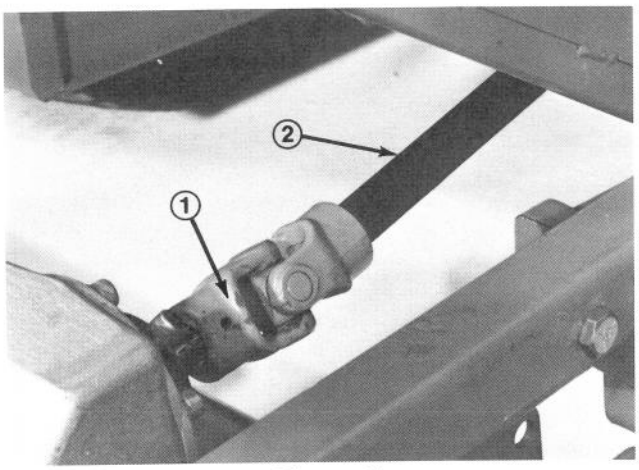

Figure 5

1. Roll pin 2. PTO shaft

Note: On Groundsmaster 220-D (Diesel) or GM 224 also tighten bolts and locknuts (Fig. 6).

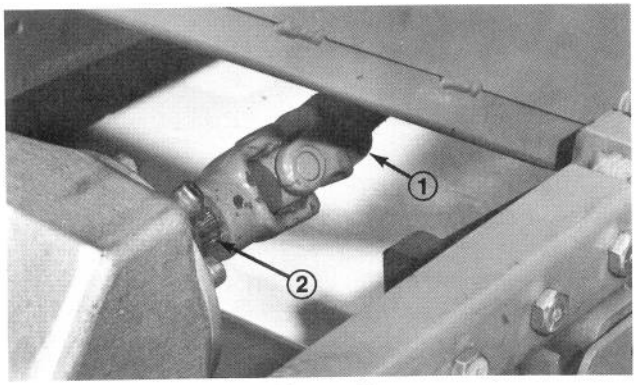

Figure 6

1. PTO shaft 2. Bolts and locknuts

3. Install clevis pins through desired height-of-cut bracket holes and frame to secure cutting unit to frame (Fig. 8). Secure all four pins with hairpins.

Note: Install weight transfer kit or counterbalance kit to cutting unit and traction unit at this time per instructions included with kit.

4. Grease all lubricating fittings and check level of oil in gearcase; refer to Lubrication Maintenance, page 10.

MOUNT REAR WEIGHTS

CAUTION

To insure proper handling and safety characteristics, (2) 35 lb rear weights must be attached to Groundsmaster traction units.

1. Mount rear weights to back of machine with two capscrews, lockwashers, spacers, and nuts (Fig. 7). Spacer must be between weight and chassis. Order parts from your Authorized Toro Distributor.

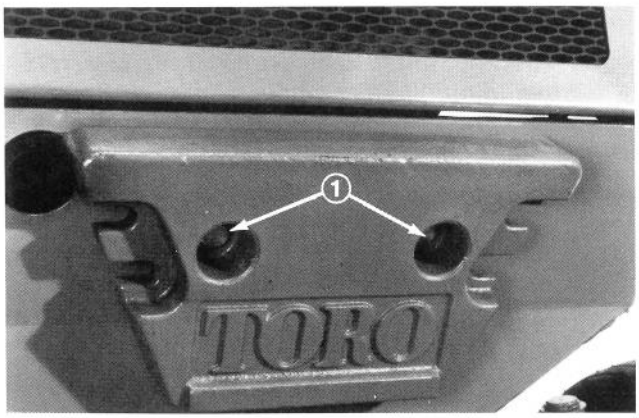

Figure 7

1. Capscrews, lock washers, spacers and nuts

BEFORE OPERATING

ADJUSTING HEIGHT-OF-CUT

The height-of-cut is adjustable from 1 to 4 inches (25 to 102 mm) in 1/2 inch (13 mm) increments by relocating four clevis pins in different hole locations in brackets at each corner of the cutting unit (Fig. 8).

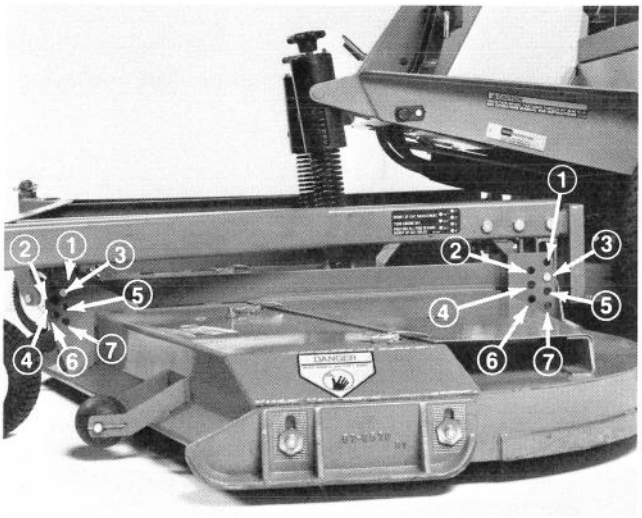

Figure 8

1. 1 in. (25 mm)
2. 1-1/2 in. (38 mm)
3. 2 in. (51 mm)
4. 2-1/2 in. (64 mm)
5. 3 in. (76 mm)
6. 3-1/2 in. (89 mm)
7. 4 in. (102 mm)
8. Skid
9. Flange nuts (2)

Note: All four pins should be in identical hole locations for proper operation.

Note: If cutting unit is to be used in 1 in. (25 mm) or 1-1/2 in. (38 mm) height-of-cut setting, rear cutting unit rollers must be positioned in the appropriate bracket holes (Fig. 9 & 10).

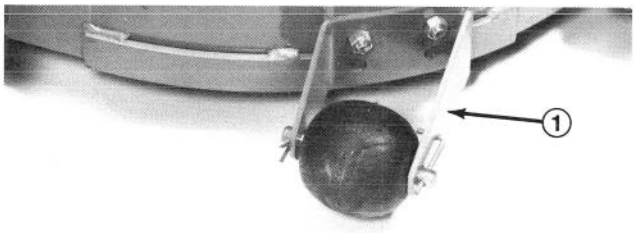

Figure 9

1. Rear cutting unit roller

1. Remove nuts securing rear rollers to outside of cutting unit (Fig. 9).

2. Position roller bracket in bottom mounting holes and reinstall nuts.

Note: Make sure L-shaped pin is inserted into roller shaft and hole in mounting bracket.

3. Remove cotter pins securing roller shafts to underside of deck (Fig. 10).

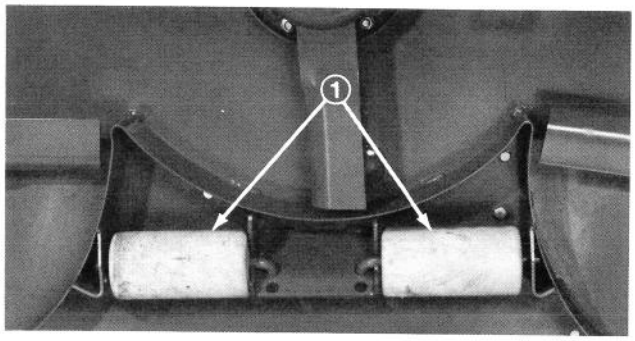

Figure 10

1. Rear cutting unit rollers

4. Slide shafts out of lower bracket holes, align rollers with top holes and install shafts.

5. Install cotter pins to secure assemblies.

ADJUSTING SKID

1. After initial set up or if height-of-cut is changed, deck skid should also be adjusted.

1" H.O.C. — Skid all the way up
1-1/2" - 2" H.O.C. — Skid 1/4-3/8" off ground
2-1/2" and higher H.O.C. — Skid all the way down

2. Adjust skid by loosening flangenuts, positioning skid as desired, and retightening flangenuts (Fig. 8).

OPERATING INSTRUCTIONS

GRASS DEFLECTOR

WARNING

The grass deflector (Fig. 11) is a safety device that diverts grass and other foreign objects being discharged downwardly. WE STRONGLY RECOMMEND THAT THE DEFLECTOR BE IN ITS NORMAL OPERATING POSITION WHENEVER THE CUTTING UNIT IS ENGAGED. NEVER OPERATE CUTTING UNIT WITH THE DEFLECTOR REMOVED FROM THE CUTTING UNIT OR TIED/BLOCKED IN A RAISED POSITION. SINCE THE BLADES COULD THEN THROW DEBRIS A CONSIDERABLE DISTANCE WITH SUFFICIENT FORCE TO CAUSE PERSONAL INJURY OR DAMAGE TO PROPERTY. If the grass deflector is damaged, repair or replace the affected part(s).

NOTE: The deflector is spring loaded into its downward normal operating position, but the operator can temporarily swing it out of the way to facilitate loading in a trailer or when otherwise necessary.

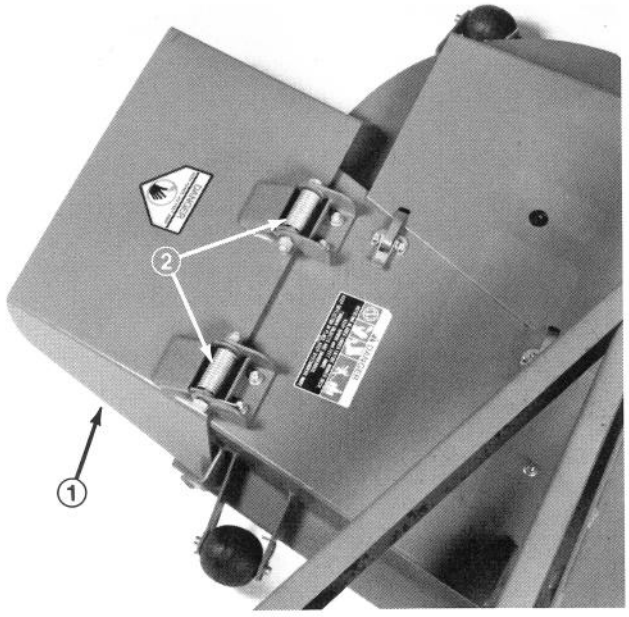

Figure 11

1. Grass deflector 2. Springs

WEIGHT TRANSFER ADJUSTMENT

The cutting unit performs best when the spring tension of the counter balance kit or weight transfer kit is adjusted so that the cutting unit does not ride too heavily on flat turf while not bounding excessively in uneven conditions. If the cutting unit scalps the turf and/or gives an uneven cut from one side to the other, there is too much weight on the deck and weight needs to be transferred to the traction unit (i.e., adjust the springs up).

If, on the other hand, too much weight is transferred to the traction unit, the deck will flop around and give an uneven cut. Refer to installation instructions included with kit to adjust spring tension.

If the cutting unit does not perform properly, set the parking brake, raise the cutting unit into the transport position and stop the engine. Readjust the weight transfer tension and resume cutting.

CAUTION

Counterbalance spring(s) are in tension when deck is in lowered position. Always raise deck before adjusting or removing spring(s).

LUBRICATION MAINTENANCE

GREASE BEARINGS, BUSHINGS AND GEAR BOX

The cutting unit must be lubricated regularly. If machine is operated under normal conditions, lubricate castor bearings and bushings with No. 2 general purpose lithium grease or molybdenum base grease, after every 8 hours of operation or daily, whichever comes first. All other bearings, bushings and the gear box must be lubricated after every 50 hours of operation.

1. The cutting unit lubrication points are: castor spindle bushings (Fig. 12); castor wheel bearings (Fig. 12); blade spindle bearings (Fig. 13) and cutting unit frame pivot bushings (Fig. 15).

2. Lower cutting unit so castor wheels are on a level surface. Be sure all height-of-cut pins are in the same hole locations. Remove filler plug (Fig. 14) from gear box and check level of lubricant. If level of lubricant is low, add SAE 10W-40 or 10W-30 SF engine oil until level is up to bottom of filler hole. Wipe any metal particles off filler plug and install filler plug.

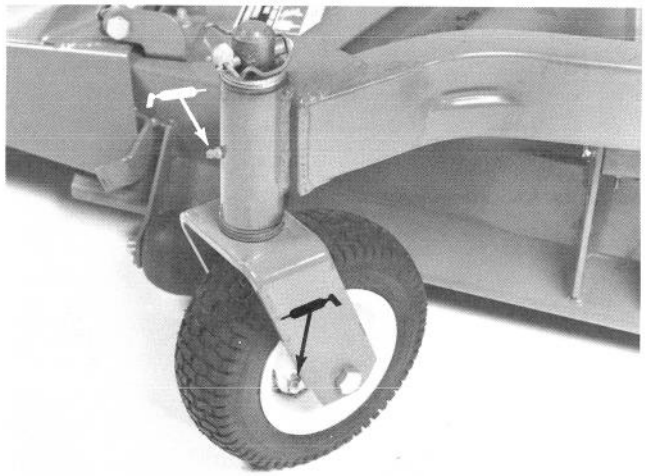

Figure 12

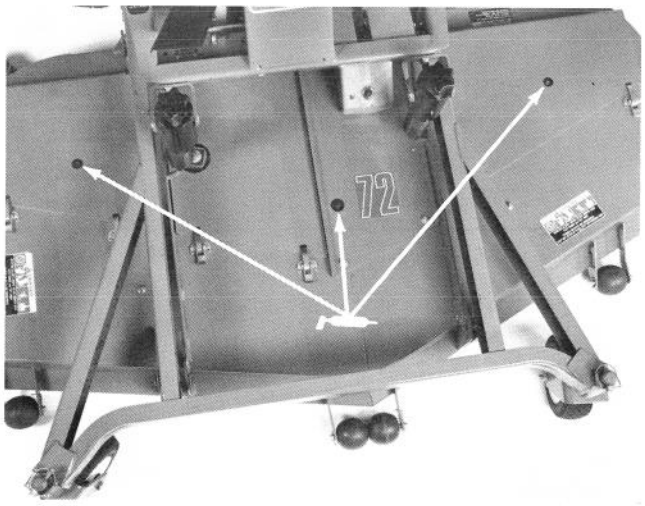

Figure 13

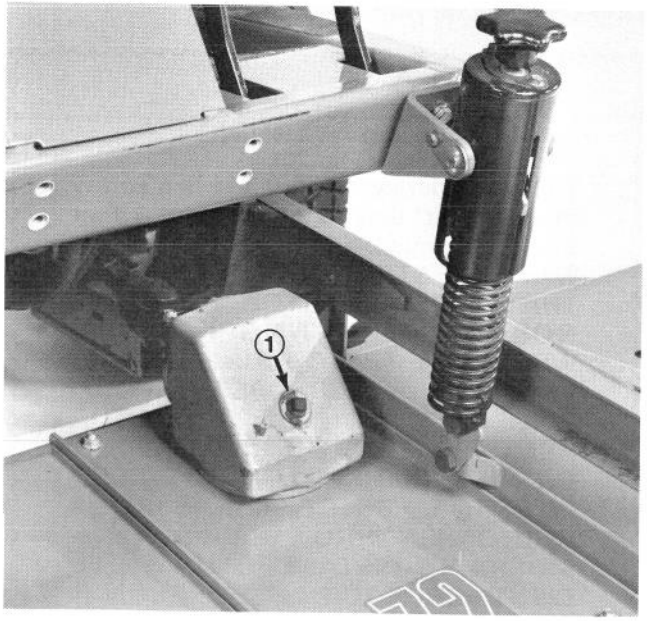

Figure 14

1. Filler plug

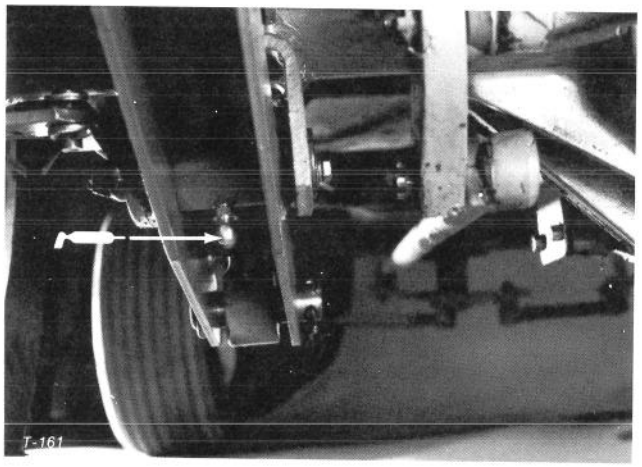

Figure 15

CUTTING UNIT MAINTENANCE TROUBLESHOOTING

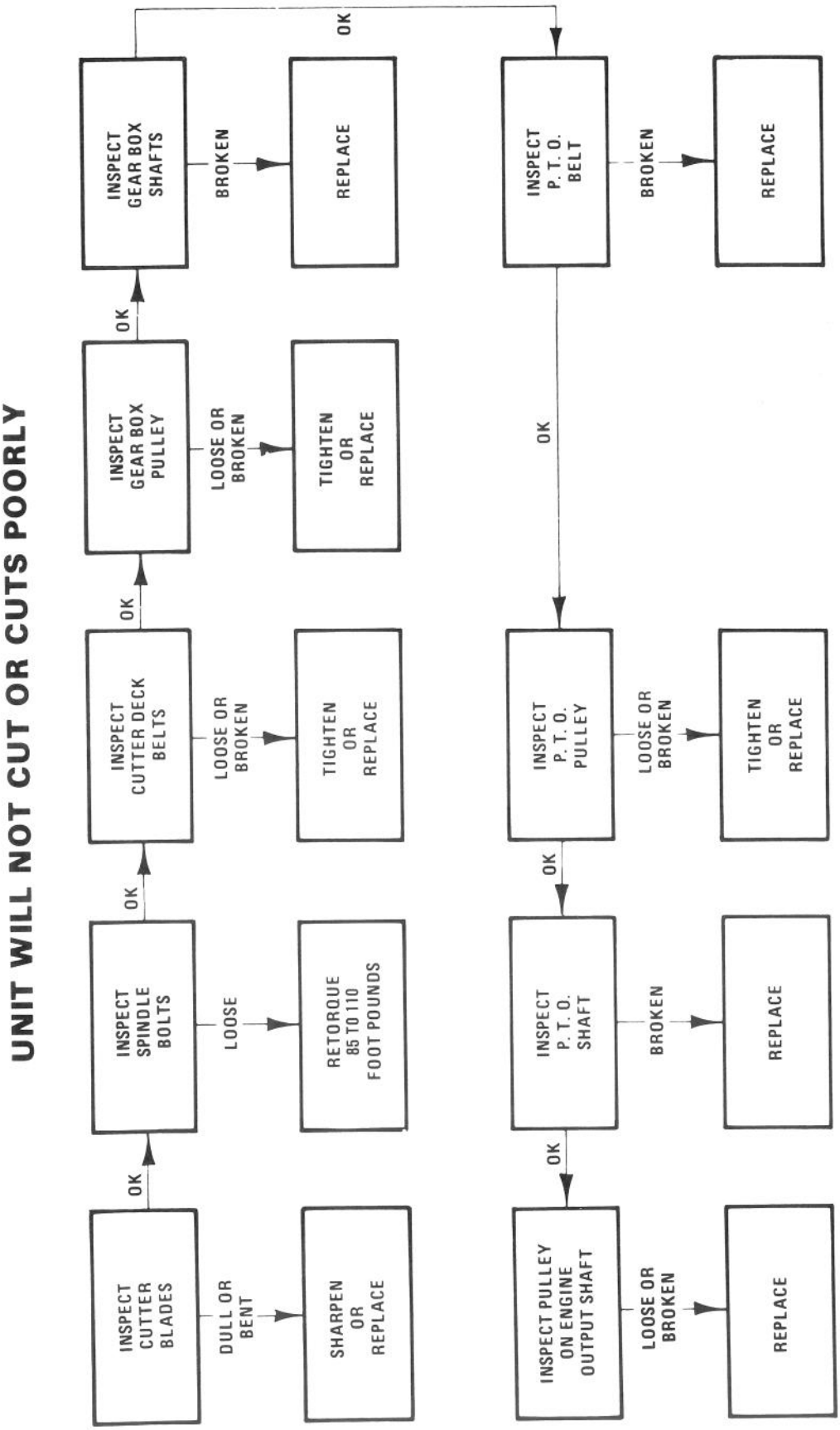

CUTTING UNIT MAINTENANCE

SEPARATING CUTTING UNIT FROM TRACTION UNIT

1. Position machine on level surface, raise cutting unit, engage parking brake, be sure traction pedal is in neutral position, PTO lever is in OFF position, shut engine off and remove key from switch.

CAUTION

Counterbalance springs are in tension when deck is in lowered position. Always raise deck before adjusting or removing springs.

2. Disconnect counterbalance from traction unit, remove lock pins from brackets, separate spring tension assemblies from brackets and lay them down on the deck. Loosely secure lock pins to brackets to prevent losing them. (Fig. 16).

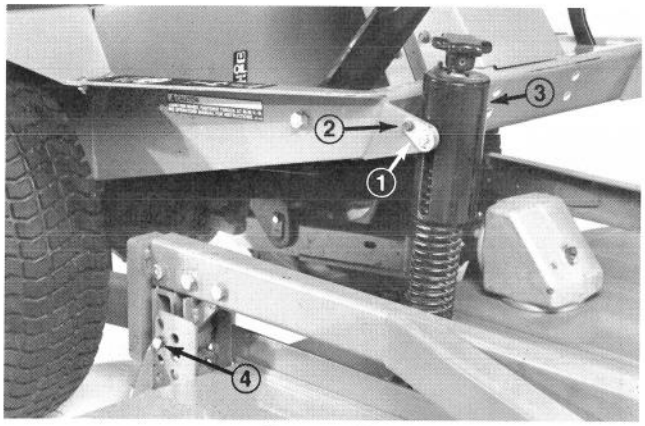

Figure 16

1. Lockpin 3. Spring tension assembly
2. Bracket 4. Height-of-cut clevis pin

3. Lower cutting unit, remove pins (4) from height-of-cut brackets (Fig. 16).

4. Start engine, raise cutting unit frame.

5. Stop engine and slide cutting unit away from traction unit and frame separating male and female section of PTO shaft (Fig. 17).

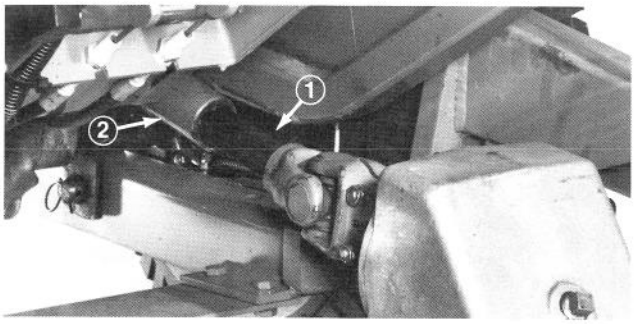

Figure 17

1. Male shaft 2. Female PTO shaft

DANGER

Do not start the engine and engage the PTO lever when PTO shaft is not connected to gear box on cutting unit. If engine is started and PTO shaft is allowed to rotate, serious injury could result.

6. Deck suspension frame must be removed if traction unit will be used with any other accessory.

PTO SHAFT REMOVAL

1. Jack left wheel off shop floor. Support the axle with a jackstand to prevent machine from falling accidentally.

2. Remove five wheel nuts and slide left wheel off axle to expose access hole inside of chassis (Fig. 18).

3. Push PTO lever forward until pulley and brake disengage. Align hole in PTO shaft with hole in chassis (Fig. 18).

4. Through access hole in chassis, drive roll pin out of PTO shaft and output shaft with pin punch and ball peen hammer (Fig. 18).

Note: On Groundsmaster 220-D (Diesel) or GM 224, bolts and locknuts must also be loosened or removed.

5. Install the left wheel with five wheel nuts. Tighten nuts to 60-80 ft-lb (81-109 N·m).

6. Lower machine and remove jack.

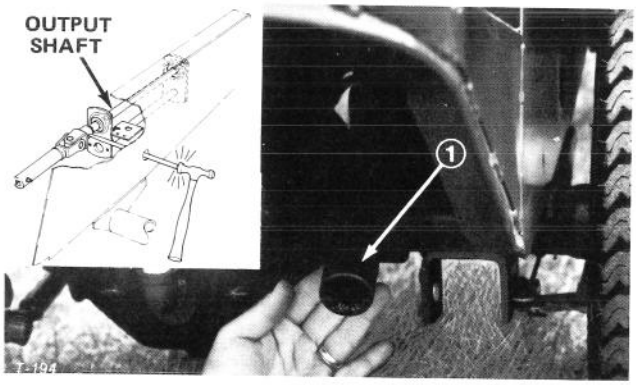

Figure 18

1. PTO shaft

SERVICING BUSHINGS IN CASTOR ARMS

The castor arms have bushings pressed into the top and bottom portion of the tube which, after many hours of operation, will wear. To check the bushings,

CUTTING UNIT MAINTENANCE

move castor fork back and forth and from side-to-side. If castor shaft is loose inside the bushings, bushings are worn and must be replaced.

1. Raise cutting unit and block it so it cannot fall accidentally.

2. Remove lynch pin and thrust washers from top of castor spindle (Fig. 19).

3. Pull castor spindle out of mounting tube. Allow thrust washers to remain on bottom of spindle.

4. Insert pin punch into top or bottom of mounting tube and drive bushing out of tube (Fig. 19). Also drive other bushing out of tube. Clean inside of tubes to remove dirt.

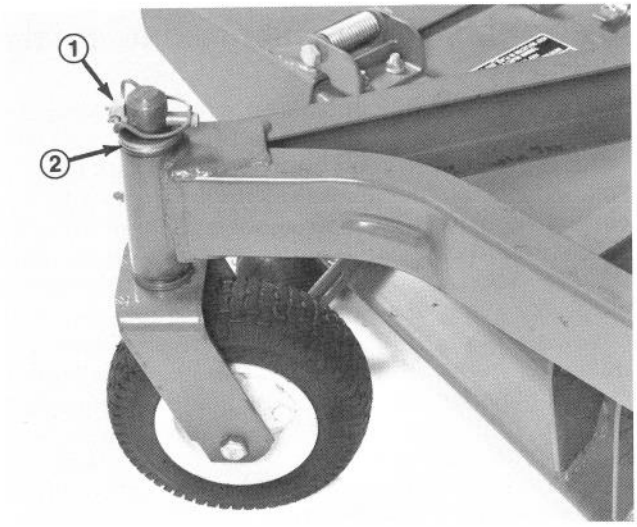

Figure 19

1. Lynch pin 2. Thrust washers

5. Apply grease to inside and outside of new bushings. Using a hammer and flat plate, drive bushings into mounting tube.

6. Inspect castor shaft for wear and replace it if damaged.

7. Push castor spindle through bushings and mounting tube. Slide spacers onto spindle. Install lynch pin through castor spindle to retain all parts in place.

IMPORTANT: When bushings are installed, the inside diameter may collapse slightly, and this may not allow castor spindle to be installed. If castor spindle does not slide through new bushings and mounting tube, ream both bushings to inside diameter of 1.126 inches (28.6 mm).

SERVICING CASTOR WHEEL AND BEARING

The castor wheel rotates on a high-quality roller bearing and is supported by a spanner bushing. Even after many hours of use, provided that the bearing was kept well-lubricated, bearing wear will be minimal. However, failure to keep bearing lubricated will cause rapid wear. A wobbly castor wheel usually indicates a worn bearing or bushing.

1. Remove locknut from capscrew holding castor wheel assembly between castor fork (Fig. 20). Grasp castor wheel and slide capscrew out of fork.

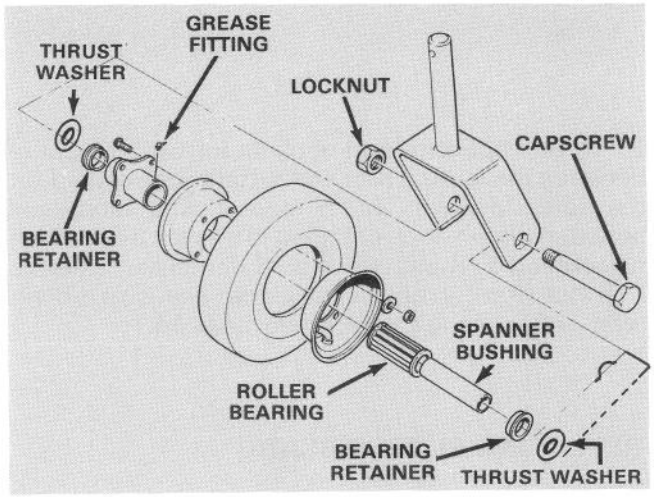

Figure 20

Note: Account for the two thrust washers (Fig. 20).

2 Tip wheel to the side and allow spanner bushing to fall out (Fig. 20).

3. Inspect bearng, spanner bushing and wheel for wear. Replace worn, damaged parts.

4. To reassemble parts, slide spanner bushing through hub assembly.

5. Mount castor wheel assembly and washers between the fork, insert capscrew and locknut. Tighten capscrew and locknut until spanner bushing and washers bottom against inside of castor fork.

6. Pump grease through grease fitting on wheel (Fig. 12) until bearing is greased thoroughly.

CHECKING FOR BENT BLADE

1. Raise cutting unit, engage parking brake, be sure traction pedal is in neutral, PTO lever is in OFF position, stop engine, remove key from switch, and disconnect high tension wires from spark plugs.

CUTTING UNIT MAINTENANCE

Block cutting unit to prevent it from falling accidentally.

2. Rotate blade until the ends face forward and backward (Fig. 21). Measure from inside of cutting unit to cutting edge at front of blade (Fig. 21), and remember this dimension.

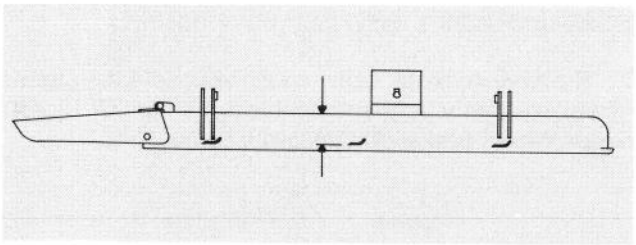

Figure 21

3. Rotate opposite end of blade forward. Measure between the cutting unit and cutting edge of blade at the same position as in step 2. The difference between dimensions obtained in steps 2 and 3 must not exceed 1/8 inch (3 mm). If dimension exceeds 1/8 inch (3 mm), replace the blade because it is bent: refer to Replacing Cutter Blade, page 14.

REPLACING CUTTER BLADE

The blade must be replaced if a solid object is hit, the blade is out-of-balance or if the blade is bent. Always use genuine TORO replacement blades to be sure of safety and optimum performance. Never use replacement blades made by other manufacturers because they could be dangerous.

WARNING

Do not try to straighten a blade that is bent, and never weld a broken or cracked blade. Always use a new blade to assure safety.

1. Raise cutting unit to its highest position. Engage parking brake, be sure traction pedal is in neutral, PTO lever is in OFF position, shut engine off and disconnect high tension wires from spark plugs. Block cutting unit to prevent it from falling accidentally.

2. Grasp end of blade using a rag or thickly padded glove. Remove bladebolt, lockwasher, anti-scalp cup and blade from spindle shaft (Fig. 22).

3. In sequence, install blade — sail facing toward cutting unit — and anti-scalp cup. Secure parts in place with bladebolt and lockwasher. Tighten bladebolt to 85-100 ft-lb.

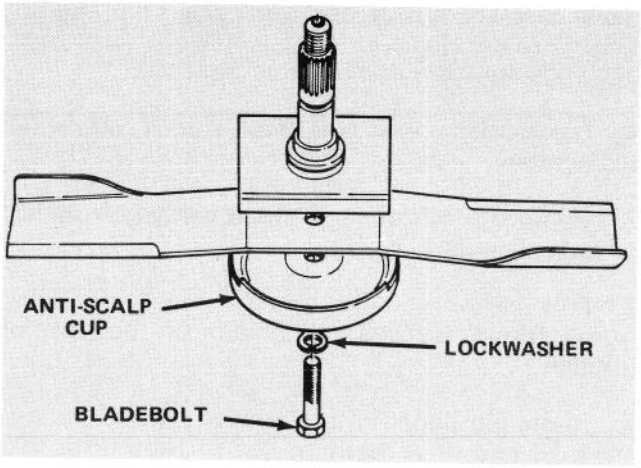

Figure 22

CHECKING SAIL AND SHARPENING CUTTER BLADE

Two areas must be considered when checking and servicing the cutter blade: one area is the sail, the other is the cutting edge. Both cutting edges and the sail, which is the turned up portion opposite the cutting edge, contribute to a good quality-of-cut. The sail is important because it pulls grass up straight, thereby producing an even cut. However, the sail will gradually wear down during operation, and this condition is normal. As the sail wears down, the quality-of-cut will degrade somewhat, even though the cutting edges are sharp. The blade cutting edges must be sharp so the grass is cut rather than torn. A dull cutting edge is evident when tips of the grass appear brown and shredded. Sharpen the cutting edges to correct this condition.

1. Raise cutting unit to its highest position. Engage parking brake, be sure traction pedal is in neutral, PTO lever is in OFF position, stop engine and remove key from switch. Block cutting unit to prevent it from falling accidentally.

2. Examine cutting ends of the blade carefully, especially where the flat and curved parts of the blade meet (Fig. 23-1). Since sand and abrasive material can wear away the metal that connects the flat and curved parts of the blade, check the blade before using the mower. If wear is noticed (Fig. 23-2), replace the blade.

DANGER

If blade is allowed to wear, a slot will form between the sail and flat part of the blade. (Fig. 23-3). Eventually, a piece of the blade may break off and be thrown from under the housing, possibly resulting in serious injury to yourself or bystanders.

CUTTING UNIT MAINTENANCE

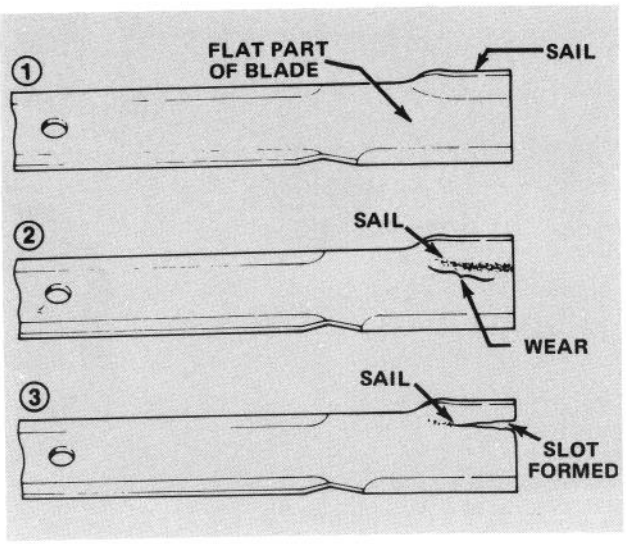

Figure 23

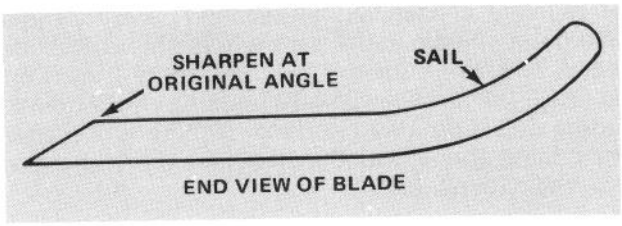

Figure 24

3. Inspect cutting edges of all blades. Sharpen the cutting edges if they are dull or nicked. Sharpen only the top side of the cutting edge and maintain the original cutting angle to make sure of sharpness (Fig. 24). The blade will remain balanced if same amount of metal is removed from both cutting edges.

Note: Remove the blades and sharpen them on a grinder: refer to Removing Cutter Blade, steps 1 and 2, page 14. After sharpening the cutting edges, reinstall blade and anti-scalp cup with bladebolt and lockwasher. Blade sails must be on top of blade. Tighten bladebolt to 85-110 ft-lb.

4. Remove blocking from cutting unit and lower it to the ground.

CORRECTING CUTTING UNIT MISMATCH

If one cutter blade cuts lower than the others, correct as follows:

1. Lower cutting unit onto level surface. Engage parking brake, be sure traction pedal is in neutral and PTO lever is in OFF position. Shut engine off and disconnect high tension wires from spark plugs. Make sure tire pressure is equal in all tires.

2. Raise height-of-cut to 4 in. (102 mm) position (Fig. 27); refer to Adjusting Height-Of-Cut, page 8.

3. Rotate blades so tips line up with one another. Tips of the adjacent blades must be within 1/8 in. (3 mm) of each other. If tips are not within 1/8 in. (3 mm) of each other, proceed to step 10 and add shims between spindle housing and bottom of cutting unit.

4. Check to make sure front height-of-cut pins are resting properly on frame cushions (Fig. 29). If pins are not resting properly, place a shim or shims under cushion to raise it for proper alignment.

5. Position all three blades in the "A" position (Fig. 25) and measure from level surface to the bottom of the tip end of each blade (Fig. 26).

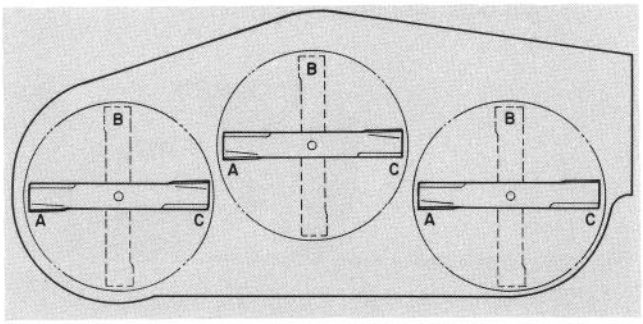

Figure 25

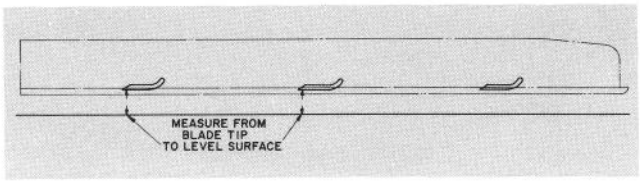

Figure 26

6. Note measurement attained at "A", rotate blades to "B" position (Fig. 25), measure distance of all blades to level surface and note dimensions (Fig. 26).

7. Rotate blades to "C" position, measure and note distance measured (Fig. 25, 26).

8. Compare measurements at various positions. All dimensions must be equal within 1/4 in. (6 mm) from any two adjacent blades. The difference between dimensions from all three blades must not exceed 3/8 inch. If difference exceeds specifications proceed to step 9.

9. Equalize side to side measurements as follows:

   A. Cutting units usually operated at 1 to 2 in. (25 to 51 mm) height-of-cut should have the low side of the cutting unit raised. Remove the lynch pin securing castor wheel on low end (Fig. 28) and remove castor assembly.

   B. Transfer one thrust washer from top side of castor shaft to bottom, install castor assembly and compare blade height of all

blades; refer to steps 3 through 6. Continue adding thrust washers if height still does not meet requirements.

C. If cutting unit is operated at 2 to 4 in. (51 to 102 mm) height-of-cut, lower the high side of cutting unit. Remove lynch pin of castor at high end of unit and remove castor assembly (Fig. 28).

D. Transfer one thrust washer from bottom of castor shaft to top side, install assembly and compare blade height of all blades; refer to steps 2 through 6. Repeat procedure if height still does not meet requirements.

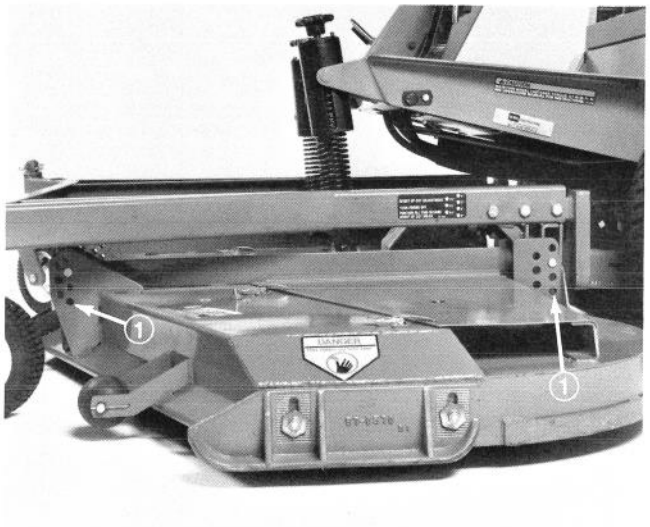

Figure 27

1. Highest height-of-cut setting.

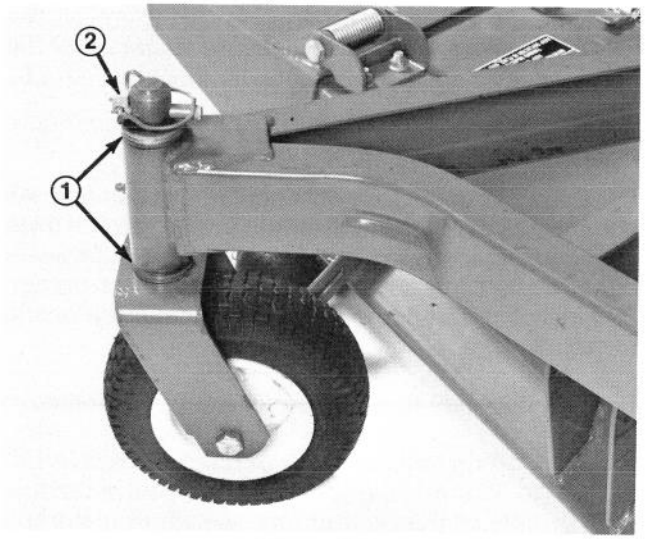

Figure 28

1. Thrust washers (as required) 2. Lynch pin

E. If height is within specified dimension, install lynch pin, and set height-of-cut to proper height.

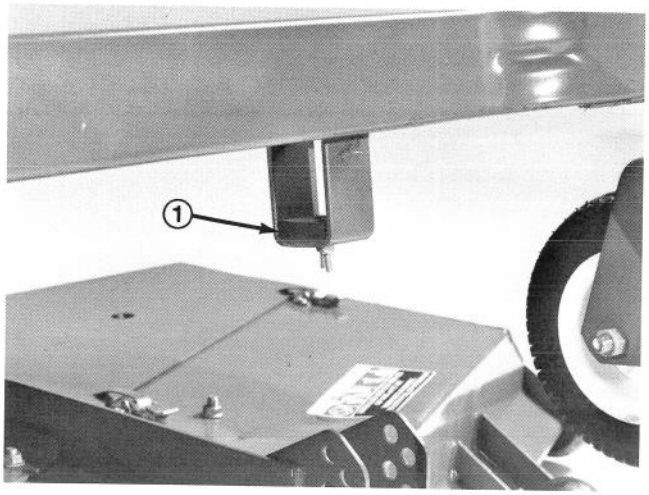

Figure 29

1. Frame cushions

10. Remove capscrews, flatwashers and locknuts from outer spindle in the area where shims must be added. To raise or lower the blade, add a shim, Part No. 3256-24, between spindle housing and bottom of cutting unit. Continue checking alignment of blades and adding shims until tips of blades are within the required dimension.

REPLACING GRASS DEFLECTOR

1. Raise cutting unit to its highest position. Engage parking brake, be sure traction pedal is in neutral and PTO lever is in OFF position. Stop the engine and remove key from switch. Block cutting unit to prevent it from falling accidentally.

2. Remove two capscrews, locknuts, and springs securing deflector mounts to pivot brackets (Fig. 30).

3. To remove the pivot brackets, remove carriage bolts and locknuts (Fig. 30).

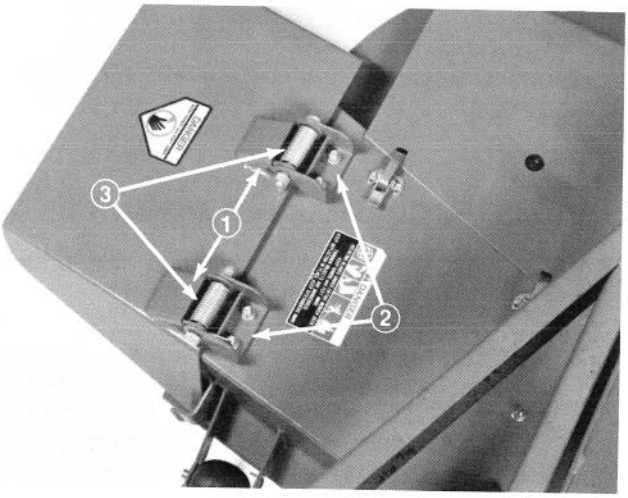

Figure 30

1. Deflector mounts 2. Pivot brackets 3. Pivot springs

CUTTING UNIT MAINTENANCE

4. Reinstall pivot brackets on top of discharge opening with carriage bolts and locknuts. Head of carriage bolts must be on inside of cutting unit.

5. Position deflector mounts on pivot brackets and secure parts together with capscrews, springs and locknuts. Tighten locknuts until they are flush against deflector pivots.

6. Lift deflector and allow it to drop to check spring tension. Deflector must be held firmly in full downward position by spring tension. Correct if necessary.

7. Remove blocking from under cutting unit and lower it to the floor.

ADJUSTING IDLER PULLEY

The idler pulley applies force against the belt so power can be transmitted to the blade pulleys. If the idler is not tensioned against the belt with sufficient force, maximum power will not be transmitted to the pulleys. Tension on the belt requires 40 to 50 ft-lb (54 to 68 N·m) of torque on the large nut, which applies force against the belt. If the idler is not adjusted to these specifications, adjustment is necessary.

1. Lower cutting unit, engage parking brake, be sure traction pedal is in neutral position, PTO lever is in OFF position, stop engine and remove key from switch.

2. Release and unhook latches securing center cover to top of cutting unit (Fig. 31). Remove cover from cutting unit.

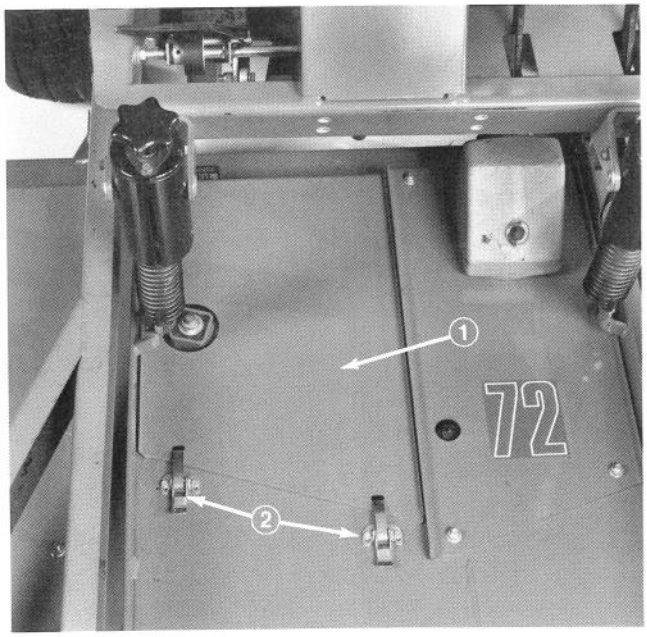

Figure 31

1. Center cover 2. Cover latches

3. Loosen two nuts securing idler plate in place (Fig. 32). Using a socket and torque wrench, tighten the idler adjusting nut (Fig. 32) until proper torque value is achieved.

4. Hold the torque against the belt and tighten the two nuts so idler plate is held securely in place (Fig. 32). Release the idler adjusting nut, install cover, and secure latches.

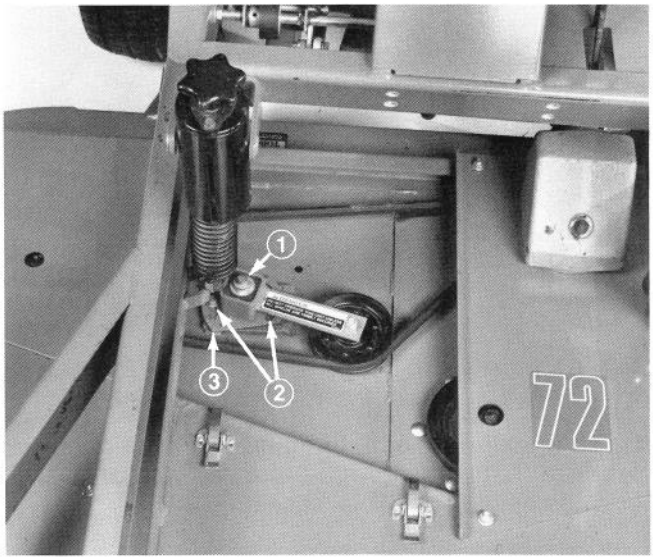

Figure 32

1. Idler adjusting nut
2. Idler plate
3. Flange nuts

ADJUSTING COVER LATCHES

If cutting unit covers fit loose, latch tension may be adjusted by loosening latch mounting screws, and sliding latches (slotted mounting holes in cutting unit) to proper position.

REPLACING DRIVE BELT

The blade drive belt, tensioned by the adjustable idler, is very durable. However, after many hours use, the belt will show signs of wear. Signs of a worn belt are: squealing when belt is rotating, blades slipping when cutting grass, frayed edges, burn marks and cracks. Replace the belt if any of these conditions are evident.

1. Lower cutting unit to the floor. Engage parking brake, be sure traction pedal is in neutral and PTO lever is in OFF position. Stop the engine and remove key from switch.

2. Release and unhook latches securing covers to top of cutting unit. Remove covers (Fig. 33).

3. Loosen two nuts securing idler plate in place (Fig. 32) and remove old belt from pulleys.

CUTTING UNIT MAINTENANCE

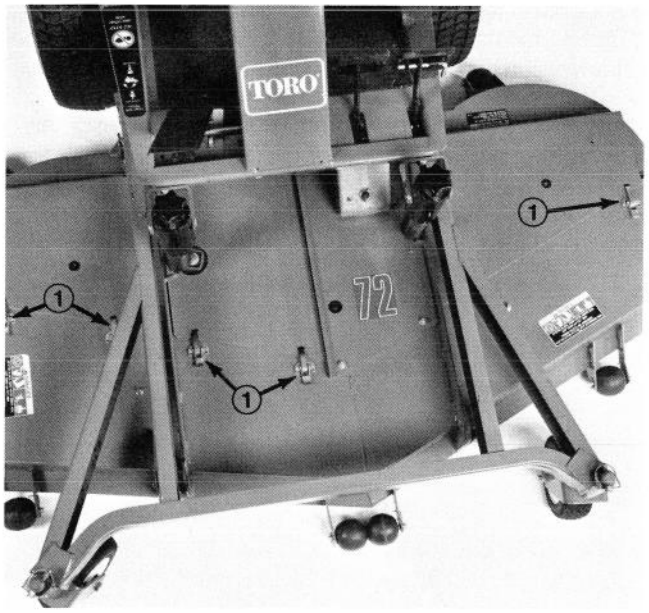

Figure 33

1. Cover latches

4. To install new belt, the gear box base must be removed. To do this, remove four carriage bolts, and locknuts holding gear box base (Fig. 34).

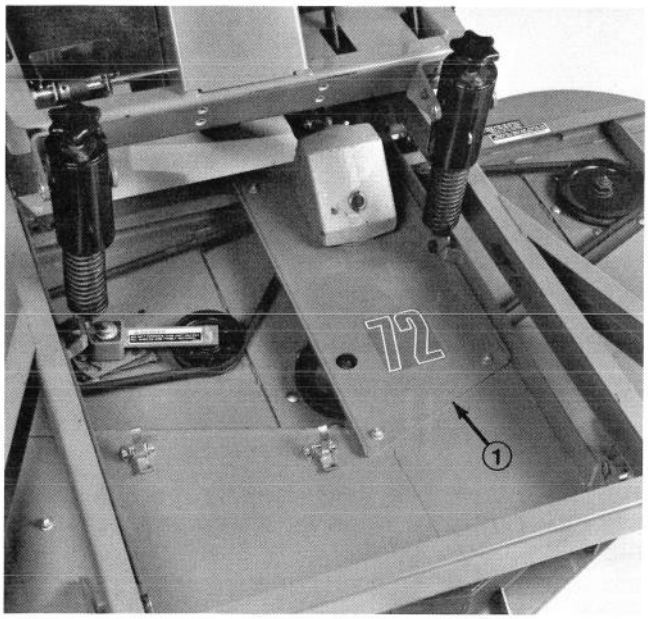

Figure 34

1. Gear box base

5. Install new belt around gear box pulley, spindle pulleys, stationary idler pulley and adjustable idler pulley (Fig. 35).

6. Install gear box base with carriage bolts and locknuts (Fig. 34).

7. Using a torque wrench, adjust tension of idler pulley against the belt: refer to Adjusting Idler Pulley, page 17.

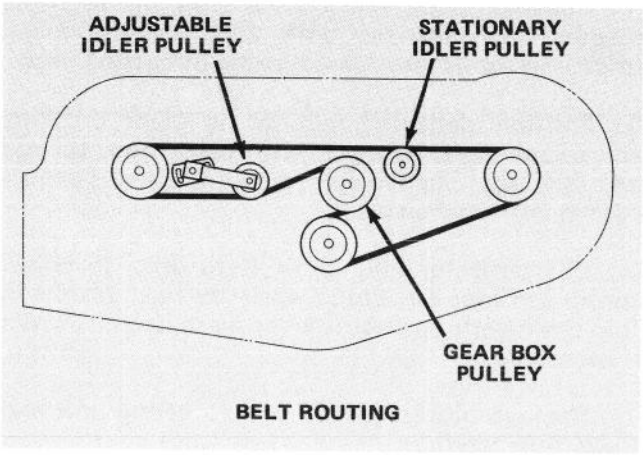

Figure 35

8. Reinstall covers and latch.

REPLACING IDLER PULLEY AND ARM

1. Lower cutting unit, engage parking brake, be sure traction pedal is in neutral, PTO lever is in OFF position and stop the engine.

2. Release and unhook latches securing center cover to top of cutting unit (Fig. 31).

3. Loosen two nuts securing idler plate in place (Fig. 32). Belt tension will be released when nuts are loosened.

4. Remove large nut and flatwasher retaining idler arm on idler plate shaft (Fig. 36). Slide arm off shaft and account for the square key.

5. Remove capscrew and locknut securing idler pulley and arm together (Fig. 36).

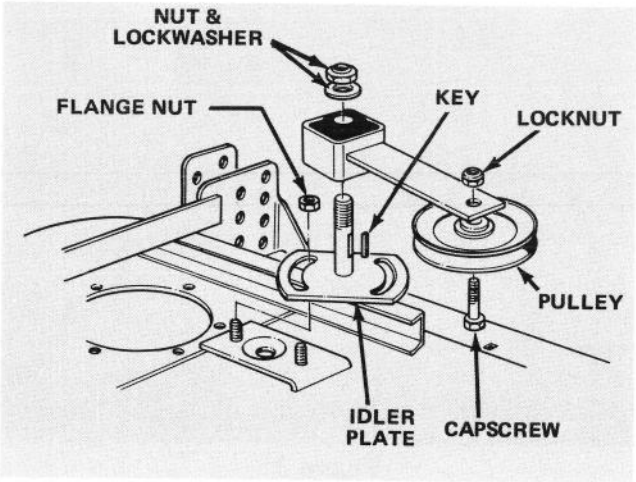

Figure 36

6. To reinstall idler pulley, mount pulley against bottom of idler arm with capscrew and nut. Tighten nut securely.

Note: Head of capscrew must be toward top of cutting unit when idler assembly is installed on idler plate shaft.

7. Install key into keyway in idler plate shaft. Slide idler arm socket onto shaft and retain it in place with large nut. Tighten nut to 35 ft-lb (47.5 N·m).

8. Adjust idler pulley tension against the belt: refer to Adjusting Idler Pulley, page 17.

9. Reinstall cover and latch securely.

REPLACING IDLER PLATE

1. Lower cutting unit, engage parking brake, be sure traction pedal is in neutral and PTO lever is in OFF position. Stop the engine and remove key from ignition switch.

2. Release and unhook latches securing center cover to top of cutting unit (Fig. 31).

3. Loosen two nuts securing idler plate in place (Fig. 32). Belt tension will be released when nuts are loosened.

4. Remove large nut retaining idler arm on idler plate shaft. Slide arm off shaft and account for the square key.

5. Remove two flange nuts, holding slotted idler plate in place (Fig. 36).

6. To install idler plate, slide plate and locknuts onto stud guides. Thread nuts onto stud guides, but do not tighten them.

7. Install key into keyway in idler plate shaft. Slide idler arm socket onto shaft and retain it in place with large nut. Tighten nut to 35 ft-lb (47.5 N·m).

8. Adjust idler pulley tension against the belt: refer to Adjusting Idler Pulley, page 17.

9. Reinstall cover and latch securely.

REPLACING SPINDLE PULLEY

1. Lower cutting unit, engage parking brake, be sure traction pedal is in neutral position and PTO lever is in OFF position. Stop the engine and remove key from ignition switch.

2. Remove flangehead capscrews or release and unhook latches securing covers to top of cutting unit. Remove covers from cutting unit.

3. Loosen two nuts securing idler plate so tension of the idler pulley against the belt is released (Fig. 37).

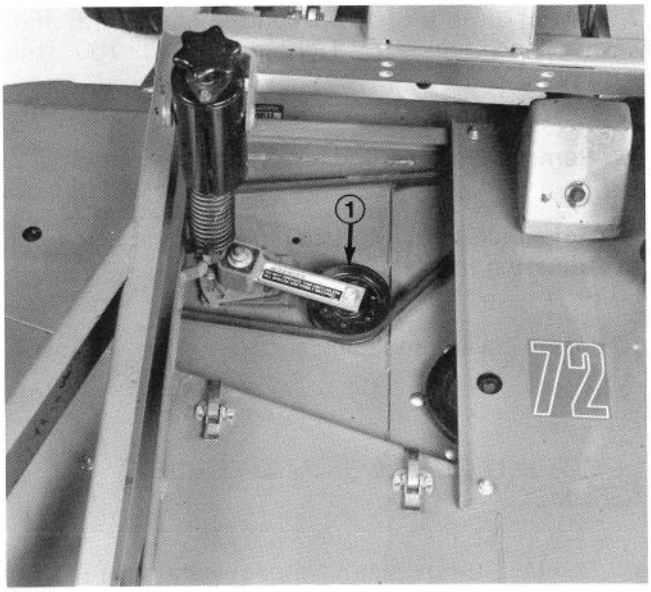

Figure 37

1. Idler pulley

4. Raise cutting unit to its highest position. Engage parking brake, be sure traction pedal is in neutral and PTO lever is in OFF position. Stop the engine and remove key from ignition switch. Block cutting unit to prevent it from falling accidentally.

5. Remove nut and flatwasher retaining pulley on spindle shaft. Pull pulley off shaft.

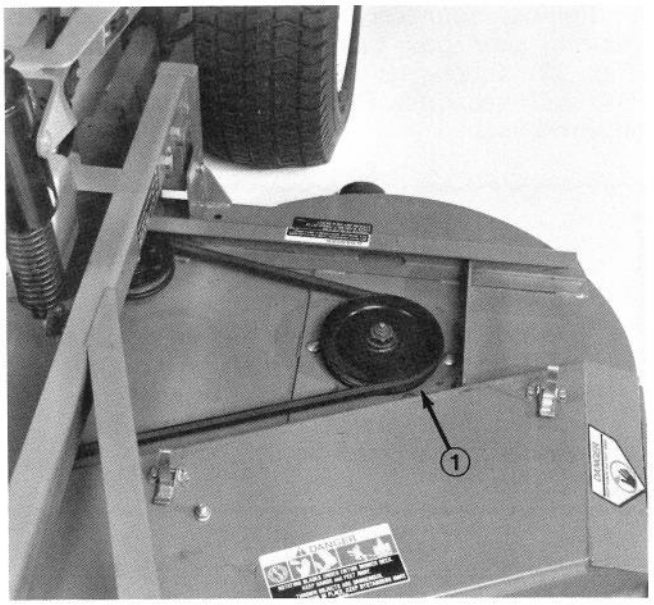

Figure 38

1. Spindle housing assembly

6. Check splines on inside of pulley. If splines are damaged, replace the pulley. When installing a new pulley, check the splines on end of spindle shaft. Splines on the spindle shaft must not be damaged. If splines are damaged, the spindle shaft must be replaced before a new pulley is installed.

7. Install new pulley on spindle shaft with flat-washer and locknut. Tighten nut to 100 ft-lb (136 N·m).

8. Remove blocking and lower cutting unit.

9. Adjust idler pulley tension against the belt: refer to Adjusting Idler Pulley, page 17.

10. Install covers and latch securely.

REMOVING GEAR BOX AND PULLEY ASSEMBLY

1. Lower cutting unit and engage parking brake. Be sure traction pedal is in neutral, PTO lever is in OFF position and shut engine off.

2. Release and unhook latches securing left and center covers to top of cutting unit. Remove covers from cutting unit.

3. Loosen two nuts securing idler plate so tension of idler pulley against the belt is released.

4. Remove four carriage bolts and flange nuts securing gear box base to top of cutting unit (Fig. 39). Slide gear box and base forward until PTO shaft separates. Place gear box base assembly on workbench.

DANGER

Do not start the engine and engage the PTO lever when PTO shaft is not connected to the gear box. If engine is started and PTO shaft is allowed to rotate, serious injury could result.

5. Remove set screws from taper lock bushing (Fig. 40). Install one set screw into threaded hole on side of taper lock (Fig. 40). Tighten set screw until taper lock is loose on inside of pulley hub.

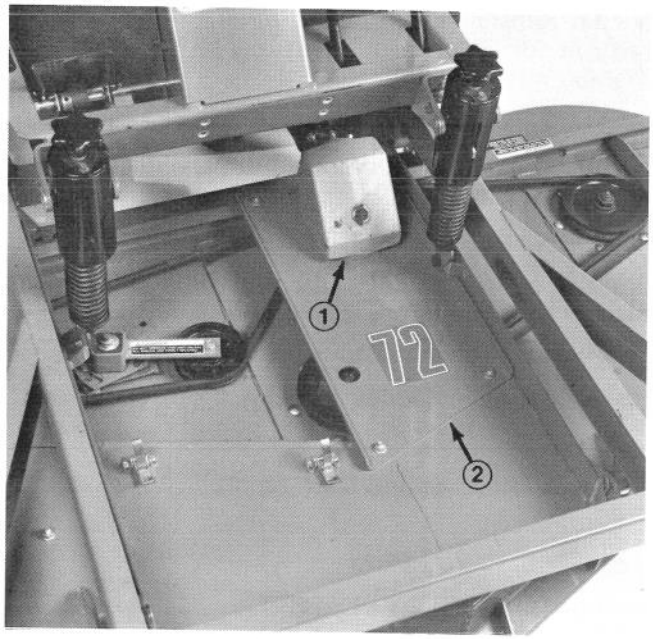

Figure 39

1. Gear box 2. Gear box base

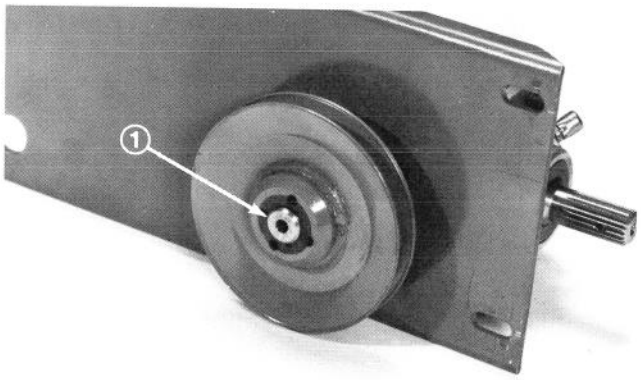

Figure 40

1. Taper lock bushing

Note: Only one set screw is used to loosen the taper lock.

6. Slide gear box pulley and taper lock off gear box output shaft. Account for the woodruff key that held pulley on shaft, and remove set screw from side of taper lock.

REPLACING PULLEY ASSEMBLY

1. To install new pulley, lay pulley on the workbench with the hub side up. Then slide taper lock – small end first – into the pulley hub.

2. Insert woodruff key into keyway in gear box shaft. Slide pulley w/taper lock onto gear box shaft and key (Fig. 40).

CUTTING UNIT MAINTENANCE

Note: Large hub on pulley must face away from gear box, and like the taper lock, pulley must contact shoulder on gear box shaft.

3. Rotate pulley to get non-threaded holes in taper lock aligned with two threaded holes in hub of gear box pulley. Start threading set screws into the two holes and tighten them alternately and evenly until both set screws are tight.

4. Using a brass dowel, or sleeve and hammer, hit the taper lock firmly. Now tighten set screws to 55 in.-lb (6.2 N·m). Continue to hit the taper lock and tighten set screws until 55 in.-lb (6.2 N·m) of torque will not turn the set screws.

5. Check alignment of gear box pulley with spindle pulley. Loosen and relocate taper lock to adjust, if necessary (Fig. 40).

6. Fill recessed socket head in set screws and the other taper lock holes with grease to prevent dirt from packing into the holes.

7. Slide PTO shaft into PTO tube. Loop belt around gear box pulley and mount gear box base on top of cutting unit with four carriage bolts and locknuts (Fig. 39).

8. Lubricate PTO shaft: refer to Lubrication Maintenance, Traction unit Operator's Manual.

9. Install belt around spindle pulleys and idler pulley. Adjust idler pulley tension against the belt: refer to Adjusting Idler Pulley, page 17.

GEAR BOX ASSEMBLY SERVICING

Disassembly:

1. Remove gear box and pulley from machine. Refer to Removing Gear Box and Pulley Assembly, page 20.

2. Remove pipe plug from gear box and drain oil out of gear box (Fig. 41).

3. Scribe a mark on the input and output shaft housings and gearbox to aid assembly operation.

INPUT AND OUTPUT SHAFT REMOVAL

1. Remove five (5) capscrews securing input housing assembly; tap input housing with soft-faced hammer and pull on input shaft to remove from gear box (Fig. 41).

2. Remove five (5) capscrews securing output bearing housing to gear box, tap housing with soft-faced hammer and pull on output shaft to remove assembly from gear box (Fig. 41).

Note: Remember position of vent plug to be sure input housing is in correct position during re-assembly. Keep track of number and color of shims used in each assembly.

IMPORTANT: Input and output housing capscrews are of different lengths. Do not mix them up.

3. Mount input shaft in soft jawed vise, remove nut and thrust washer.

4. Use a bearing separator to remove gear from shaft. Remove square key (Fig. 41).

5. Support mount flange of input housing in arbor press and press shaft, threaded end up, out of housing (Fig. 41).

6. One complete bearing and one bearing cup will remain in housing. Remove remaining bearing cone and drive both cups out of housing with drift punch and hammer. Press the other bearing cone off the shaft.

7. Use steps 3 through 6 to disassemble the output shaft assembly (Fig. 41).

8. Discard and replace the shaft, nut, shaft seal and housing O-ring for both assemblies (Fig. 41). Discard and replace all worn and damaged parts.

ASSEMBLY OF INPUT AND OUTPUT SHAFT ASSEMBLIES:

Note: Use the following procedures to assemble both shaft assemblies. Use an arbor press to install bearings, seals, etc.

1. Press bearing cups into bearing housing with small I.D. of cups toward inside of housing (Fig. 41).

2. Press a bearing cone onto shaft and insert shaft into housing.

3. Press on the remaining bearing cone. Install square key and press on gear. Use Loc-tite 242 or 601 on shaft and gear. Install thrust washer and nut (Fig. 41).

4. Clamp the shaft end into a soft jawed vise and rotate the housing while tightening the nut to insure bearings are matched with races. Tighten until shaft has .001 to .005 inch (0.025 to 0.127 mm) end play.

5. Apply No. 2 Permatex to outer surface of seal, apply oil to seal lips and press new seal into housing with seal lips facing inward (Fig. 41).

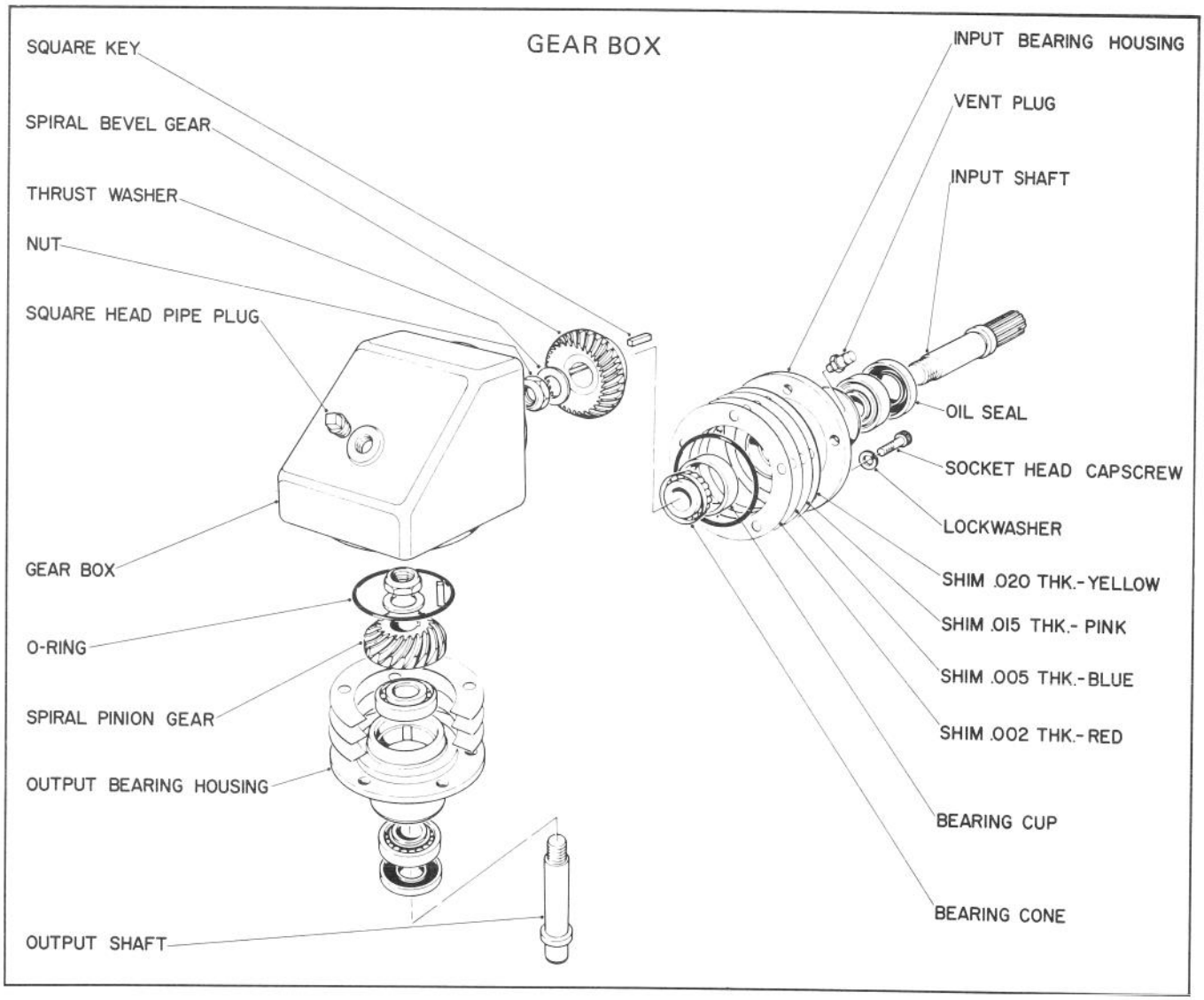

Figure 41

ASSEMBLING INPUT AND OUTPUT SHAFT ASSEMBLIES TO GEAR BOX

IMPORTANT: It is recommended to replace the shims. However, if only the bearings, shafts or gears have been replaced, use the same number and size shims as were used originally. If gear box or bearing housing has been replaced, install a .020 of an inch (0.51 mm) shim as a beginning alignment dimension.

1. Install shims on housing (Fig. 41).

2. Oil O-rings, install on housing (Fig. 41) and insert both shaft assemblies into gear box (Fig. 41).

3. Install the mounting plate, insert the mounting capscrews and torque them to 20-25 ft-lb (27-35 N·m) in both assemblies.

4. Clamp the output shaft of gear box in a soft-jawed vise, lightly clamp a pair of vise-grip pliers to the input shaft, mount a dial indicator with magnetic base to the vise, move vise grips up and down and check input gear blacklash (Fig. 42). Backlash should be .005-.010 inch (0.13-0.25 mm) with indicator positioned one and one-half inch (38 mm) from center of shaft (Fig. 42). If backlash is incorrect, remove input housing assembly and add or subtract shims as necessary. Repeat procedures until correct backlash is obtained. Shims are available in .002, .005, .015 and .020 inch (0.051, 0.13, 0.38 and 0.51 mm) sizes (Fig. 41).

5. Check the input and output gear pattern to assure proper gear mesh has been attained. Remove both shaft assemblies and coat the gear teeth with DyKem steel blue or an equivalent compound and

re-install both assemblies into the gear box. Insure the same number shims are used as established in step 4.

6. Rotate the shafts to establish a wear pattern in the steel blue on the gear teeth and disassemble the input shaft and housing assembly from the gear box.

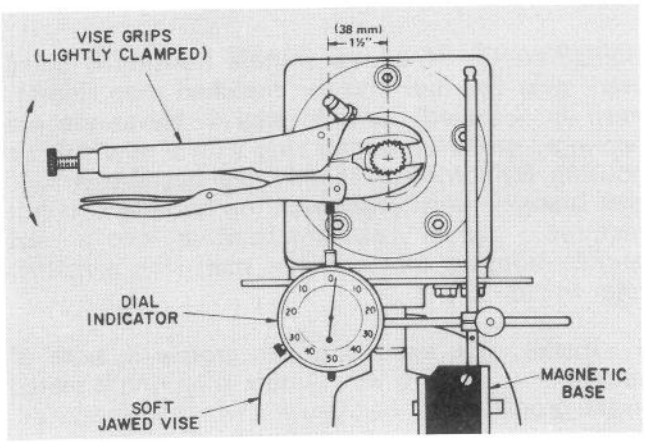

Figure 42

7. Inspect the wear pattern on the gear teeth, compare them to the patterns indicated (Fig. 43). Add or remove shims from output housing to correct any misalignment.

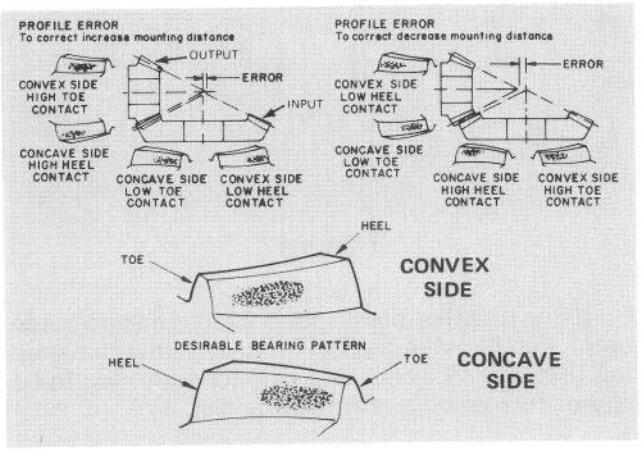

Figure 43

8. Repeat steps 1 through 6 until desirable wear pattern is established, re-assemble assembly into the gear box, torque the capscrews and fill the gear box to the bottom of the gear box plug with SAE 10W-40 or 10W-30 SF engine oil.

9. Install gear box pulley. Refer to Replacing Pulley Assembly, page 20.

REMOVING SPINDLE AND BEARINGS FROM SPINDLE HOUSING

1. Lower cutting unit and engage parking brake. Be sure traction pedal is in neutral and PTO lever is in OFF position. Stop the engine and remove key from ignition switch.

2. Release and unhook latches securing pulley cover on top of spindle housing to be serviced (Fig. 44). Also remove cover over idler pulley (Fig. 44) and loosen two nuts securing idler plate in place. This will release tension on the drive belt.

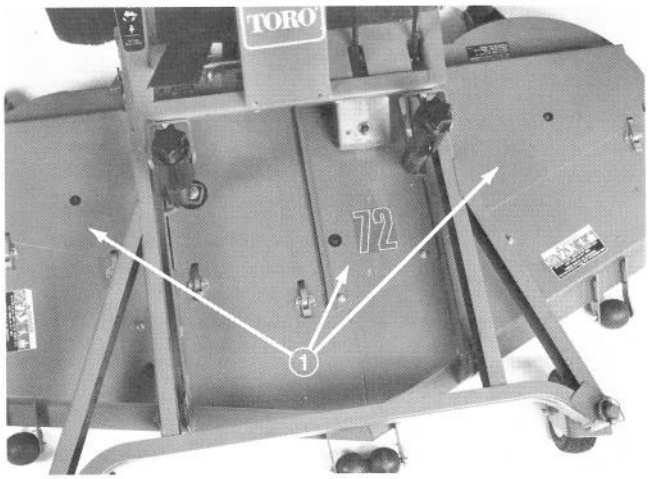

Figure 44

1. Covers

3. Remove belt from spindle to be serviced.

4. Raise cutting unit, stop the engine and remove key from ignition switch. Block cutting unit so it cannot fall accidentally.

5. Remove nut and flatwasher retaining spindle pulley on spindle shaft. Slide pulley off shaft.

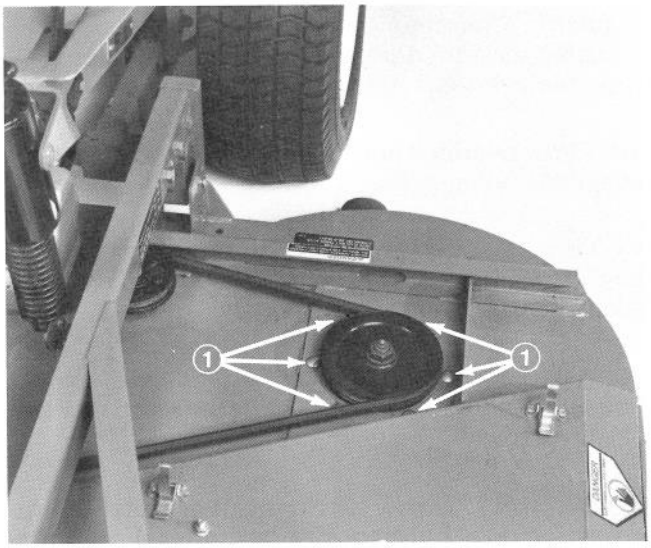

Figure 45

1. Carriage bolts

6. Remove six carriage bolts and flange nuts holding spindle housing assembly against cutting unit (Fig. 45). Slide spindle housing assembly out bottom of cutting unit.

7. If spindle shaft will be replaced, remove bladebolt, lockwasher, anti-scalp cup and blade from spindle shaft (Fig. 46). Otherwise, the blade and its other associated parts may be left on the spindle shaft.

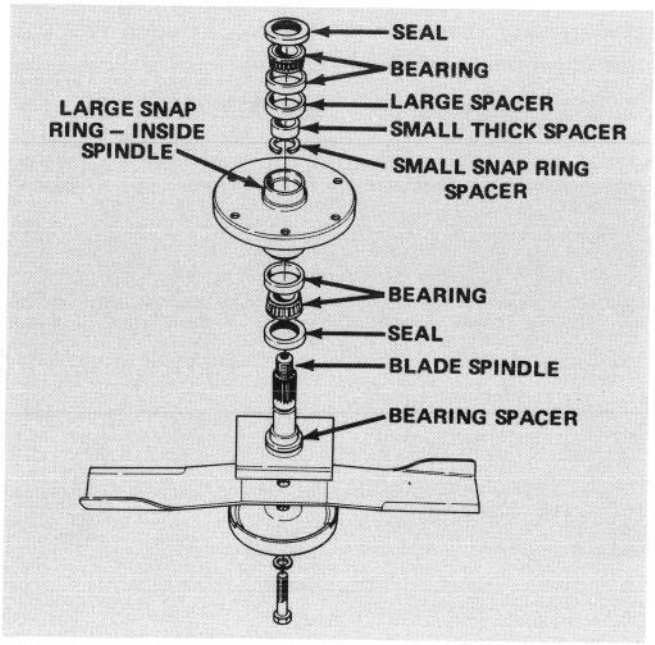

Figure 46

8. Press spindle shaft out of spindle housing (Fig. 46) using an arbor press. Bearing spacer (Fig. 46) remains on spindle shaft as shaft is being removed.

9. The seals (Fig. 46) will be removed next; however, notice the lip of the seal. The lip of the upper seal faces inward, and the lip of the lower seal faces outward. Therefore, new seals must always be installed with the lip facing in the proper direction. Now remove seals from spindle housing.

10. Allow bearings and small thick spacer to fall out of spindle housing (Fig. 46).

11. Using a punch and hammer, drive both bearing cups (Fig. 46) out of spindle housing. Also drive large spacer (Fig. 46) out of housing.

12. A large snap ring is still inside the spindle housing. It should remain there because it cannot be easily removed.

IMPORTANT: If new bearings will be installed into a used spindle housing that has original snap ring installed, discard the large snap ring that came with the bearings because it is not needed. However, new bearings with matched spacer and snap ring must always be installed when spindle housing is being replaced. Replacement bearings are sold only with a matched snap ring and spacers set. The parts cannot be purchased separately.

INSTALLING SPINDLE, BEARINGS AND SEALS INTO SPINDLE HOUSING

IMPORTANT: If a new spindle housing is being used, new bearings and the matched snap ring set must be installed: refer to step 1. Never use old bearings, spacer and snap ring with a new spindle housing. By contrast, use only new bearings w/cups and spacer — not large snap ring because it is not required — when installing bearings into a used spindle housing that still has snap ring installed: refer to step 2.

1. Install large snap ring into groove in bore of spindle housing (Fig. 47). Assure snap ring is seated in the groove.

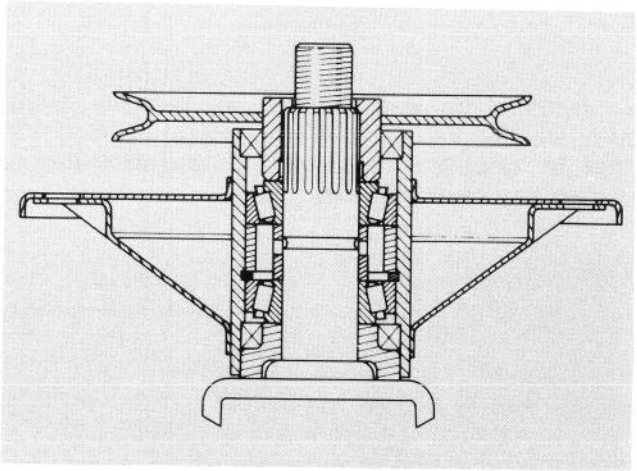

Figure 47

2. Using an arbor press, push the large spacer into top of spindle housing and tightly against the snap ring (Fig. 46). Spacer must contact snap ring to be sure of correct assembly of parts (Fig. 47).

3. Thoroughly oil cups and, using an arbor press, push bearing cups — smallest ID first — into top and bottom of spindle housing (Fig. 46). Top bearing cup must contact spacer that was installed in step 2, and bottom bearing cup must contact snap ring to be sure of correct assembly of parts (Fig. 47). Insure assembly is correct by supporting the first cup and pressing the second against it (Fig. 48).

4. Apply a film of grease on lip on both seals; then install bearing and seal into bottom of spindle housing (Fig. 46). Remember, the bottom seal must

CUTTING UNIT MAINTENANCE

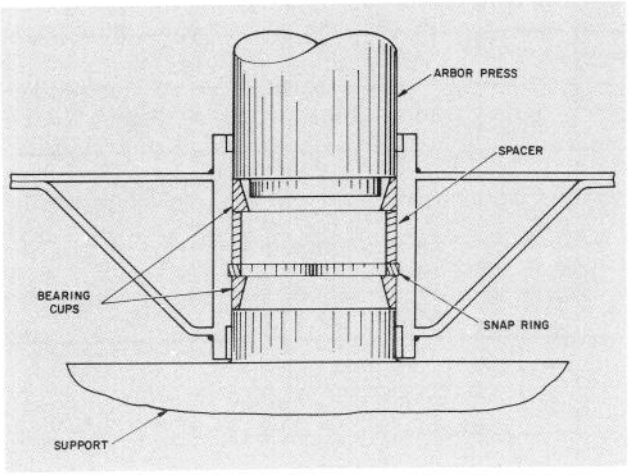

Figure 48

have the lip facing outward not toward inside of spindle housing (Fig. 46).

5. Slide small, thick spacer into spindle housing (Fig. 48). Then, install bearing and seal into top of spindle housing. Lip of the seal must face outward.

6. Check spindle shaft. Make sure it is free of burrs and nicks that could cut the seals and thoroughly lubricate shaft and seal lips.

7. Slide bearing spacer onto spindle shaft. Carefully slide spindle shaft through spindle housing. Bottom seal and bearing spacer fit together when spindle is installed (Fig. 47).

8. Slide pulley end of spindle assembly through hole in cutting unit. Mount spindle assembly in place with six carriage bolts and flange nuts (Fig. 45).

9. Push pulley onto splines of spindle shaft, and retain parts together with large flatwasher and nut. Tighten nut to 100-120 ft-lb (136-163 N·m) and rotate spindle shaft to be sure shaft rotates freely.

10. Adjust idler pulley tension against the belt: refer to Adjusting Idler Pulley, page 18.

11. Reinstall covers and latch securely.

IDENTIFICATION AND ORDERING

MODEL AND SERIAL NUMBERS

The cutting unit has two identification numbers: a model number and a serial number. These numbers are stamped into a plate. The cutting unit identification plate is located on the frame, behind the right caster wheel (Fig. 49). In any correspondence concerning the cutting unit, supply the model and serial numbers to assure correct information and replacement parts are obtained.

To order replacement parts from an authorized TORO Distributor, supply the following information:

1. Model and serial numbers of the cutting unit.

2. Part number, description and quantity of parts desired.

Note: Do not order by reference number if a parts catalog is being used; use the part number.

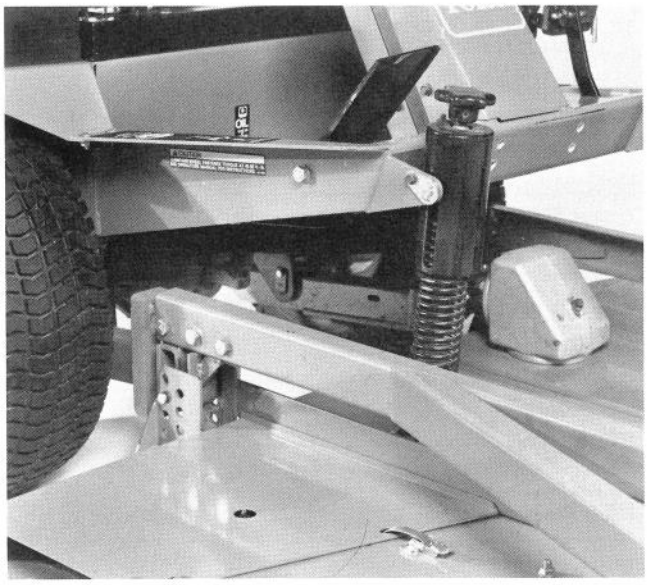

Figure 49

1. Model and serial number

SERVICE INTERVAL CHART

Date									
Hour Meter Reading									
Service Interval ↓		Daily	10	50	100	150	200	250	300
Remove Covers and Wash Out Top of Deck	Daily								
Check Blades	Daily								
Lubricate Castor Arm Bushings	Daily								
Lubricate Castor Wheel Bearings	Daily								
Lubricate Grease Fittings	50								
Clean Cutting Unit	50								
Check Blade Drive Belts	50								
Check Gear Box Oil	50								
Change Gear Box Oil	500								

Date									
Hour Meter Reading									
Service Interval ↓		Daily	10	50	100	150	200	[illegible]	300
Remove Covers and Wash Out Top of Deck	Daily								
Check Blades	Daily								
Lubricate Castor Arm Bushings	Daily								
Lubricate Castor Wheel Bearings	Daily								
Lubricate Grease Fittings	50								
Clean Cutting Unit	50								
Check Blade Drive Belts	50								
Check Gear Box Oil	50								
Change Gear Box Oil	500								

Date									
Hour Meter Reading									
Service Interval ↓		Daily	10	50	100	150	200	250	300
Remove Covers and Wash Out Top of Deck	Daily								
Check Blades	Daily								
Lubricate Castor Arm Bushings	Daily								
Lubricate Castor Wheel Bearings	Daily								
Lubricate Grease Fittings	50								
Clean Cutting Unit	50								
Check Blade Drive Belts	50								
Check Gear Box Oil	50								
Change Gear Box Oil	500								

SERVICE INTERVAL CHART

Date									
Hour Meter Reading									
Service Interval ↓		Daily	10	50	100	150	200	250	300
Remove Covers and Wash Out Top of Deck	Daily								
Check Blades	Daily								
Lubricate Castor Arm Bushings	Daily								
Lubricate Castor Wheel Bearings	Daily								
Lubricate Grease Fittings	50								
Clean Cutting Unit	50								
Check Blade Drive Belts	50								
Check Gear Box Oil	50								
Change Gear Box Oil	500								

Date									
Hour Meter Reading									
Service Interval ↓		Daily	10	50	100	150	200	250	300
Remove Covers and Wash Out Top of Deck	Daily								
Check Blades	Daily								
Lubricate Castor Arm Bushings	Daily								
Lubricate Castor Wheel Bearings	Daily								
Lubricate Grease Fittings	50								
Clean Cutting Unit	50								
Check Blade Drive Belts	50								
Check Gear Box Oil	50								
Change Gear Box Oil	500								

Date									
Hour Meter Reading									
Service Interval ↓		Daily	10	50	100	150	200	250	300
Remove Covers and Wash Out Top of Deck	Daily								
Check Blades	Daily								
Lubricate Castor Arm Bushings	Daily								
Lubricate Castor Wheel Bearings	Daily								
Lubricate Grease Fittings	50								
Clean Cutting Unit	50								
Check Blade Drive Belts	50								
Check Gear Box Oil	50								
Change Gear Box Oil	500								

The Toro Promise

A ONE YEAR LIMITED WARRANTY

The Toro Company promises to repair your TORO Product if defective in materials or workmanship. The following time periods from the date of purchase apply:

Commercial Products . . . . . 1 Year

The costs of parts and labor are included, but the customer pays the transportation costs on walk rotary mowers with cutting unit widths of less than 25".

If you feel your TORO product is defective and wish to rely on The Toro Promise, the following procedure is recommended:

1. Contact your Authorized TORO Distributor or Commercial Dealer (the Yellow Pages of your telephone directory is a good reference source).
2. The TORO Distributor or Commercial Dealer will advise you on the arrangements that can be made to inspect and repair your product.
3. The TORO Distributor or Commercial Dealer will inspect the product and advise you whether the product is defective and, if so, make all repairs necessary to correct the defect without an extra charge to you.

If for any reason you are dissatisfied with the distributor's analysis of the defect or the service performed, you may contact us.

Write:

TORO Commercial Products Service Department
8111 Lyndale Avenue South
Minneapolis, Minnesota 55420

The above remedy of product defects through repair by an Authorized TORO Distributor or Commercial Dealer is the purchaser's sole remedy for any defect.

THERE IS NO OTHER EXPRESS WARRANTY. ALL IMPLIED WARRANTIES OF MERCHANTABILITY AND FITNESS FOR USE ARE LIMITED TO THE DURATION OF THE EXPRESS WARRANTY.

Some states do not allow limitations on how long an implied warranty lasts, so the above limitation may not apply to you.

This Warranty applies only to parts or components which are defective and does not cover repairs necessary due to normal wear, misuse, accidents, or lack of proper maintenance. Regular, routine maintenance of the unit to keep it in proper condition is the responsibility of the owner.

All warranty repairs reimbursable under the Toro Promise must be performed by an Authorized TORO Commercial Dealer or Distributor using Toro approved replacement parts.

Repairs or attempted repairs by anyone other than an Authorized TORO Distributor or Commercial Dealer are not reimbursable under the Toro Promise. In addition, these unauthorized repair attempts may result in additional malfunctions, the correction of which is not covered by warranty.

THE TORO COMPANY IS NOT LIABLE FOR INDIRECT, INCIDENTAL OR CONSEQUENTIAL DAMAGES IN CONNECTION WITH THE USE OF THE PRODUCT INCLUDING ANY COST OR EXPENSE OF PROVIDING SUBSTITUTE EQUIPMENT OR SERVICE DURING PERIODS OF MALFUNCTION OR NON-USE.

Some states do not allow the exclusion or limitation of incidental or consequential damages, so the above limitation or exclusion may not apply to you.

This warranty gives you specific legal rights, and you may also have other rights which vary from state to state.

COUNTRIES OTHER THAN THE UNITED STATES OR CANADA

Customers who have purchased TORO products exported from the United States or Canada should contact their TORO Distributor (Dealer) to obtain guarantee policies for your country, province or state. If for any reason you are dissatisfied with your Distributor's service or have difficulty obtaining guarantee information, contact the TORO importer. If all other remedies fail, you may contact us at The Toro Company.

Compliance with Radio Interference Regulations Certified.
Certifie Conforme au Reglement sur le Brouillage Radioelectrique.

Litho in U.S.A.