Form No. 3383-161 Rev A

TORO®

Count on it.

Operator's Manual

Polar Trac Kit

Groundsmaster® 7200 Series Mower

Model No. 30370—Serial No. 314000001 and Up



Register at www.Toro.com.
Original Instructions (EN)

3383-161 A

This product complies with all relevant European directives, for details please see the separate product specific Declaration of Conformity (DOC) sheet.

⚠ WARNING

CALIFORNIA
Proposition 65 Warning

This product contains a chemical or chemicals known to the State of California to cause cancer, birth defects, or reproductive harm.

Model No. _____

Serial No. _____

This manual identifies potential hazards and has safety messages identified by the safety alert symbol (Figure 2), which signals a hazard that may cause serious injury or death if you do not follow the recommended precautions.



Figure 2

1. Safety alert symbol

Introduction

This kit transforms a summer ride-on, rotary-blade lawnmower into a winter snow removal machine that is intended to be used by professional, hired operators in commercial applications.

Read this information carefully to learn how to operate and maintain your product properly and to avoid injury and product damage. You are responsible for operating the product properly and safely.

You may contact Toro directly at www.Toro.com for product and accessory information, help finding a dealer, or to register your product.

Whenever you need service, genuine Toro parts, or additional information, contact an Authorized Service Dealer or Toro Customer Service and have the model and serial numbers of your product ready. Figure 1 identifies the location of the model and serial numbers on the product. Write the numbers in the space provided.

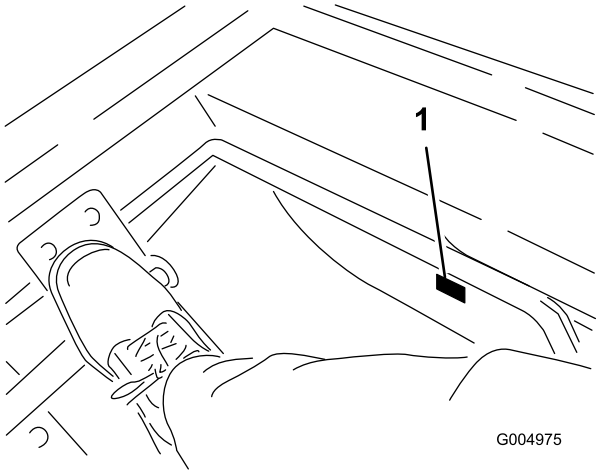

Figure 1

1. Model and serial number location

This manual uses 2 other words to highlight information. **Important** calls attention to special mechanical information and **Note** emphasizes general information worthy of special attention.

© 2014—The Toro® Company
8111 Lyndale Avenue South
Bloomington, MN 55420

Contact us at www.Toro.com.
Printed in the USA.
All Rights Reserved

Contents

Introduction 2
Safety 3
Safe Operating Practices 3
Safety and Instructional Decals 5
Setup 6
1 Install Heat Shields 7
2 Preparing the Engine Cooling System 9
3 Preparing the Electrical System 14
4 Installing the Skid Plate 15
5 Removing the Mower Deck 16
6 Installing the Winter Frame Assembly 19
7 Installing the Cab Mount Supports 23
8 Re-installing the Panels 24
9 Mounting the Cab 25
10 Making the Final Connections and Checking the Operation 26
11 Reading the Manuals 27
Product Overview 27
Controls 27
Operation 28
Think Safety First 28
Attachments 28
Snowthrower Wire Eyelet 28
Winter to Summer Conversion 29
Summer to Winter Conversion 34
Maintenance 44
Recommended Maintenance Schedule(s) 44
Lubrication 44
Greasing and Lubrication 44
Electrical System Maintenance 45
Checking the Fuses 45
Drive System Maintenance 46
Checking the Tire Pressure 46
Removing the Rear Wheel 46
Storage 47
Machine 47

Safety

Improper use or maintenance by the operator or owner can result in injury. To reduce the potential for injury, comply with these safety instructions and always pay attention to the safety alert symbol, which means Caution, Warning, or Danger—personal safety instruction. Failure to comply with the instruction may result in personal injury or death.

Safe Operating Practices

This product is capable of amputating hands and feet and throwing objects. Always follow all safety instructions to avoid serious injury or death.

Training

- Read the *Operator's Manual* and other training material carefully. Be familiar with the controls, safety signs, and the proper use of the equipment.
- Never allow children or people unfamiliar with these instructions to use the machine. Local regulations can restrict the age of the operator.
- Never operate while people, especially children, or pets are nearby.
- Keep in mind that the operator or user is responsible for accidents or hazards occurring to other people or their property.
- Do not carry passengers.
- All drivers should seek and obtain professional and practical instruction. Such instruction should emphasize:
  - the need for care and concentration when working with ride-on machines;
  - control of a ride-on machine sliding on a slope will not be regained by the application of the control levers. The main reasons for loss of control are:
    - ◊ insufficient track grip, especially on wet grass, ice or snow;
    - ◊ being driven too fast;
    - ◊ inadequate braking;
    - ◊ the type of machine is unsuitable for its task;
    - ◊ lack of awareness of the effect of ground conditions, especially slopes;
    - ◊ incorrect hitching and load distribution.

Preparation

- While operating, always wear substantial footwear and long trousers. Do not operate the equipment when barefoot or wearing open sandals.
- Thoroughly inspect the area where the equipment is to be used and remove all objects which may be thrown by the machine.

- Replace faulty silencers/mufflers.
- Before using, always visually inspect to see that the attachments are not worn or damaged. Replace worn or damaged components.

Safe Handling of Fuels

- To avoid personal injury or property damage, use extreme care in handling gasoline. Gasoline is extremely flammable and the vapors are explosive.
- Extinguish all cigarettes, cigars, pipes, and other sources of ignition.
- Use only an approved fuel container.
- Never remove fuel cap or add fuel with the engine running.
- Allow engine to cool before refueling.
- Never refuel the machine indoors.
- Never store the machine or fuel container where there is an open flame, spark, or pilot light such as on a water heater or on other appliances.
- Never fill containers inside a vehicle or on a truck or trailer bed with a plastic liner. Always place containers on the ground away from your vehicle before filling.
- Remove equipment from the truck or trailer and refuel it on the ground. If this is not possible, then refuel such equipment with a portable container, rather than from a fuel dispenser nozzle.
- Keep the nozzle in contact with the rim of the fuel tank or container opening at all times until fueling is complete. Do not use a nozzle lock open device.
- If fuel is spilled on clothing, change clothing immediately.
- Never overfill fuel tank. Replace fuel cap and tighten securely.

Operation

- Be alert, slow down and use caution when making turns. Look behind and to the side before changing directions.
- Engine exhaust contains carbon monoxide, which is an odorless, deadly poison that can kill you. Do not run engine indoors or in an enclosed area where fumes can collect.
- Operate only in daylight or in good artificial light.
- Before attempting to start the engine, disengage all attachment clutches and place in neutral.
- When operating near drop offs or bodies of water, do not use on slopes greater than 15 degrees.
- Use care when pulling loads or using heavy equipment.
  - Use only approved draw bar hitch points.
  - Limit loads to those you can safely control.
  - Do not turn sharply. Use care when reversing.
- This machine is not designed or equipped for on-road use and is a “slow-moving vehicle." If you must cross or travel on a public road, you should be aware of and comply with local regulations, such as required lights, slow moving vehicle signs, and reflectors.
- When using any attachments, never direct discharge of material toward bystanders nor allow anyone near the machine while in operation. Some attachments, such as a snowthrower, are capable of amputating hands and feet and throwing objects
- Never operate the machine with damaged guards, shields, or without safety protective devices in place.
- Do not operate the machine under the influence of alcohol or drugs.
- Lightning can cause severe injury or death. If lightning is seen or thunder is heard in the area, do not operate the machine; seek shelter.
- Do not change the engine governor settings or overspeed the engine. Operating the engine at excessive speed may increase the hazard of personal injury.
- Before leaving the operators position:
  - disengage the power take off and lower the attachments;
  - place in neutral and set the parking brake;
  - stop the engine and remove the key.
- If an attachment should start to vibrate abnormally, stop the machine and check immediately for the cause.
- Disengage drive to attachments, stop the engine, set the parking brake and remove the ignition key:
  - before clearing blockages or unclogging chute;
  - before checking, cleaning or working on the attachment
  - after striking a foreign object. Inspect the attachment for damage and make repairs before restarting and operating the equipment;
  - if the machine starts to vibrate abnormally (check immediately).
- Disengage drive to attachments when transporting, not in use or any time the attachment is in the raised position.
- Stop the engine and disengage drive to attachment:
  - before refuelling;
  - before making height adjustment unless adjustment can be made from the operators position.
- Use only Toro approved attachments.

Slope Operation

- Remember there is no such thing as a safe slope. Travel on slopes requires particular care. To guard against overturning:
  - do not stop or start suddenly when on a slope;
  - use slow speeds on slopes and during tight turns;
  - stay alert for humps and hollows and other hidden hazards;

- Do not operate near drop-offs, ditches, steep banks or water. Tracks dropping over edges can cause roll overs, which may result in serious injury, death or drowning.
- Do not operate on slopes where slippery conditions could reduce traction and could cause sliding and loss of control.
- Do not make sudden turns or rapid speed changes.
- Reduce speed and use extreme caution on slopes.
- Remove or mark obstacles such as rocks, tree limbs, etc. from the operating area. Tall grass can hide obstacles.
- Watch for ditches, holes, rocks, dips, and rises that change the operating angle, as rough terrain could overturn the machine.
- Avoid sudden starts when operating uphill because the machine may tip backwards.
- Do not operate on ice incapable of supporting the weight of this machine.

Maintenance and Storage

- Keep all nuts, bolts and screws tight to be sure the equipment is in safe working condition.
- Never store the equipment with fuel in the tank inside a building where fumes may reach an open flame or spark.
- Allow the engine to cool before storing in any enclosure.
- To reduce the fire hazard, keep the engine, silencer/muffler, battery compartment and fuel storage area free of grass, leaves, or excessive grease.
- Replace worn or damaged parts for safety.
- If the fuel tank has to be drained, do this outdoors.
- When machine is to be parked, stored or left unattended, lower the attachment unless a positive mechanical lock is used.
- Use only genuine Toro replacement parts to ensure that original standards are maintained.

Hauling

- Use care when loading or unloading the machine into a trailer or truck.
- Use full width ramps for loading machine into trailer or truck.
- Tie the machine down securely using straps, chains, cable, or ropes. Both front and rear straps should be directed down and outward from the machine

Safety and Instructional Decals

Safety decals and instructions are easily visible to the operator and are located near any area of potential danger. Replace any decal that is damaged or lost.

The following instructional decal is applied to components supplied with this kit and is used in the conversion process.



112-6312

1. Read the *Operator's Manual.*

Setup

Loose Parts

Use the chart below to verify that all parts have been shipped.

Procedure	Description	Qty.	Use
1	Heat shield-rear panel (supplied with cab model 30371)	1	Install the heat shields
	Heat shield-front cover (supplied with cab model 30371)	1	
	Heat shield-seat (supplied with cab model 30371)	1	
	Heat shield-seat (supplied with kit)	1	
	Heat shield-seat 2 x 10 inch (supplied with cab model 30371)	1	
	Rubber grommet	3	
2	Cab assembly (supplied with cab model 30371)	1	Prepare the engine cooling system
	Nipple coupler	2	
	Quick disconnect coupler	2	
	Hose clamp	4	
	Tee fitting	1	
	Hose clamp-large (supplied with cab model 30371)	2	
	Hose clamp-small (supplied with cab model 30371)	2	
	Hose adapter fitting	1	
	Bulkhead bracket	1	
	Self-tapping screw (5/16 inch)	2	
	Dust plug	1	
	Dust cap	1	
	Dual contact switch	1	
3	Cab harness	1	Prepare the electrical system
	Fusible link	1	
	Cable tie	2	
	Cable tie (supplied with cab model 30371)	4	
4	Skid plate	1	Install the skid plate
	Flange-head bolt (3/8 x 1-3/4 inches)	2	
	Flange nut (3/8 inch)	4	
	Bolt (3/8 x 1 inch)	2	
5	Vertical tube support assembly	2	Remove the mower deck.
	Conversion bracket, L.H.	1	
	Conversion bracket, R.H.	1	
	Clevis pin	2	
	Self-tapping screw (1/4 inch)	2	
	Screw (3/8 x 2–1/4 inch)	2	
	Flange nut (3/8 inch)	2	
	Hose plug	2	

Procedure	Description	Qty.	Use
6	Hose cover	2	Install the winter frame assembly
	Cable tie	4	
	Winter frame assembly	1	
	Wheel and tire assembly	6	
	Lug nut	20	
	Coupler pin	2	
	Tracks	2	
7	Cab mount support (supplied with cab model 30371)	2	Install the cab mount supports.
	Bolt (1/2 x 3–1/2 inches) (supplied with cab model 30371)	2	
	Nut (1/2 inch) (supplied with cab model 30371)	2	
	Bolt (3/4 x 3–1/2 inches) (supplied with cab model 30371)	2	
	Lockwasher (3/4 inch) (supplied with cab model 30371)	2	
	Nut (3/4 inch) (supplied with cab model 30371)	2	
8	Corner mat (supplied with cab model 30371)	2	Re-install the panels
	Seal	2	
9	Rubber cab mount (supplied with cab model 30371)	4	Mount the cab
	Bolt (1/2 x 3 inches) (supplied with cab model 30371)	4	
	Washer-Steel (1/2 x 2–1/2 inches) (supplied with cab model 30371)	4	
	Washer-rubber (1/2 x 2–1/2 inches) (supplied with cab model 30371)	4	
	Nut (1/2 inch) (supplied with cab model 30371)	4	
	Corner mat (supplied with cab model 30371)	2	
	Power Point Shield	1	
11	Operator's Manual	1	Read the manuals before operating the machine and use the jacking tube for seasonal conversion.
	Parts Catalog	1	
	Pre-delivery Inspection Sheet	1	
	Certificate of Quality	1	
	Jacking tube	1	
	Jacking tube bolts	2	
	Eyelet	1	
	Spacer	1	
	Flange nut (1/4 inch)	1	

Note: All references to the installation or operation of the cab refer to Cab Model 30371 only.

Important: The fasteners on the covers of this machine are designed to remain on the cover after removal. Loosen all of the fasteners on each cover a few turns so that the cover is loose but still attached, then go back and loosen them until the cover comes free. This will prevent you from accidentally stripping the bolts free of the retainers.

1

Install Heat Shields

Parts needed for this procedure:

1	Heat shield-rear panel (supplied with cab model 30371)
1	Heat shield-front cover (supplied with cab model 30371)
1	Heat shield-seat (supplied with cab model 30371)
1	Heat shield-seat (supplied with kit)
1	Heat shield-seat 2 x 10 inch (supplied with cab model 30371)
3	Rubber grommet

Procedure

Note: To gain additional access to the engine area, the hood may be removed by removing the hair pin cotter securing the hood to the pivot brackets.

1. Start the machine and lower the mower deck to the lowest height of cut. Position the machine on a level surface so the mower deck frame can be rolled away and replaced with the winter frame.
2. Move the seat to the fully forward position. Release the seat latch and tip the seat forward.
3. Remove the 6 screws securing the rear panel to the frame and remove the rear panel (Figure 3).

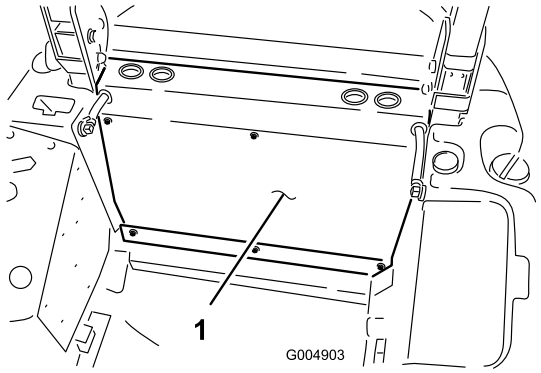

Figure 3

1. Rear panel

4. Clean the engine side of the rear panel. Make sure all grease and/or oil is removed from the panel to assure proper adhesion.
5. Remove the backing and affix the self-adhesive heat shield material to the engine side of the rear panel, positioning as shown in Figure 4. Do not re-install the panel at this time.

Note: The heat shield material must be affixed so that the rear panel can be reinstalled to the frame without pinching the heat shield material.

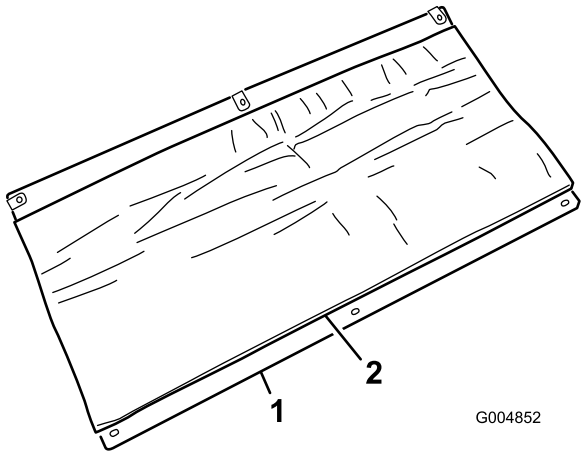

Figure 4

1. Rear panel
2. Heat shield material

6. Unplug the seat switch wire harness from the bottom of the seat (Figure 5).

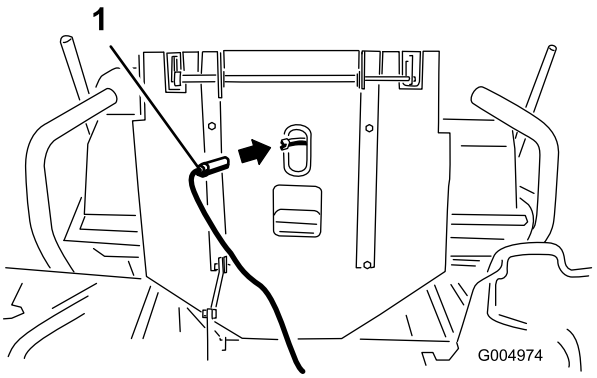

Figure 5

1. Seat switch harness connector

7. Clean the bottom of the seat mount plate. Make sure all grease and/or oil is removed from the seat plate to assure proper adhesion.
8. Remove the backing and affix the self-adhesive heat shield to the bottom of the seat mount plate (Figure 6).

Note: On traction units that have a serial number greater than 313000001, install the seat heat shield included with the kit. Do not use the shields included with the cab.

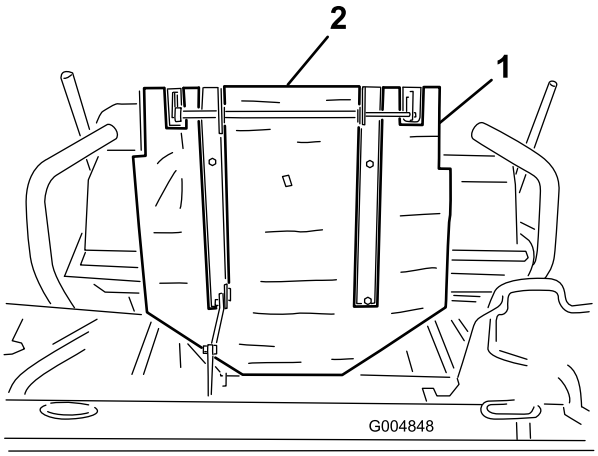

Figure 6

1. Heat shield
2. Heat shield 2 x 10 inch piece

9. Insert the seat wire harness through the slit in the heat shield.
10. Remove the backing and affix the 2 x 10 inch piece of self-adhesive heat shield between the seat latches on the bottom of the seat mount plate (Figure 6).
11. Plug the seat switch wire harness back into the seat connector.

    Note: Steps 12 and 13 are only required on traction units with serial numbers prior to 312999999.

12. Remove the 3 front cover mounting screws and remove the cover (Figure 7).

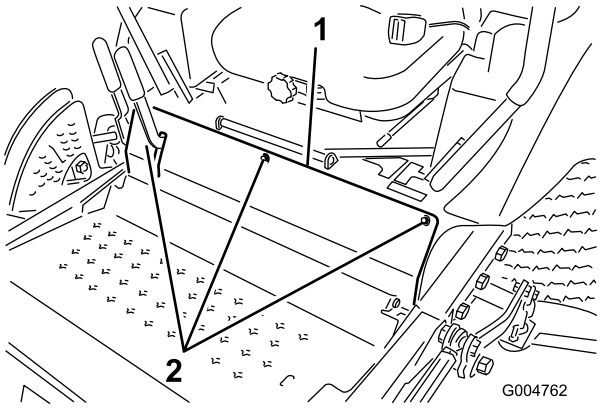

Figure 7

1. Front cover
2. Mounting bolts

13. Clean the engine side of the front cover and install the self-adhesive heat shield material (Figure 8). The heat shield must be positioned so that the cover can be reinstalled without clamping the heat shield material between the access cover and the frame. Do not install the panel at this time.

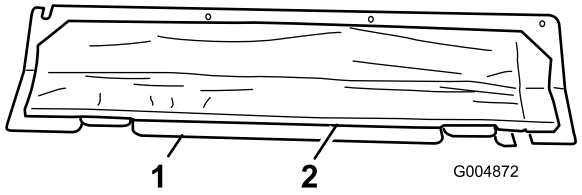

Figure 8

1. Front cover
2. Heat shield

14. Install rubber grommets into the 3 holes in the rear frame mount as shown in (Figure 9).

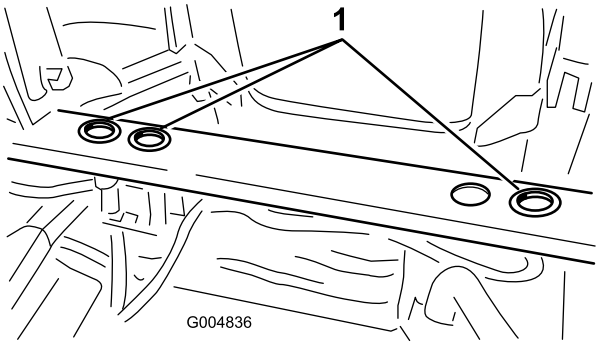

Figure 9

1. Rubber grommets

2

Preparing the Engine Cooling System

Parts needed for this procedure:

1	Cab assembly (supplied with cab model 30371)
2	Nipple coupler
2	Quick disconnect coupler
4	Hose clamp
1	Tee fitting
2	Hose clamp-large (supplied with cab model 30371)
2	Hose clamp-small (supplied with cab model 30371)
1	Hose adapter fitting
1	Bulkhead bracket
2	Self-tapping screw (5/16 inch)
1	Dust plug
1	Dust cap
1	Dual contact switch

Procedure

1. To gain access to the heater supply hoses, remove the screws securing the rear of the side panels and the back panel to the cab assembly and remove the back panel (Figure 10). Do not remove the side panels.

   Note: The cab assembly comes supplied with additional hose length. This hose will be cut to length later.

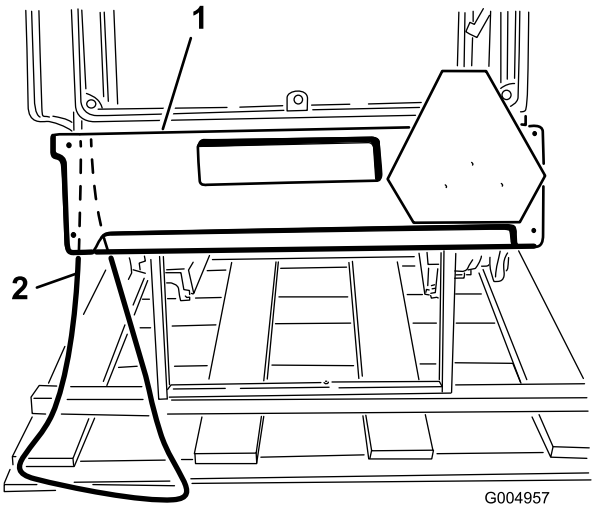

Figure 10

1. Cab Back panel 2. Hose labeled Pressure

2. On the left rear corner of the cab assembly, locate the label on the hose marked "Pressure" (Figure 10).
3. Measure down 43.1 cm (17 inches) from where the hose exits the frame, mark the hose and cut the hose at this location (Figure 11).

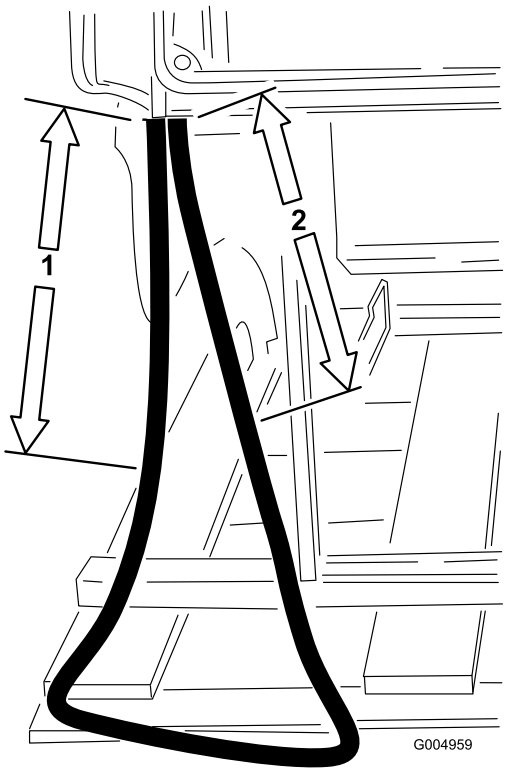

Figure 11

1. 17 inches (pressure hose) 2. 20 inches (return hose)

4. On the other end of the hose, measure down 50.8 cm (20 inches) from where the hose exits the frame, mark the hose and cut the hose at this location (Figure 11). This will be the return hose.
5. Insert the barb end of a nipple coupler into the pressure hose and secure with a hose clamp (Figure 12).

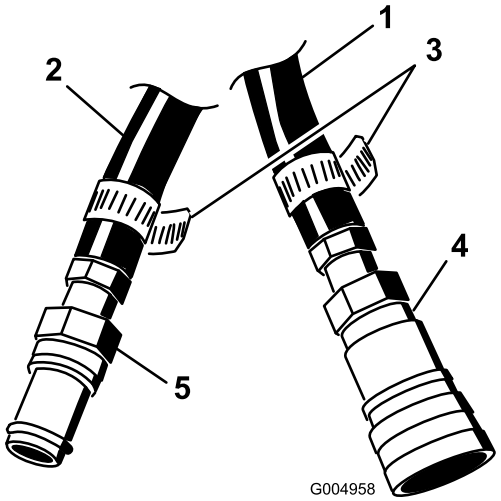

Figure 12

1. Return hose
2. Pressure hose
3. Hose clamps
4. Quick disconnect coupler
5. Nipple coupler

6. Insert the barb end of a quick disconnect coupler into the return hose and secure with a hose clamp (Figure 12).
7. From the remaining piece of hose cut 2 lengths of hose, 140 cm (55 inches) and 57 cm (22–1/2 inches) (Figure 13). Discard any remaining hose. These will be used to complete the traction unit connections.

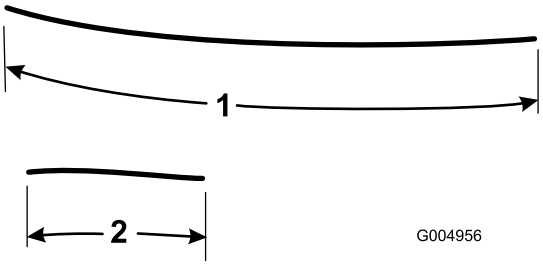

Figure 13

1. 140 cm (55 inches)
2. 57 cm (22–1/2 inches)

8. Locate the 2 mounting holes in the left side of the rear frame mount (Figure 14).

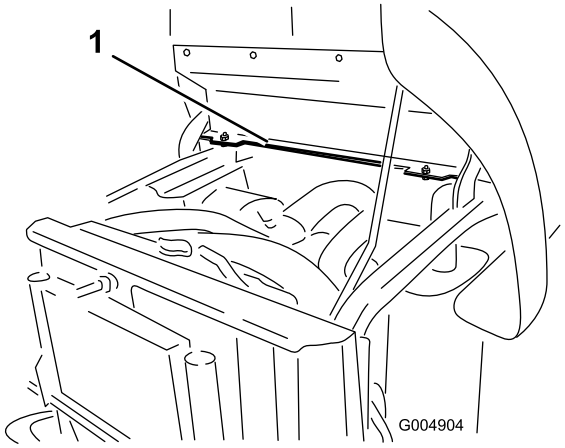

Figure 14

1. Rear frame mount

9. Install the bulkhead bracket to the left rear frame mount with 2 self-tapping screws (5/16 inch) (Figure 15).

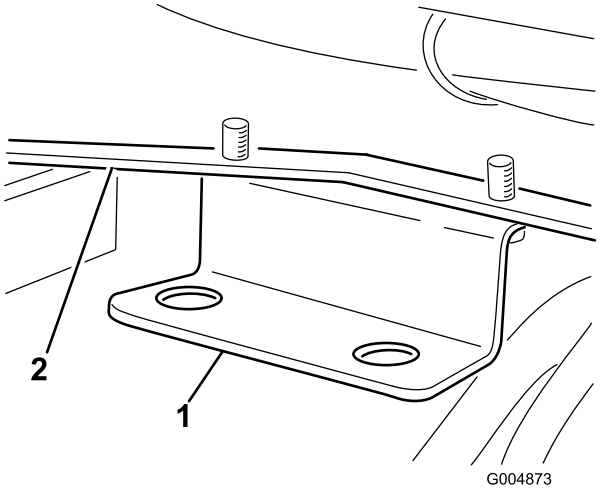

Figure 15

1. Bulkhead bracket
2. Left rear frame mount

10. Install a dust plug onto the quick disconnect coupler and insert the barbed end of the coupler into the outer (left) hole in the bulkhead bracket (Figure 16).

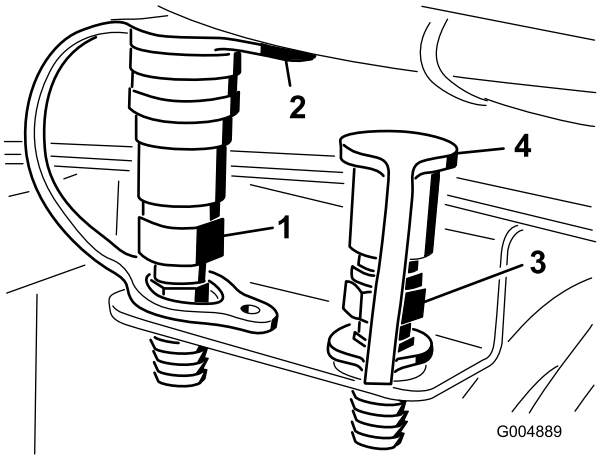

Figure 16

1. Quick disconnect coupler
2. Dust plug
3. Nipple coupler
4. Dust cap

11. Install a dust cap to a nipple coupler and insert the barbed end of the coupler into the inner hole in the bulkhead bracket (Figure 16).
12. Place a suitable drain pan under the radiator and drain the radiator.
13. Cut the lower radiator hose in half on the white line as shown in Figure 17.

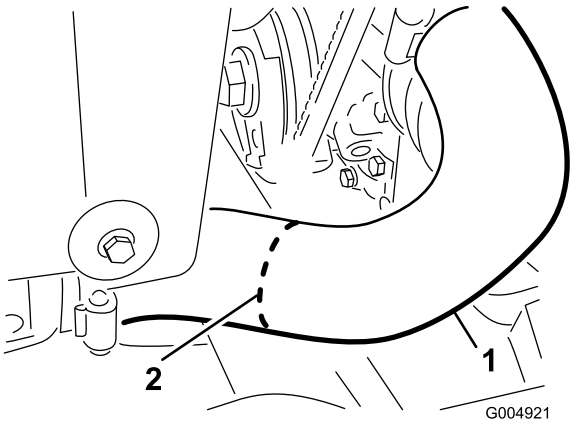

Figure 17

1. Lower radiator hose
2. White line

14. Install the tee fitting into the hoses and secure with hose clamps as shown in Figure 18.

    Note: The hose barb is to point rearward toward the radiator fan shroud.

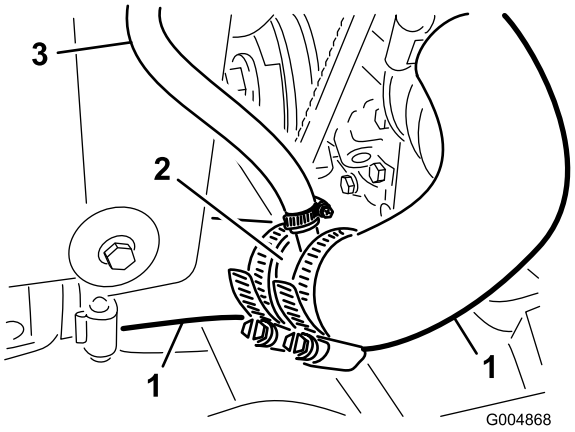

Figure 18

1. Radiator hose
2. Tee fitting
3. 132 cm (52 inch) long hose

15. Connect the 140 cm (55 inch) length of previously cut hose to the new tee fitting in the radiator hose (Figure 18). Secure the hose to the tee fitting with a hose clamp. Route the hose behind the radiator over flow tank, up the right side of the radiator, across the top of the radiator to the left side and under the air cleaner as shown in Figure 19. Insert a hose clamp onto the hose and connect the hose to the nipple coupling (Figure 20). This is the return hose.

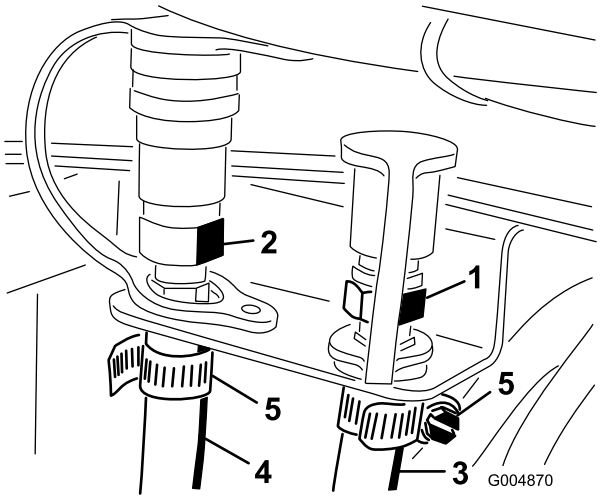

Figure 19

1. Nipple coupling
2. Quick disconnect coupling
3. 140 cm (55 inch) long hose (Return hose)
4. 57 cm (22–1/2 inch) long hose (Pressure hose)
5. Hose clamp

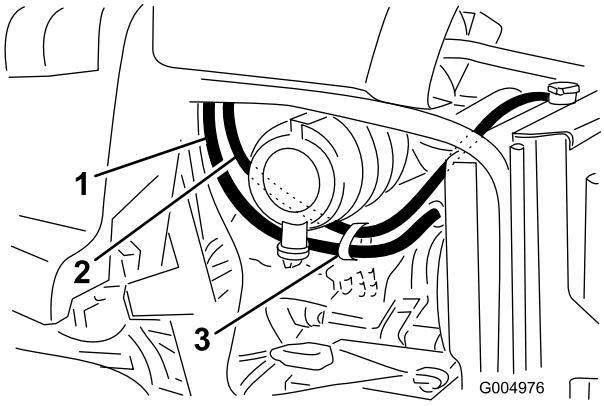

Figure 20

1. 57 cm (22–1/2 inch) hose
2. 132 cm (52 inch) Hose
3. Cable tie

16. Disconnect the wire and remove the thermo-switch from the left side of the engine thermostat housing (Figure 21). Discard the switch.

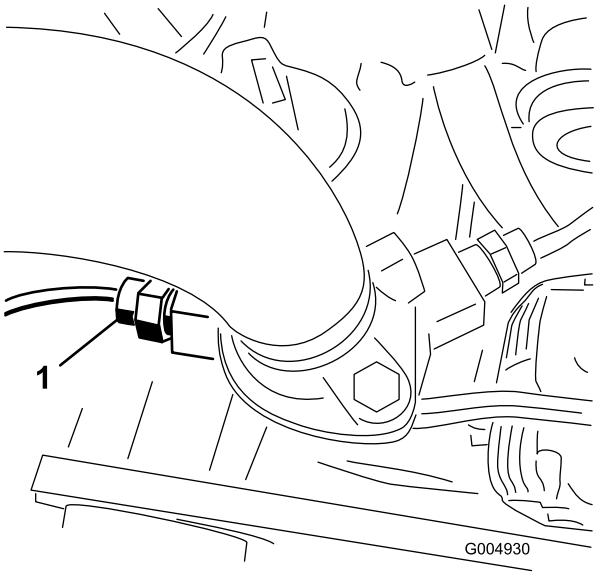

Figure 21

1. Thermo-switch

17. Install the hose adapter fitting into the engine thermostat housing (Figure 22).

Note: Apply pipe sealant to the male pipe thread of all switches and adapters prior to installation.

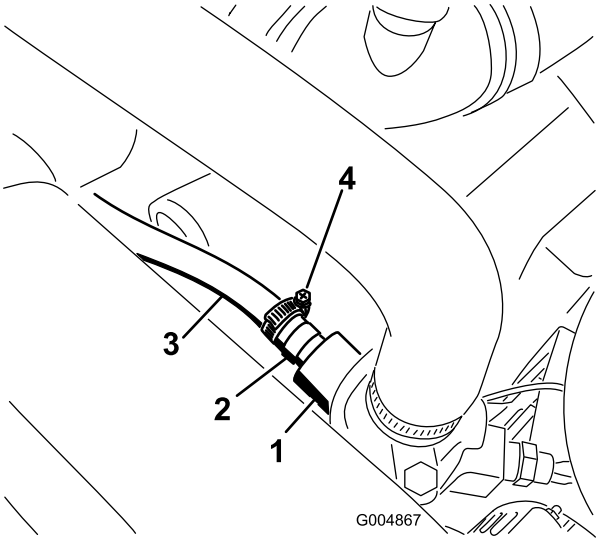

Figure 22

1. Engine thermostat housing
2. Hose adapter fitting
3. 57 cm (22–1/2 inch) long hose
4. Hose clamp

18. Connect the 57 cm (22–1/2 inch) length of hose to the engine thermostat housing adapter fitting (Figure 22). Secure the hose to the adapter fitting with a hose clamp. Route the hose under the air cleaner as shown in Figure 22. Install a hose clamp onto the hose and connect the hose to the quick coupler Figure 22). This is the pressure hose.

Note: Route the hoses away from any hot, rotating or sharp objects. Secure the two coupler hoses together with a cable tie as shown in Figure 22.

19. Disconnect the wire and remove the switch from the right side of the engine thermostat housing (Figure 23).

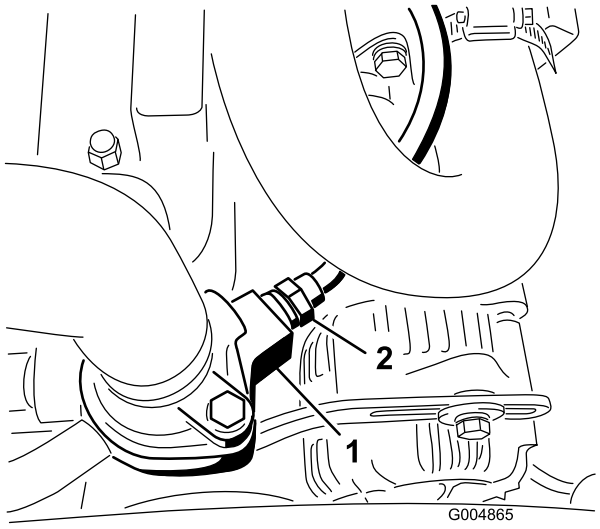

Figure 23

1. Engine thermostat housing
2. Switch

20. Install the new dual contact switch to the right side of the engine thermostat housing (Figure 24).

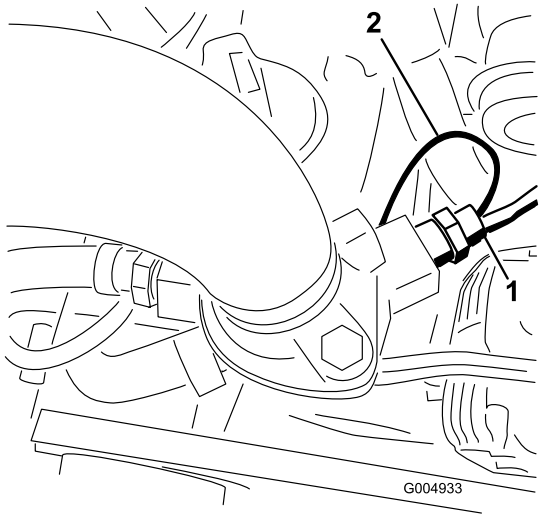

Figure 24

1. Dual contact switch
2. Wire from old left switch

21. Secure the wire, previously connected to the right side switch, to the male spade terminal.
22. Connect the wire, previously connected to the left side switch, to the lead on the new switch.

3

Preparing the Electrical System

Parts needed for this procedure:

1	Cab harness
1	Fusible link
2	Cable tie
4	Cable tie (supplied with cab model 30371)

Procedure

Route and secure the cab harness and fusible link as follows:

1. Insert the wires from the large harness connector down thru the right grommet in the rear frame mount (Figure 25).

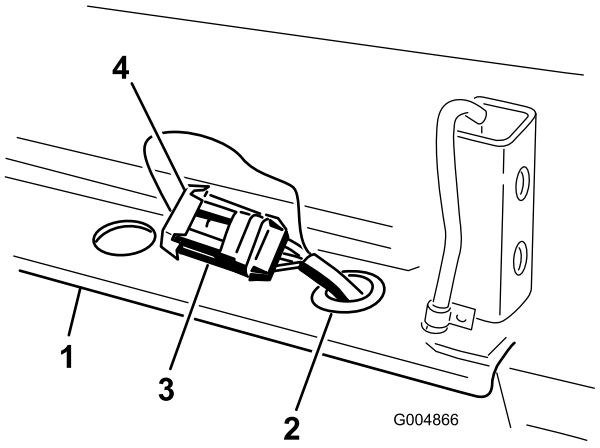

Figure 25

1. Rear frame mount
2. Grommet
3. Harness connector
4. Connector cap

2. Unlatch the control panel cover and lay it to the side (Figure 26).

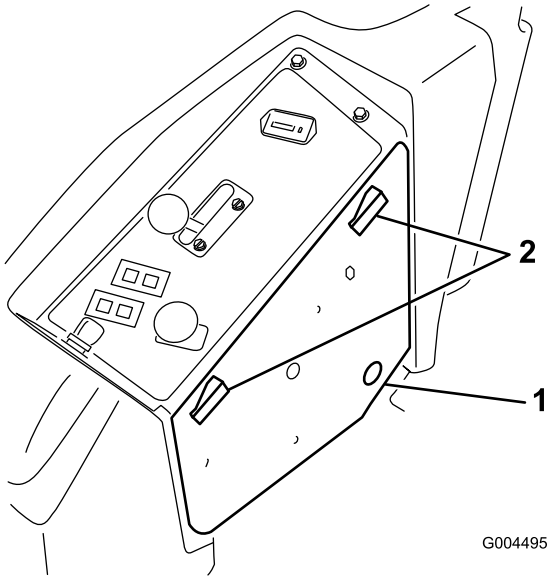

Figure 26

1. Control panel cover
2. Latches

3. From the same end of the harness as the large connector, route the long cab wire (with two connectors), down the ROPS post, under the rear panel frame member and up through the hole in the bottom of the control panel (Figure 27). Secure the long wire to the lower ROPS post with a cable tie.

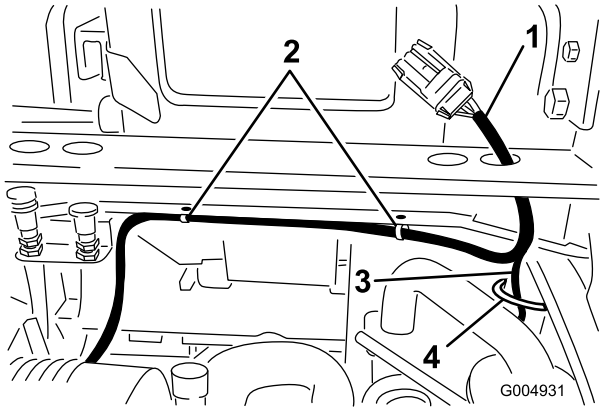

Figure 27

1. Harness
2. Harness wire clips
3. Long cab wire (orange)
4. Cable tie

4. Inside the control panel, locate the pink wire with the connector enclosed in a plastic bubble (Figure 28). Carefully cut off the end of the plastic bubble and plug the appropriate wire connector into it. Close and latch the control panel cover.

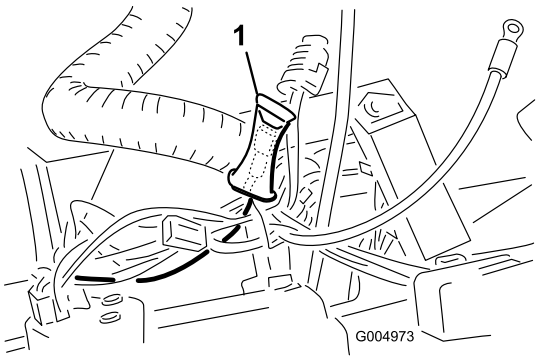

Figure 28

1. Pink wire with plastic bubble (cut off end of plastic bubble)

Note: If an Auxiliary Power Kit is installed on the machine, proceed as follows:

A. Unplug the pink wire from the auxiliary power kit connector.

B. Plug the pink wire connector into the appropriate connector on the new harness.

C. Plug the other harness connector into the auxiliary power kit connector.

5. Route the other end of the harness under the rear frame mount toward the left side of the machine while inserting the harness wire clips into the holes in the underside of the rear frame mount (Figure 28).

Note: Make sure to route the wires away from any hot, rotating or sharp objects. Secure the wires with cable ties.

6. Connect the red harness wire to the fusible link.

7. Insert the fusible link connector through the rubber boot on the positive battery cable.

8. Connect the fusible link to the positive battery post (Figure 29).

9. Connect the black wire to the negative battery post (Figure 29).

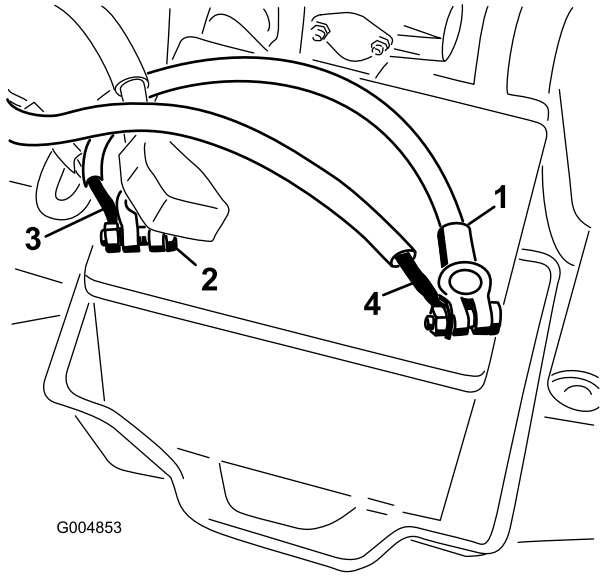

Figure 29

1. Negative battery cable (-)
2. Positive battery cable (+)
3. Fusible link
4. Black wire

10. Secure the wires to the cables with cable ties.

4

Installing the Skid Plate

Parts needed for this procedure:

1	Skid plate
2	Flange-head bolt (3/8 x 1-3/4 inches)
4	Flange nut (3/8 inch)
2	Bolt (3/8 x 1 inch)

Procedure

1. Position a suitable floor jack under the rear bumper tube, raise the rear of the machine and support with jack stands (Figure 30).

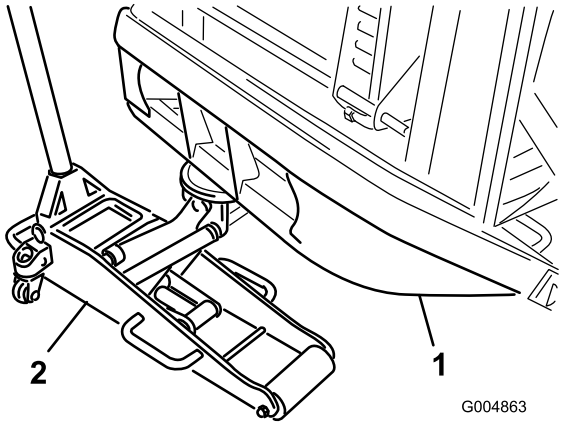

Figure 30

1. Rear bumper tube
2. Floor jack

2. Install the skid plate (Figure 31) to the frame below the engine as follows:

   A. Mount the front of the skid plate to the skid mounting plate with 2 flange-head bolts (3/8 x 1-3/4 inches) and flange nuts (3/8 inch) (Figure 31).

   B. Mount the rear of the skid plate to the frame cross member with 2 bolts (3/8 x 1 inch) and flange nuts (3/8 inch) (Figure 31). Install the rear bolts from the top.

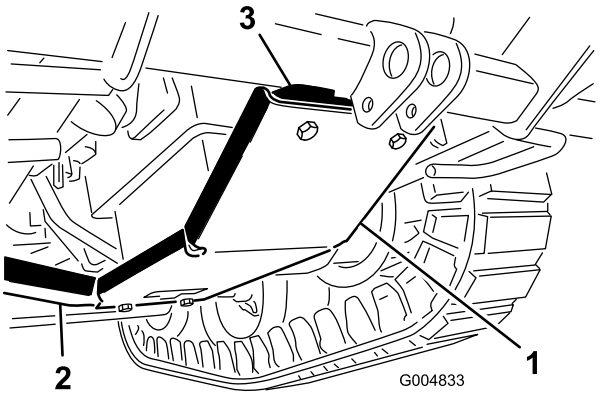

Figure 31

1. Skid plate
2. Frame cross member
3. Skid mounting plate

5

Removing the Mower Deck

Parts needed for this procedure:

2	Vertical tube support assembly
1	Conversion bracket, L.H.
1	Conversion bracket, R.H.
2	Clevis pin
2	Self-tapping screw (1/4 inch)
2	Screw (3/8 x 2–1/4 inch)
2	Flange nut (3/8 inch)
2	Hose plug

Procedure

1. Position a suitable floor jack under the rear bumper tube and raise the rear tires off of the ground (Figure 32).

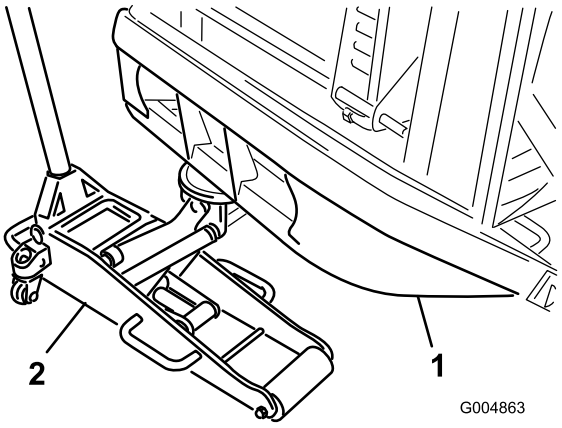

Figure 32

1. Rear bumper tube
2. Floor jack

2. On traction units that have a serial number prior to 312999999, install the vertical tube support assembly to each rear corner of the deck frame with a clevis pin and a 1/4 inch self-tapping screw (Figure 33)

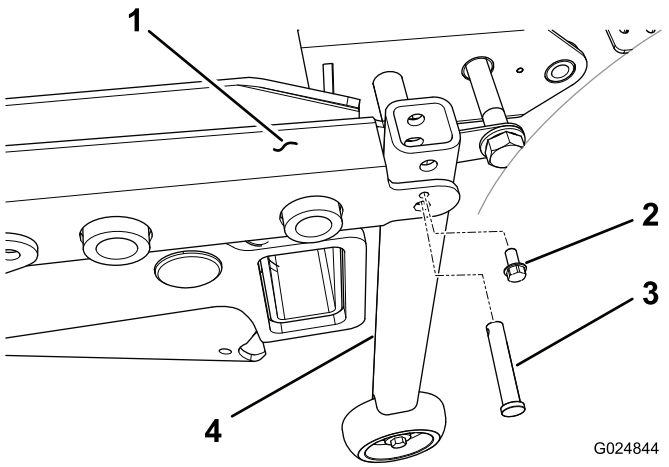

Figure 33

1. Deck frame
2. Self-tapping screw
3. Clevis pin
4. Vertical tube support assembly

3. On traction units that have a serial number greater than 313000001, install a conversion bracket (right or left hand) to the under side of the appropriate rear corner of the deck frame with a 3/8 x 5/8 inch self-tapping screw (Figure 34). The bracket is to point toward the end of the rear frame.

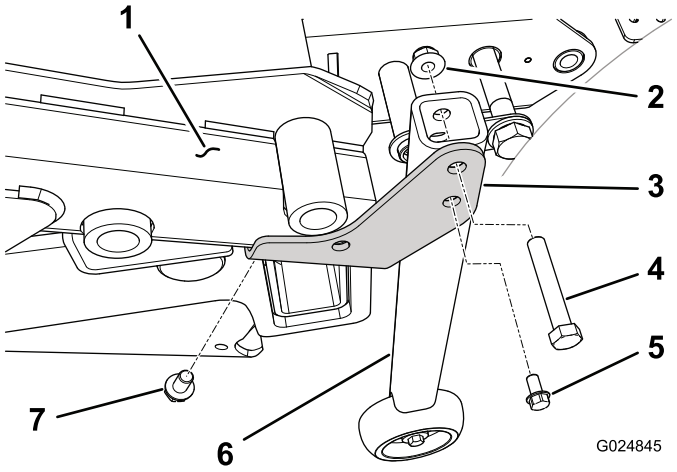

Figure 34

1. Deck frame
2. Flange nut
3. Conversion bracket (left side shown)
4. Screw
5. Self tapping screw
6. Vertical tube support assembly
7.

4. Install the vertical tube support assembly to the conversion bracket (right or left hand) on each corner of the deck frame with a 3/8 x 2–1/4 inch screw and 3/8 inch flange nut (Figure 34).
5. Pivot open the floor plate (Figure 35) and secure with prop rod.

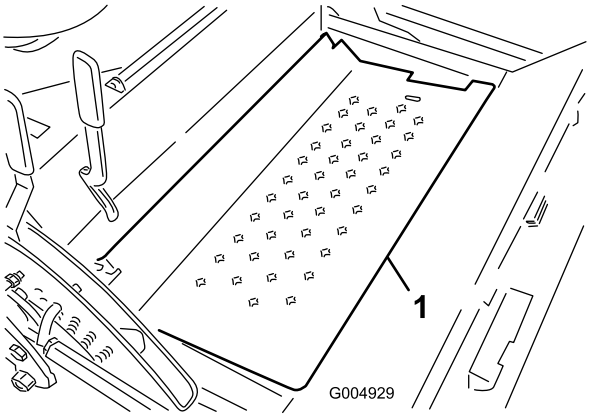

Figure 35

1. Floor plate

6. Loosen the PTO drive shaft bolts and nuts. Remove the roll pin and pull the drive shaft off of the gearbox shaft (Figure 36).

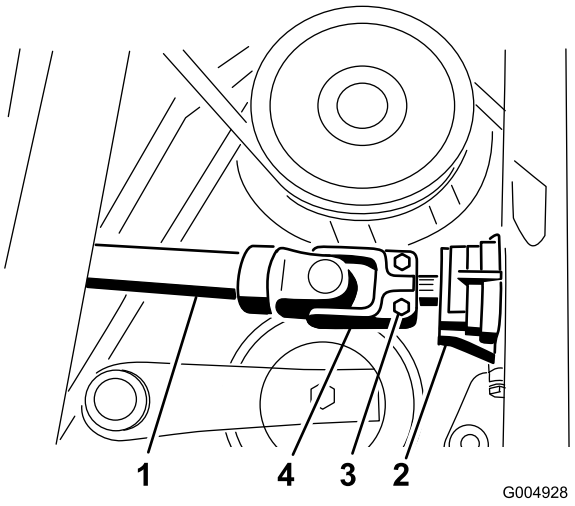

Figure 36

1. Drive shaft
2. Gear box
3. Bolts
4. Roll pin

7. Remove the retaining ring securing the rear of the deck lift cylinder to the pivot pin (Figure 37).

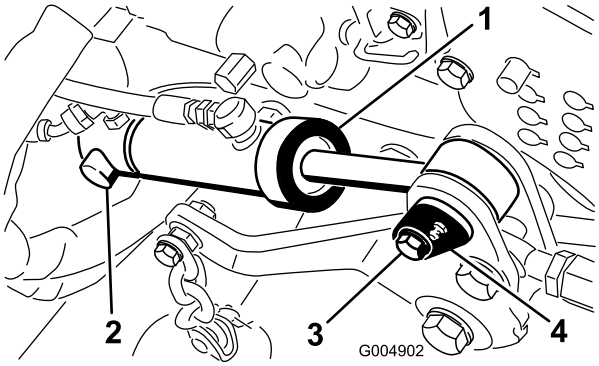

Figure 37

1. Deck lift cylinder
2. Retaining ring
3. Screw
4. Cylinder pin

8. Remove the screw securing the front cylinder pivot pin to the mower frame (Figure 37). Remove the cable tie securing the pressure and tank hoses.
9. Remove the front pivot pin and slide the cylinder off the rear pin Figure 37 Let the cylinder hang out of the way on the hoses (Figure 38).

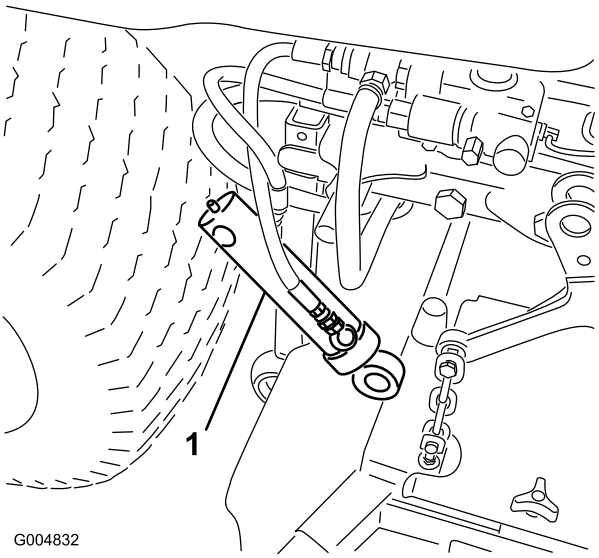

Figure 38

1. Deck lift cylinder

10. Disconnect the tank hose from the control valve (Figure 39). Install the cap from the winter kit valve into the control valve fitting and plug the hose with the plug supplied.

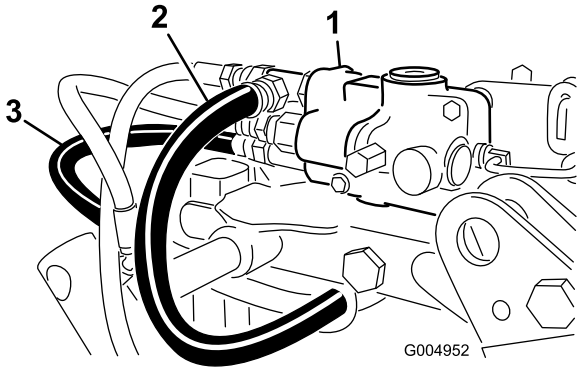

Figure 39

1. Control valve
2. Tank hose
3. Pressure hose

11. Disconnect the pressure hose from the control valve (Figure 39). Install the cap from the winter kit valve into the control valve fitting and plug the hose with the plug supplied.
12. Lower the floor jack until the deck vertical support assemblies are supporting the rear of the deck frame and the rear bumper is lightly supported.
13. Carefully remove the bolts (3/4 inch), washers and nuts that secure the deck frame to the rear frame (3 on the left side and 2 on the right side) (Figure 40).

    Note: Retain 4 of the bolts for re-installation and store the remaining bolts, washers and nuts for the summer change over.

    Note: The floor jack can be raised or lowered to ease removal of the bolts. Lower the floor jack completely once the bolts are removed.

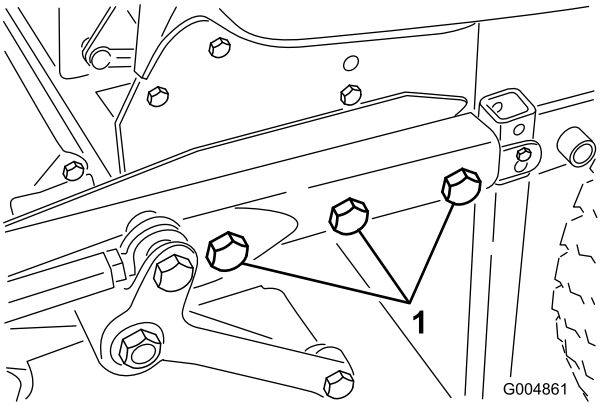

Figure 40

1. 3 mounting bolts (3/4 inch) washers and nuts (Left side)

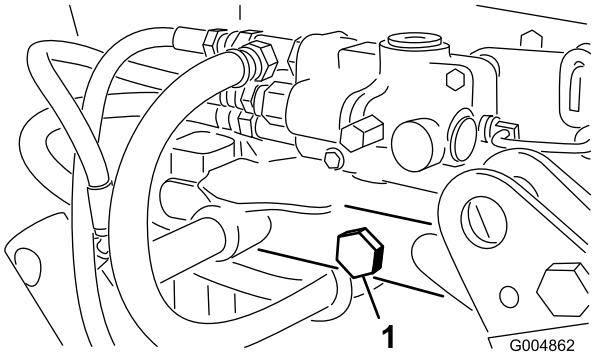

Figure 41

1. Two mounting bolts (3/4 inch), washers and nuts (Right side)

14. Pull mower deck and frame from traction unit and roll forward out of the way.

6

Installing the Winter Frame Assembly

Parts needed for this procedure:

2	Hose cover
4	Cable tie
1	Winter frame assembly
6	Wheel and tire assembly
20	Lug nut
2	Coupler pin
2	Tracks

Procedure

1. Insert a 2 x 4 between the front bogie stop and the frame to tilt the winter frame toward the rear (Figure 42).

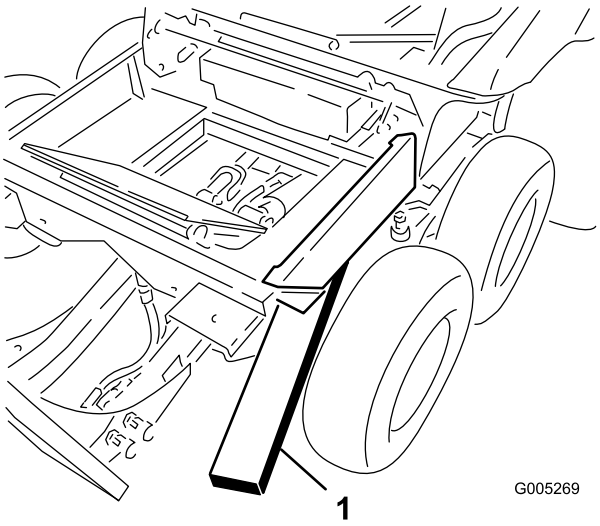

Figure 42

1. 2 x 4

2. On the traction unit, install hose covers onto the loose hydraulic pressure and tank hoses and secure with 2 cable ties each.
3. Loosen the pressure hose fitting at the pump and rotate the fitting 45 degrees toward the front of the machine (Figure 43).

   Note: Figure 43 is shown as viewed from under the traction unit.

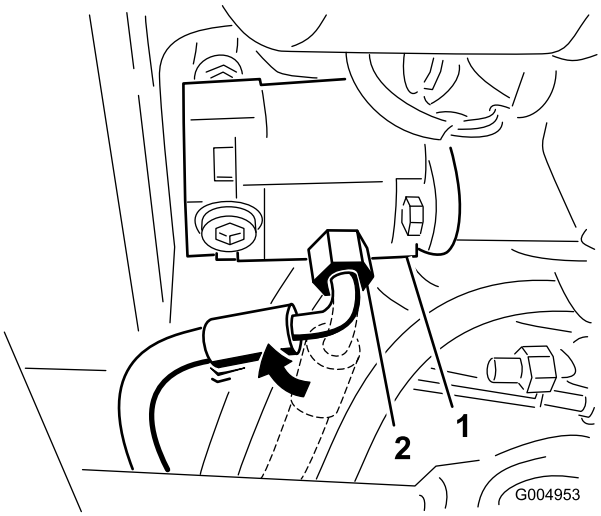

Figure 43

1. Pump
2. Pressure hosed fitting (rotated 45 degrees)

4. Remove the two screws securing the floor plate cover to the floor and remove the plate (Figure 44).

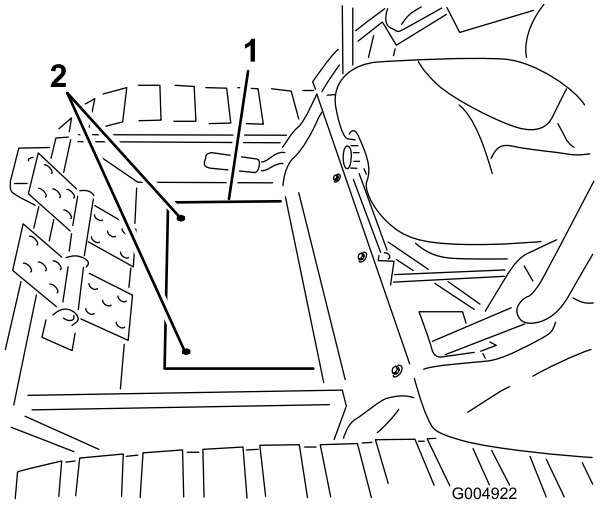

Figure 44

1. Floor plate cover
2. Mounting screws

5. Carefully roll the winter frame assembly into position while routing the drive shaft through the frame tube (Figure 45).

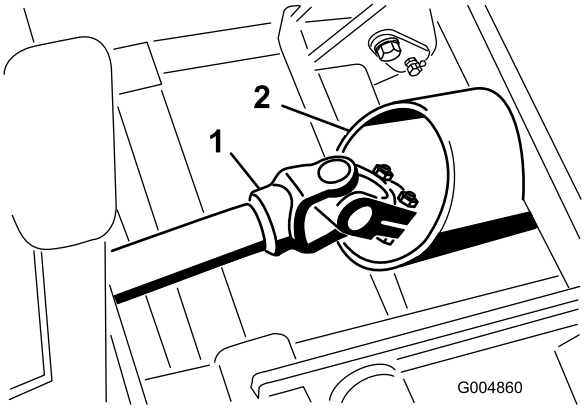

Figure 45

1. Drive shaft
2. Frame tube

6. Route the hoses as follows:
   - Route the pressure hose under the lift cylinder and between the cylinder mounting brackets to the valve (Figure 46).
   - Route the tank hose along side the PTO shaft to the valve (Figure 46).

   Note: To emphasis the hose routing, the hoses are shown without the hose covers installed.

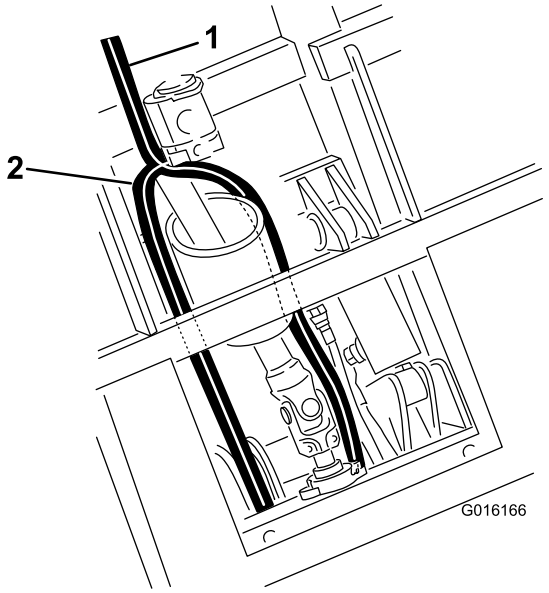

Figure 46

1. Tank hose
2. Pressure hose

7. Connect the drive shaft to the gear box shaft in the winter frame and torque the bolts (5/16 inch) to 20 to 25 N-m (175-225 in-lb). Install the roll pin (Figure 47).

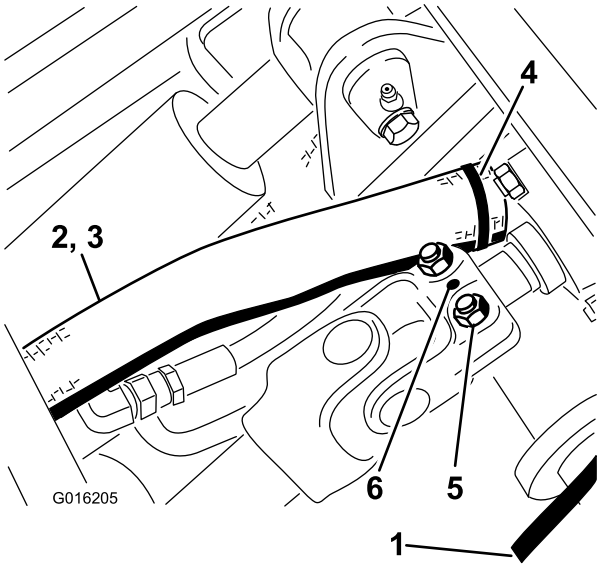

Figure 47

1. Pressure hose
2. Tank hose
3. Hose cover
4. Cable tie
5. Bolts
6. Roll pin

8. With the winter frame against the rear frame, raise the floor jack enough to remove the summer drive tires (Figure 48). Install the winter tires with 2 lug nuts per side.

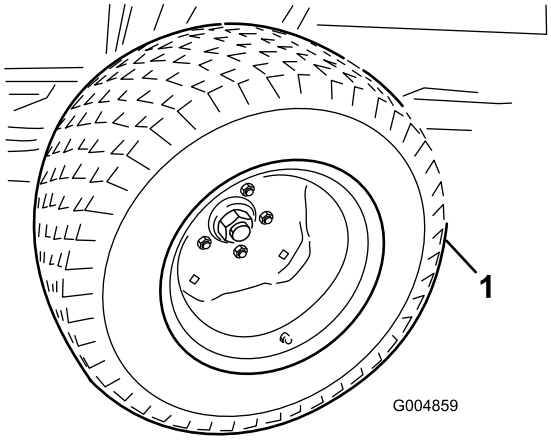

Figure 48

1. Summer drive tire

9. Adjust the floor jack to line up the 1.00 inch holes in the frame and install a coupler pin on each side (Figure 49).

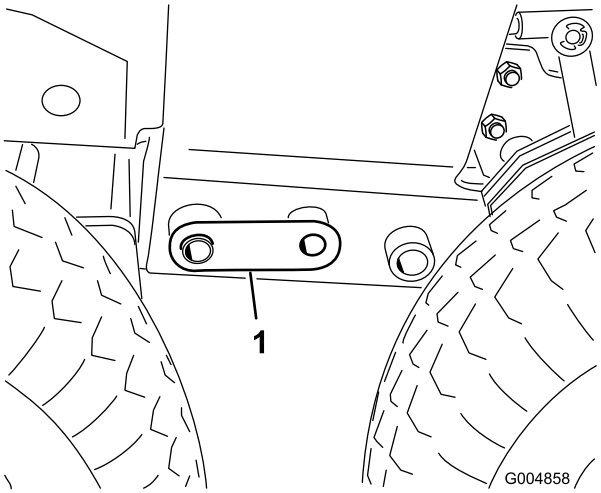

Figure 49

1. Coupler pin

10. Adjust the floor jack as required to install the bolts (3/4 inch) on each side (Figure 50). Torque the bolts to 359 N-m (265 ft-lb).

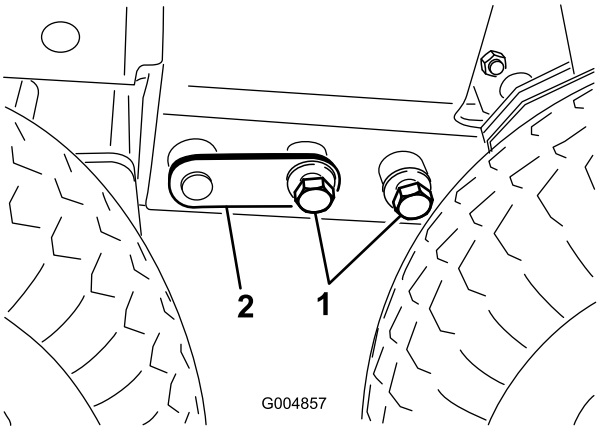

Figure 50

1. 3/4 inch bolts
2. Coupler pin

Note: The rear tires will need to be removed to torque the rear bolts (3/4 inch). After torquing the frame bolts, install the rear tires and torque lug nuts to 88 to 115 N-m (65 to 85 ft-lb).

11. Connect the hydraulic pressure hose to the valve hard line and tank hose to the valve (Figure 51). Retain the hose plugs for the summer change over.

Note: Make sure the hoses are not kinked or are not rubbing against any sharp edges or moving parts.

Note: Adjust the angle of the fittings to accommodate the routing of the hoses.

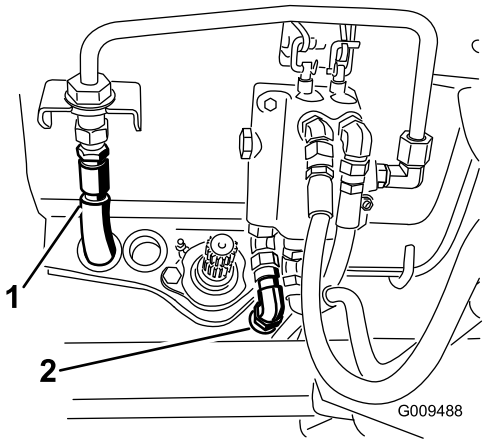

Figure 51

1. Pressure hose
2. Tank hose

12. Raise the rear of the machine until 2 jack stands can be positioned under the rear tube at a height that supports the rear tires 2.5 to 7.5 cm (1 to 3 inches) off of the ground.
13. Lower the floor jack so the rear frame rests on the jack stands. Position the floor jack under the center of the front lift arm pivot tube.
14. Remove the two screws securing each side access cover and remove the covers (Figure 52).

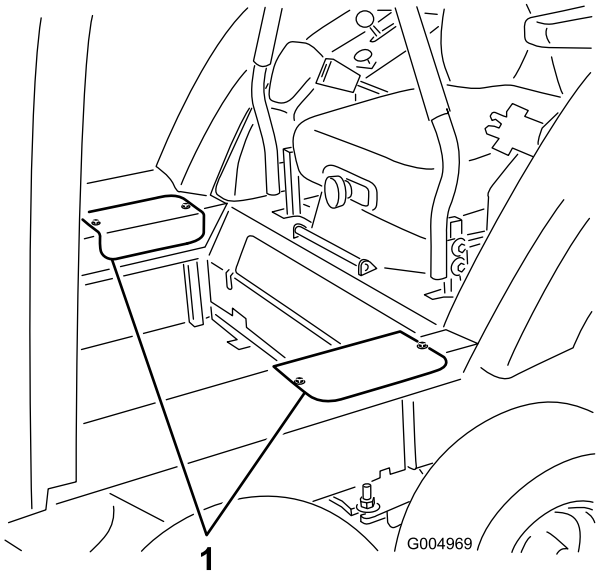

Figure 52

1. Access covers

15. Remove the flat washer (1/2 inch) and nut (1/2 inch) installed on the stud on each bogie pivot (Figure 53).

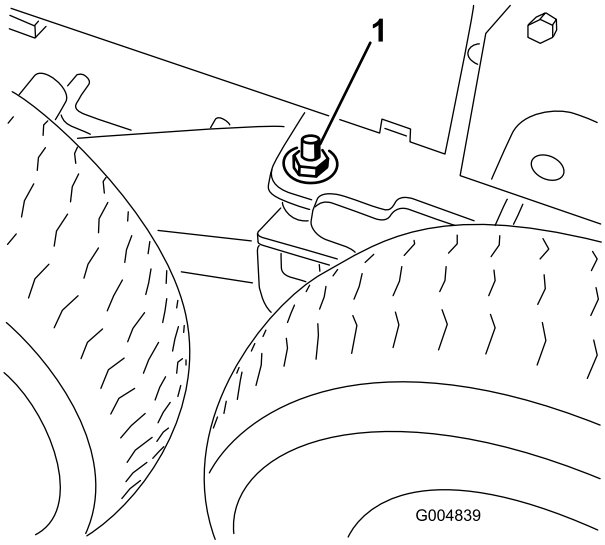

Figure 53

1. Washer & nut on the bogie pivot stud (2)

16. Raise the floor jack until the front tires are off of the ground high enough to install the track beneath them and support the frame with jack stands.

17. Remove the front and center tires from the winter assembly (Figure 54).

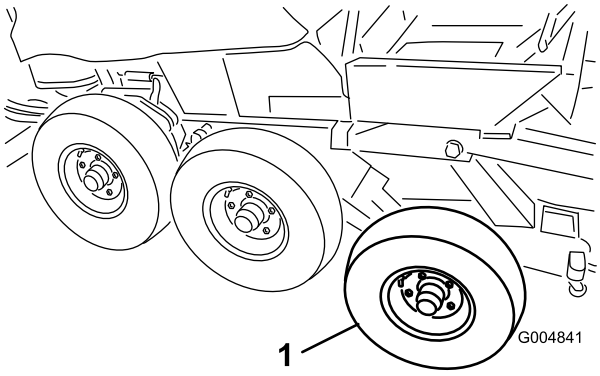

Figure 54

1. Front tire

18. Remove the 2 x 4 from between the frame and the front bogie stop.

19. Carefully lift the tracks over the rear wheel and front hubs. The direction of the track rotation is printed on the track. The V design in the rubber track must point forward.

⚠ CAUTION

The track guides have many pinch points. Carefully grasp the rubber track on the outer edges outboard of the steel guides when moving the track.

20. Adjust the floor jack to a suitable height to install the front tire. With a helper, lift the front of the track enough to carefully install the front tires (Figure 55).

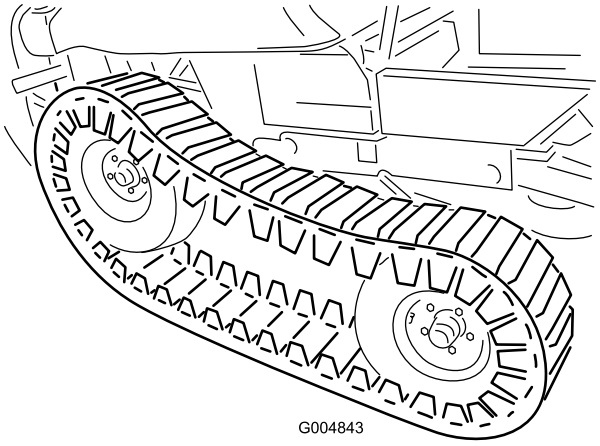

Figure 55

21. Adjust the floor jack to a suitable height to install the center tire. Lift the center of the track enough to install the center tire. Torque the lug nuts to 88 to 115 N-m (65 to 85 ft-lb).

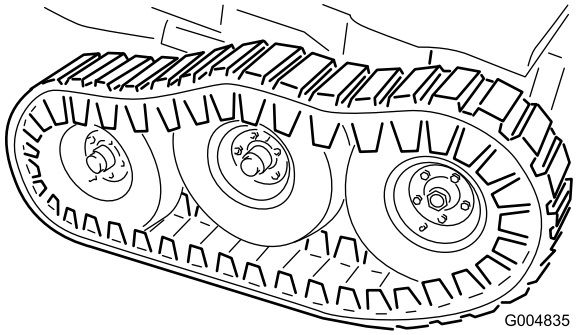

Figure 56

22. Lower the floor jack until the front wheels support the frame. Install the flat washers (1/2 inch) and locknuts on the bogie pivot stud (Figure 56) and torque to 102 N-m (75 ft-lb).

    Note: You may need to move the floor jack to the rear bumper to raise the rear of the machine high enough to install the flat washer and locknut.

23. Re-install the side access covers with the screws previously removed (Figure 57).

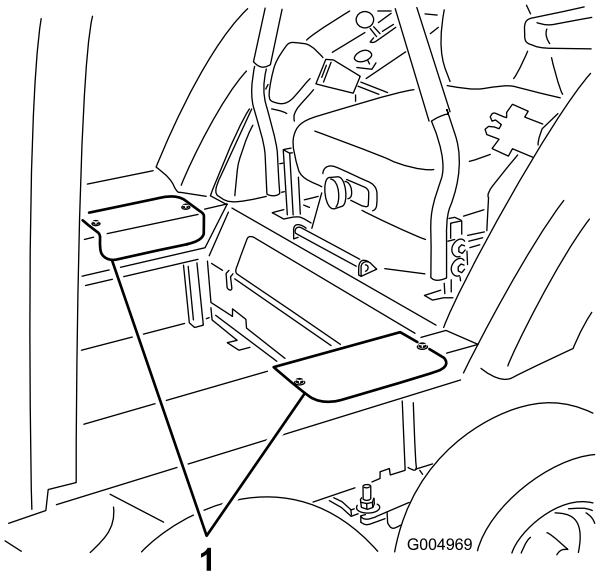

Figure 57

1. Access covers

7

Installing the Cab Mount Supports

Parts needed for this procedure:

2	Cab mount support (supplied with cab model 30371)
2	Bolt (1/2 x 3–1/2 inches) (supplied with cab model 30371)
2	Nut (1/2 inch) (supplied with cab model 30371)
2	Bolt (3/4 x 3–1/2 inches) (supplied with cab model 30371)
2	Lockwasher (3/4 inch) (supplied with cab model 30371)
2	Nut (3/4 inch) (supplied with cab model 30371)

Procedure

1. Remove the bolt, nut, hair pin cotter and pin securing each ROPS assembly to the ROPS posts (Figure 58). Remove the ROPS assembly.

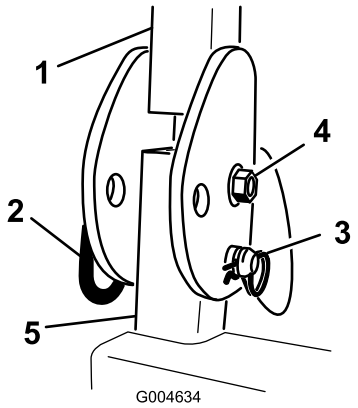

Figure 58

1. ROPS
2. Pin
3. Cotter pin
4. Bolt & nut
5. ROPS post

2. Loosely install a cab mount support to each ROPS post with two bolts (1/2 x 3–1/2 inches), two nuts (1/2 inch), two bolts (3/4 x 3–1/2 inch) and two nuts (3/4 inch) (Figure 59). Make sure the top plate hole is positioned forward. Do not tighten bolts at this time.

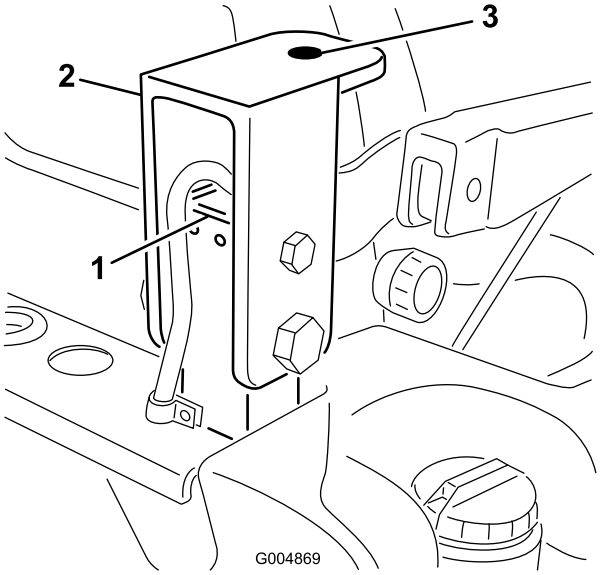

Figure 59

1. ROPS post
2. Cab mount support
3. Top plate hole

8

Re-installing the Panels

Parts needed for this procedure:

2	Corner mat (supplied with cab model 30371)
2	Seal

Procedure

1. Place the rear panel into position and align the top mounting holes with the holes in the frame cross member (Figure 60). Secure the top of the panel to the cross member with 3 screws previously removed.

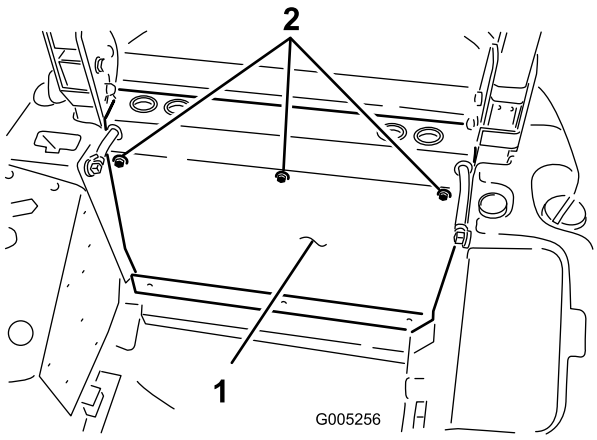

Figure 60

1. Rear panel
2. Screws (3)

2. Align the corner mat mounting holes with the bottom holes in the rear panel and the lower frame cross member holes (Figure 61). Secure the corner mats to the rear panel and cross member with 2 rear panel mounting screws previously removed. Use the remaining screw to secure the bottom middle of the rear panel to the cross member.

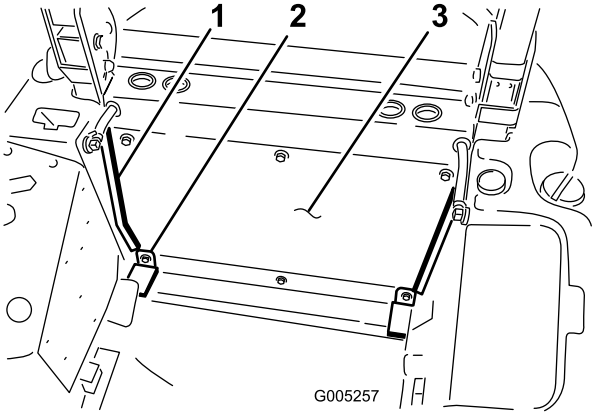

Figure 61

1. Seal (2)
2. Corner mat (2)
3. Rear panel

3. Clean the right and left edges of the rear panel. Make sure all grease and/or oil is removed from the panel to assure proper adhesion.
4. Remove the backing and affix the self-adhesive seals to each edge of the rear panel (Figure 61). Make sure each seal butts up against the fuel tank side panels.
5. Install the floor plate cover (Figure 62) and the front cover (Figure 63).

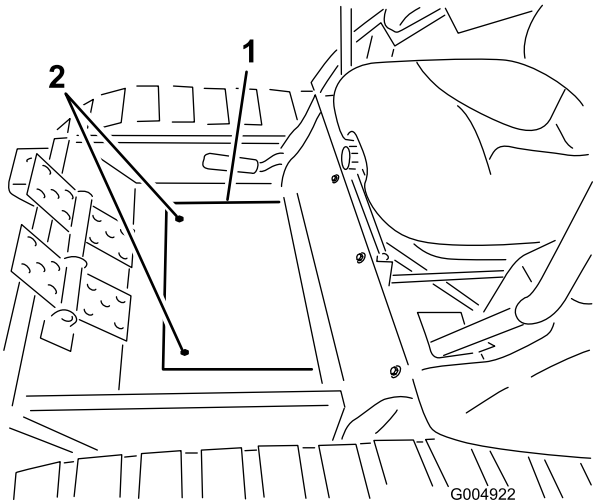

Figure 62

1. Floor plate cover
2. Mounting screws

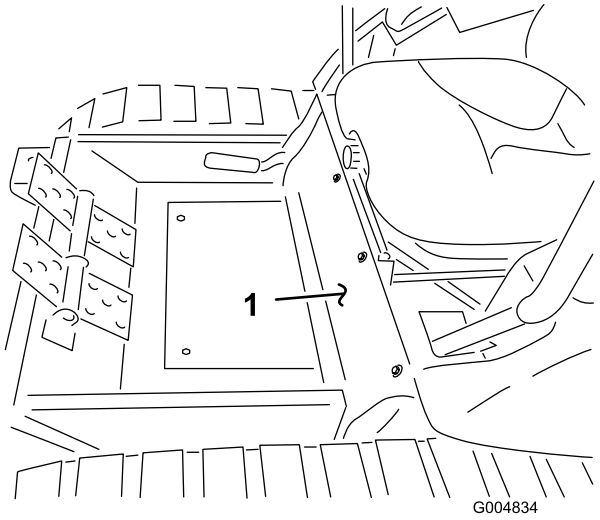

Figure 63

1. Front cover

9

Mounting the Cab

Parts needed for this procedure:

4	Rubber cab mount (supplied with cab model 30371)
4	Bolt (1/2 x 3 inches) (supplied with cab model 30371)
4	Washer-Steel (1/2 x 2–1/2 inches) (supplied with cab model 30371)
4	Washer-rubber (1/2 x 2–1/2 inches) (supplied with cab model 30371)
4	Nut (1/2 inch) (supplied with cab model 30371)
2	Corner mat (supplied with cab model 30371)
1	Power Point Shield

Procedure

1. Remove the clip securing the door closer socket to the door bracket ball (Figure 64).

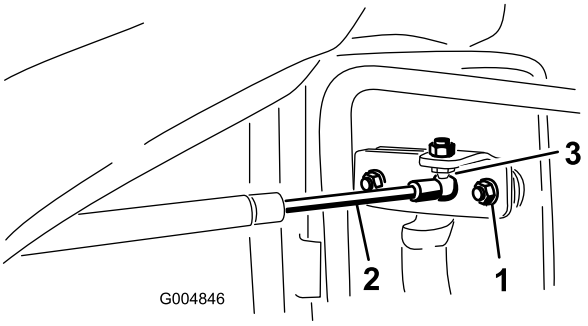

Figure 64

1. Cab door bracket
2. Door closer
3. Clip

Note: The cab doors and windows may be removed to ease installation, decrease the lifting weight and to prevent possible damage.

2. Remove the fasteners securing the cab to the shipping pallet.
3. Insert a rubber cab mount at the front and rear mounting locations (Figure 65).
4. Using a suitable overhead hoist, carefully lift the cab into position on the machine. Use caution not to damage cab roof, controls, hoses or electrical connectors.
5. At each mounting point, secure the cab to the machine with a bolt (1/2 x 3 inches), steel washer (1/2 x 2–1/2 inches), rubber washer (1/2 x 2–1/2 inches) and nut (1/2 inch) (Figure 65). Tighten the bolts until the rubber mounts are compressed to a thickness of 2.2 cm (7/8 inch).

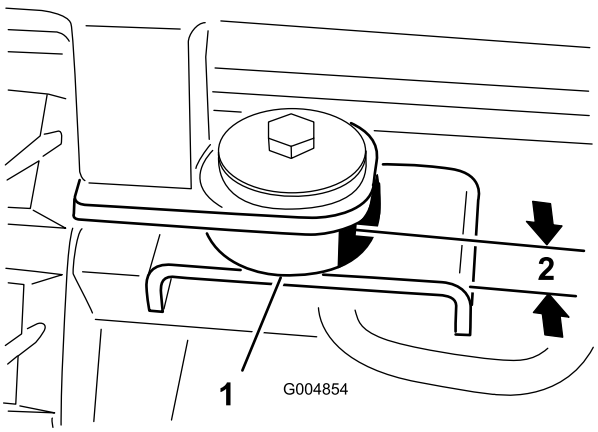

Figure 65

1. Rubber mount
2. 0.875 inch (2.2 cm)

6. Remove the bolt securing the power point assembly to the right front corner of the cab frame (Figure 66).

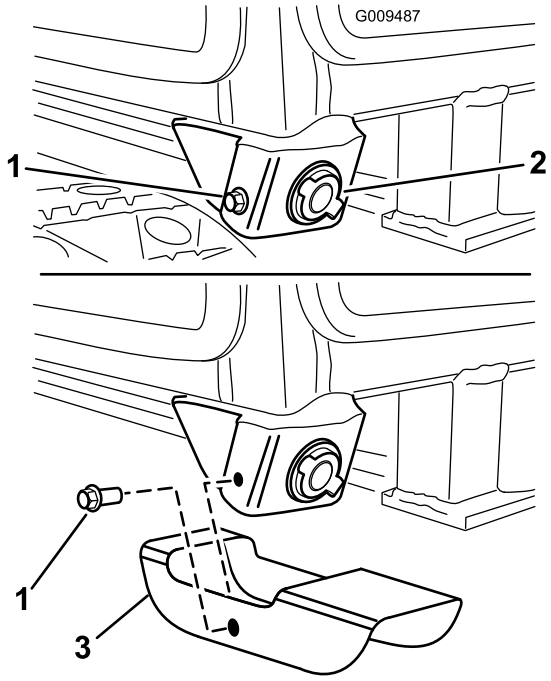

Figure 66

1. Bolt
2. Power point assembly
3. Power point shield

7. Slide the power point shield up over power point while aligning the shield hole with the hole in the power point assembly plate (Figure 66). The longer end of the shield is to point forward to protect the power point.
8. Secure the shield to the cab with the bolt previously removed.

10

Making the Final Connections and Checking the Operation

No Parts Required

Procedure

1. Tighten the bolts and nuts securing the cab mount supports to the ROPS posts.
2. Connect the cab pressure and return heater hoses to the quick couplers on the rear frame mount (Figure 67).

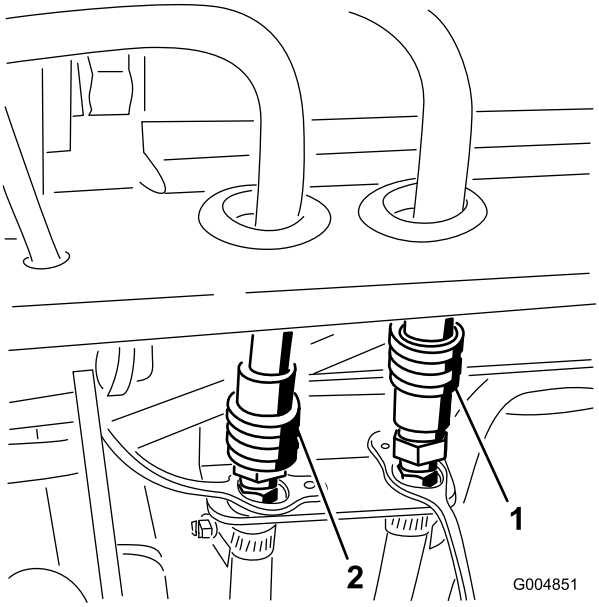

Figure 67

1. Return hose
2. Pressure hose

3. Remove the cap and plug the cab wire harness connector into the harness on the rear frame mount (Figure 68).

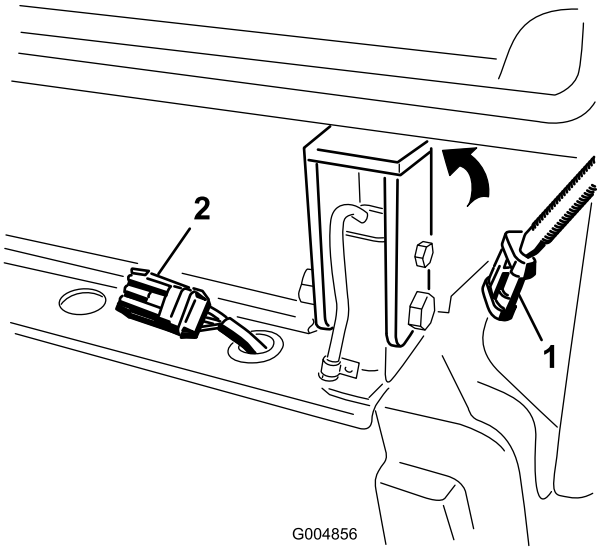

Figure 68

1. Cab wire harness connector
2. Harness connector on the rear frame mount

4. Reinstall the back panel to the cab.

   Note: Reinstall the doors and windows (if removed) and secure door closer to the cab door bracket.
5. Fill the radiator. Refer to the *Operator's Manual* for fluid specifications.
6. Check the hydraulic fluid level and replenish as required. Refer to the *Operator's Manual* for fluid specifications.

7. Start the machine. Run the lift arm up and down and check for hydraulic leaks. Check the hydraulic fluid and radiator levels and replenish as required.

11

Reading the Manuals

Parts needed for this procedure:

1	*Operator's Manual*
1	*Parts Catalog*
1	Pre-delivery Inspection Sheet
1	Certificate of Quality
1	Jacking tube
2	Jacking tube bolts
1	Eyelet
1	Spacer
1	Flange nut (1/4 inch)

Procedure

1. Read the manuals.
2. Store the documentation in a safe place.
3. Use the jacking tube and jacking tube bolts for seasonal conversion.
4. Mount the eyelet to the cab when using a snowthrower attachment.

Product Overview

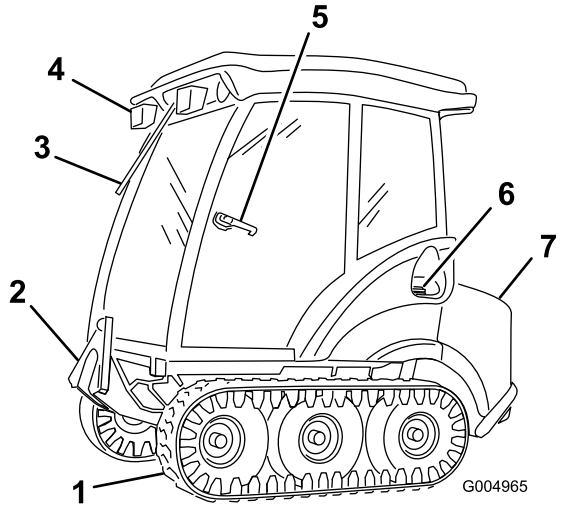

Figure 69

1. Track
2. Front lift arm
3. Windshield wiper
4. Work lights
5. Door latch
6. Fuel tank cap
7. Hood

Controls

Become familiar with all the controls before you start the engine and operate the machine.

Refer to the manual supplied with the cab for operating instructions.

Operation

Note: Determine the left and right sides of the machine from the normal operating position.

Think Safety First

Please read all safety instructions and symbols in the safety section. Knowing this information could help you or bystanders avoid injury.

⚠ DANGER

Operating on wet grass, ice or slippery steep slopes can cause sliding and loss of control.

Tracks dropping over edges can cause roll overs, which may result in serious injury, death or drowning.

Read and follow the rollover protection instructions and warnings.

To avoid loss of control and possibility of rollover:

- **Do not operate near drop-offs or near water.**
- **Reduce speed and use extreme caution on slopes.**
- **Avoid sudden turns or rapid speed changes. Always use seat belts**

⚠ CAUTION

This machine produces sound levels in excess of 85 dBA at the operators ear and can cause hearing loss through extended periods of exposure.

Wear hearing protection when operating this machine.

The use of protective equipment for eyes, ears, feet and head is recommended.

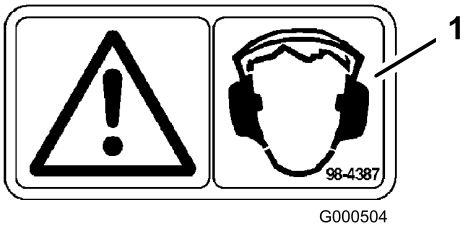

Figure 70

1. Warning— wear hearing protection

Attachments

Read the *Operator's Manual* supplied with the attachment before operating.

Make sure hydraulic quick couplers are free of any contaminates before connecting.

Keep output shaft oiled to prevent rust.

Never operate the PTO with attachment in the raised position. Noise from the PTO drive line will be evident.

Install the attachment as follows:

- Remove any attachment from the machine.
- Drive the machine into position behind the attachment adapter. Raise the machine adapter into the attachment adapter.
- Secure the adapters together with the attachment pin and hairpin cotter as shown in Figure 71.

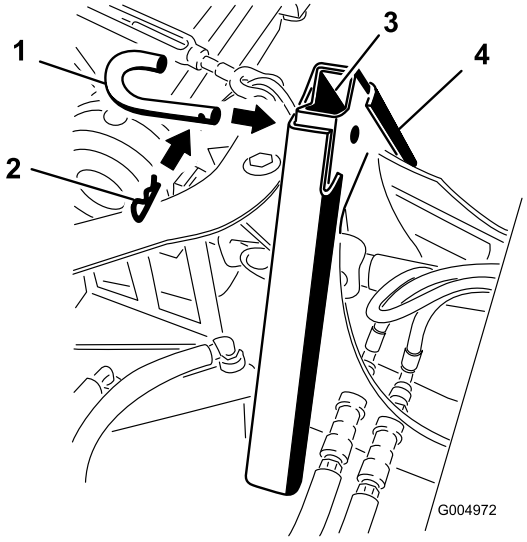

Figure 71

1. Attachment pin
2. Cotter pin

Snowthrower Wire Eyelet

If mounting a snowthrower attachment, install the wiring eyelet as follows:

1. Locate, mark and drill a .281 inch diameter hole in the front wall of the cab as shown in Figure 72. The hole is to be located approximately in the center of the cab wall (side to side and up and down)

   Note: Hole may already be present in the front wall of the cab.

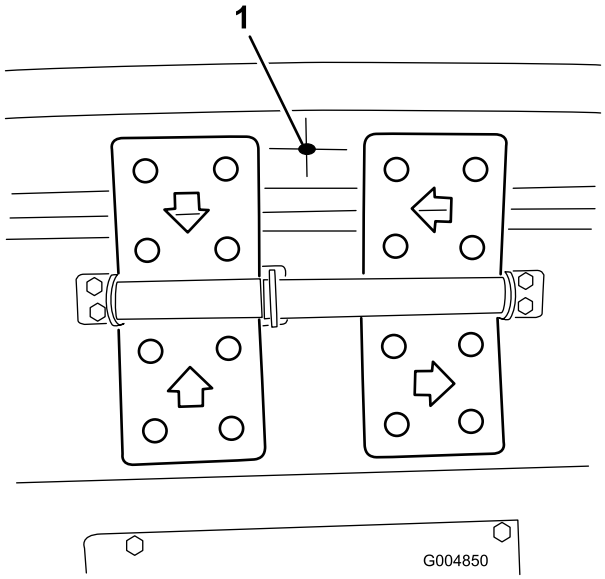

Figure 72

1. .281 inch diameter hole location (Between pedals)

2. From the front of the cab, install the eyelet and spacer to the cab wall with a flange nut (Figure 73).

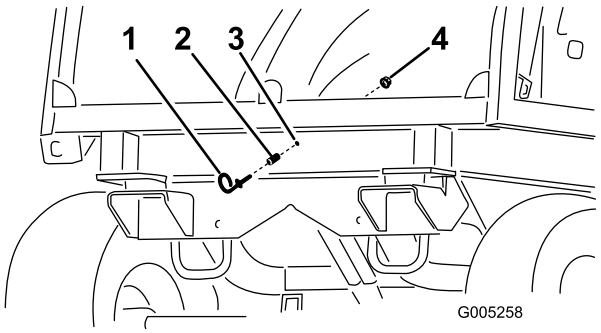

Figure 73

1. Eyelet
2. Spacer
3. Hole in cab wall
4. Flange nut

3. Route the snowthrower wires from the cab, thru the eyelet and to the snowthrower.

Winter to Summer Conversion

1. Start the machine and remove any attachments. Position the machine so the winter frame can be rolled away and replaced with the summer frame and the rear of the machine can be raised with a floor jack. (Cab door and side window can be removed if space is limited). Store the attachment per the instructions in the manufacturers *Operator's Manual*.
2. Make sure the lift arm A-frame is lowered all the way.
3. Remove the two capscrews securing the floor plate cover and remove the cover (Figure 74).

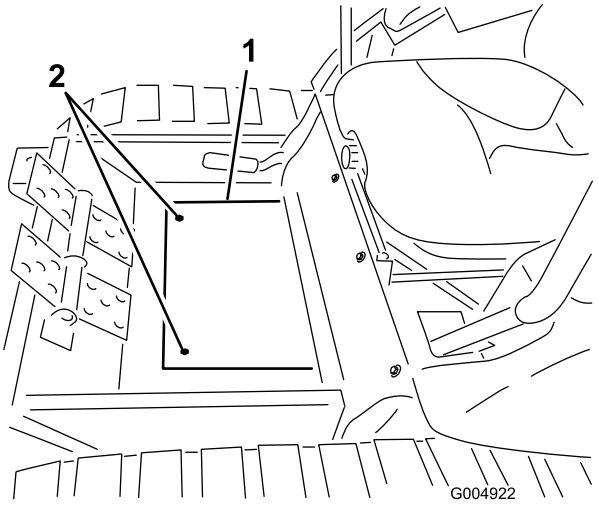

Figure 74

1. Floor plate cover
2. Mounting screws

4. Remove the roll pin and loosen the two capscrews securing the drive shaft to the gearbox shaft (Figure 75). Slide the drive shaft off the gearbox shaft.

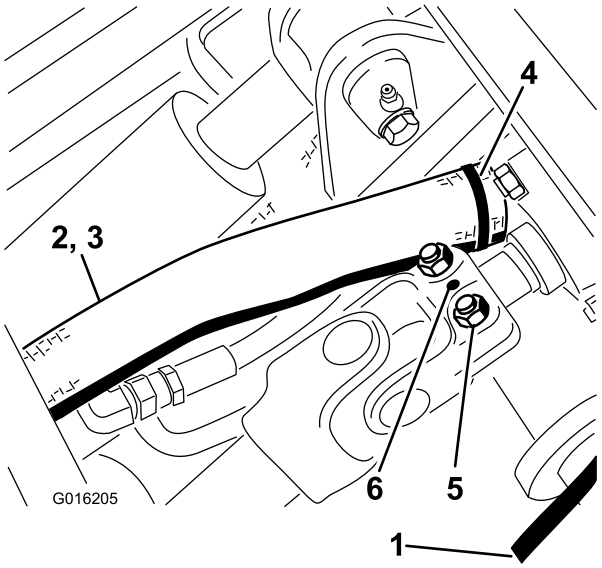

Figure 75

1. Pressure hose
2. Tank hose
3. Hose cover
4. Cable tie
5. Bolts
6. Roll pin

5. Position two jack stands under the rear bumper tube at a height so that they contact or nearly contact the bumper.
6. Remove the two screws securing each side access cover and remove the covers (Figure 76).

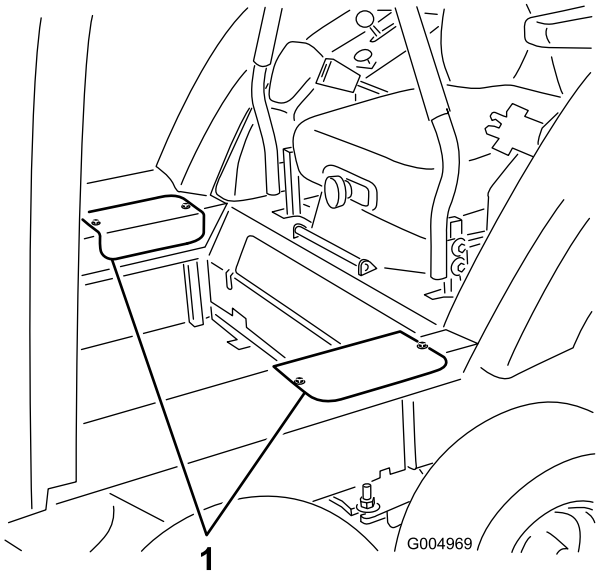

Figure 76

1. Access covers

7. Remove the 1/2 inch locknut and flat washer from the left and right bogie pivot weldment to unlatch the pivot (Figure 77).

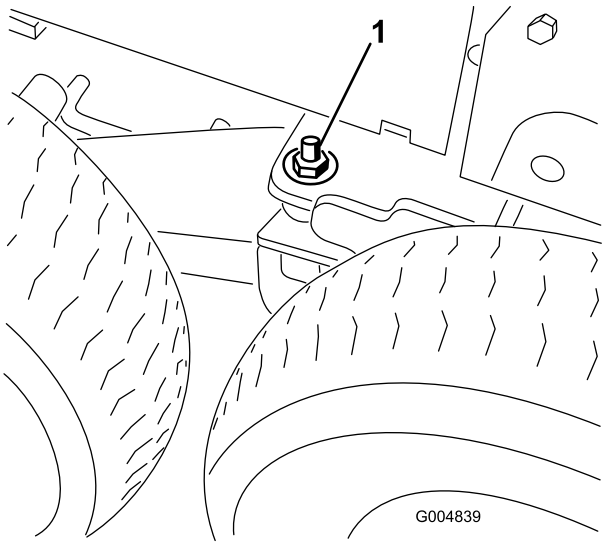

Figure 77

1. Washer & nut on the bogie pivot stud

8. Position a suitable floor jack under the center of the front lift arm pivot tube.
9. Raise the floor jack until the rear of the machine is supported on the jack stands and the center tire swings back and nearly contacts the rear tire.
10. Remove the center and rear wheels from each side.
11. Lower the floor jack until the bogie pivot weldment moves enough so that the 1/2 inch flat washer and locknut can be installed on the stud and threaded finger tight on both sides of the machine (Figure 77).
12. Raise the floor jack high enough so that the track can be slid off of the front tire.

⚠ CAUTION

The track guides have many pinch points. Carefully grasp the rubber track on the outer edges outboard of the steel guides when moving the track.

13. Repeat the procedure on the other side of the machine. Move the tracks away from the machine.
14. Place an additional jack stand under front of machine. Place a drain pan under the control valve.
15. Disconnect the tank hose from the control valve hard line (Figure 78). Cap the hose and fitting. Pull the tank hose back toward the rear of the frame.

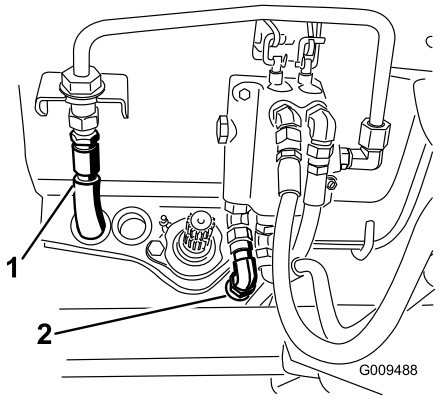

Figure 78

1. Pressure hose
2. Tank hose

16. Disconnect the pressure hose from the control valve (Figure 78). Cap the hose and fitting. Pull the hose back toward the rear of the frame.
17. Unplug the cab harness connector (Figure 79) and install the cap onto the connector.

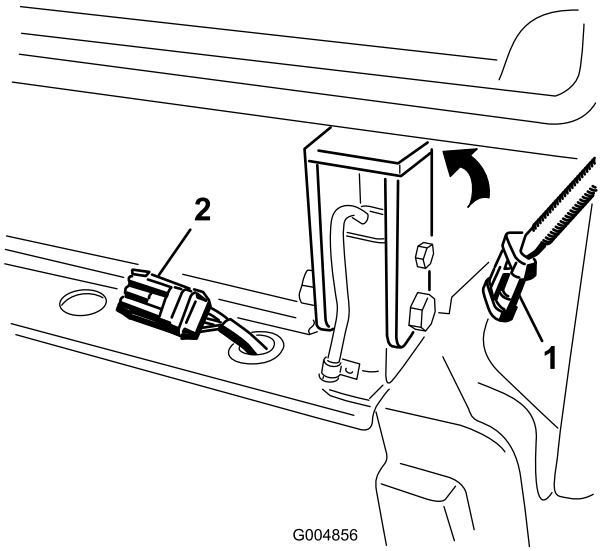

Figure 79

1. Cab wire harness connector
2. Harness connector on the rear frame mount

18. Disconnect the pressure and return quick coupler hoses from the cab (Figure 80). Plug the couplers into each other to keep clean. Install the cap and dust covers onto the quick couplers on the machine. Make sure all connectors are clean before making connections.

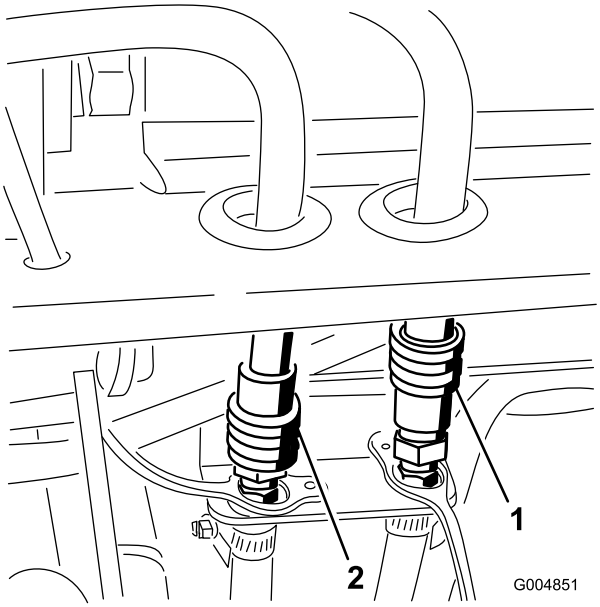

Figure 80

1. Pressure hose
2. Return hose

19. Remove the (2) 3/4 inch diameter bolts that attach the front frame to the rear frame ahead of the drive tire from each side of the frame (Figure 81). DO NOT REMOVE THE COUPLER PIN AT THIS TIME.

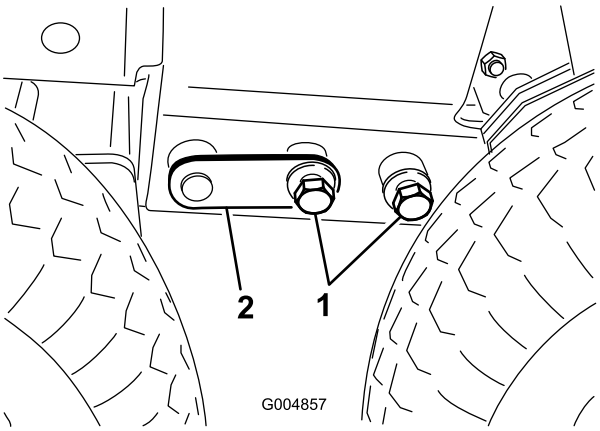

Figure 81

1. 3/4 inch bolts
2. Coupler pin

20. Install the summer drive tires with two nuts per tire (Figure 82).

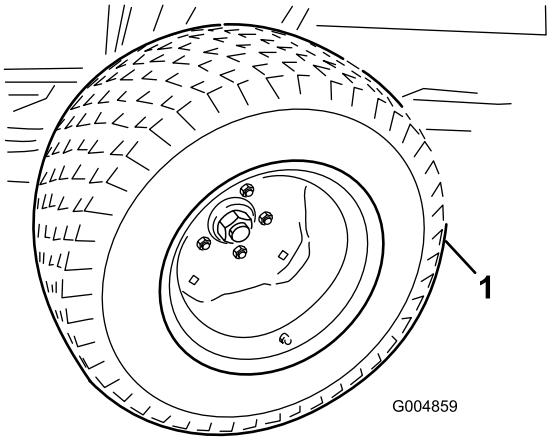

Figure 82

1. Summer drive tire

21. Install the center tires on the winter frame.
22. Install the cab jack tube into the cutouts in the cab floor (Figure 83). Tighten the jacking bolts until the tapered ends go through the hole in the floor plate and just contact the frame.

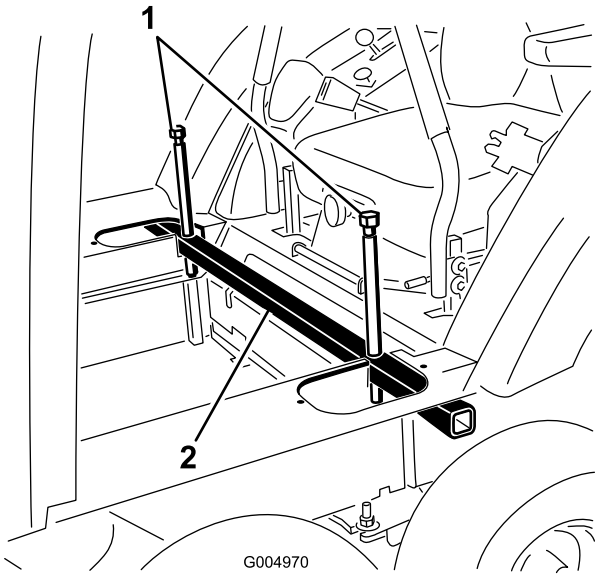

Figure 83

1. Jacking bolts
2. Cab jack tube

23. Remove the front jack stand and lower the front of the machine onto the tires.
24. Move the floor jack to the rear of the machine and lightly support the rear of the machine at the rear bumper.
25. Remove the bolts and nuts securing rear cab mounts to the ROPS posts (Figure 84). Adjust the floor jack if the bolts are binding and difficult to remove.

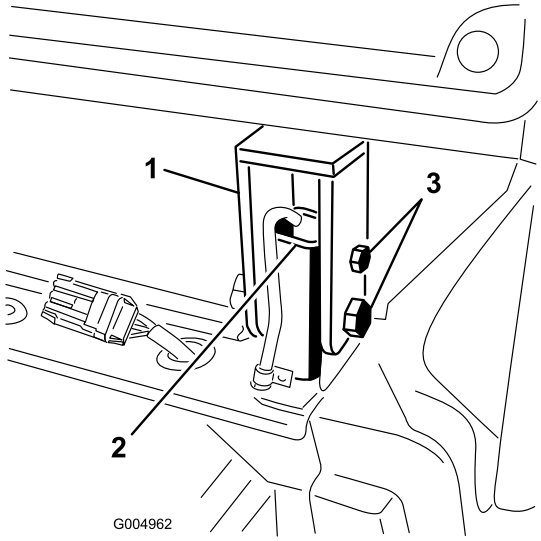

Figure 84

1. Cab mount
2. ROPS post
3. Bolts & nuts
4. ROPS post

26. Loosen the two front cab mounting bolts so the cab can pivot freely.
27. Raise the rear of the cab high enough to clear the back of the seat by slowly and evenly tightening the jacking bolts (Figure 85) on each side of the cab jack tube a little at a time. Alternate frequently from side to side so that the bolts support the cab evenly and stay in position in the holes in the floor plate.

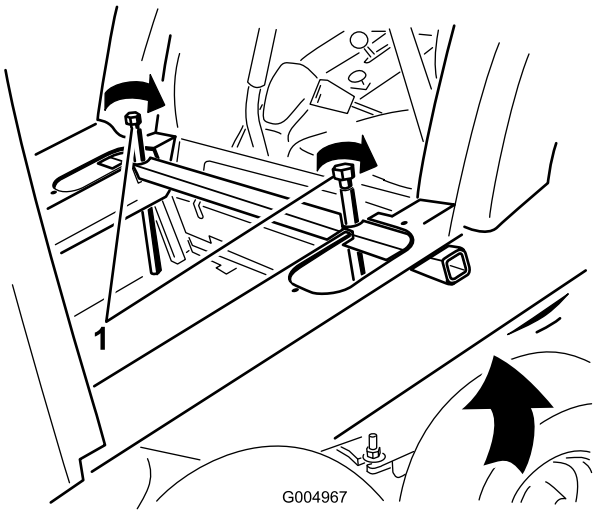

Figure 85

1. Jacking bolts

28. Remove the front jack stand and lower the front of the machine onto the tires until the coupler pins (Figure 86) are loose enough to be removed.

Note: If the pins are tight, rotate the pins while pulling.

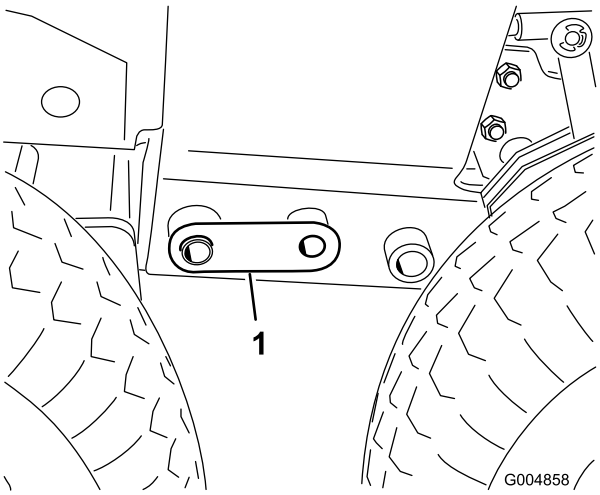

Figure 86

1. Coupler pin

29. Carefully roll the front frame away from the rear frame making sure that the hydraulic hoses and drive shaft are not hanging up. Make sure the rear of the cab clears the seat and control handles. Adjust the position of the floor jack if necessary to gain clearance between the seat and the rear of the cab.
30. Loosen the pressure hose fitting at the pump and rotate the fitting 45 degrees toward the rear of the machine (Figure 87).

Note: Figure 87 is shown as viewed from under the traction unit.

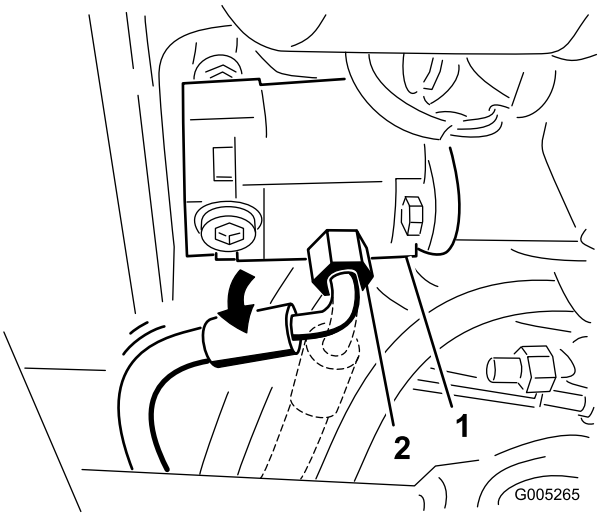

Figure 87

1. Pump
2. Pressure hosed fitting (rotated 45 degrees)

31. Roll the summer deck and frame into position and install the five 3/4 inch bolts, washers and nuts that connect the deck frame to the rear frame (Figure 88). Remove the lift cylinder pins and rear drive tires (if required) to gain access to the bolts on the right hand side. Torque the bolts to 265 foot pounds.

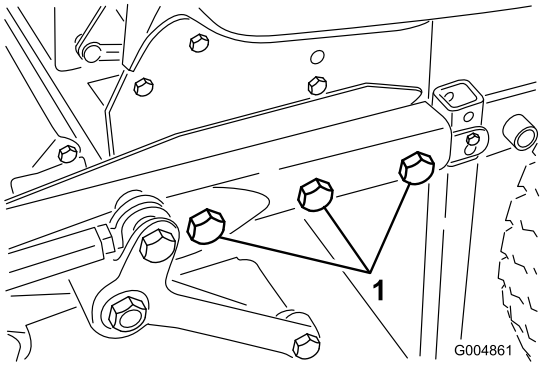

Figure 88

1. 3 mounting bolts (3/4 inch), washers and nuts (Left side)

32. Remove the fasteners securing the vertical tube support assemblies to the rear of the deck frame or the conversion brackets. Also, remove the conversion brackets from the deck frame, if applicable.

33. Pivot open the floor plate (Figure 89).

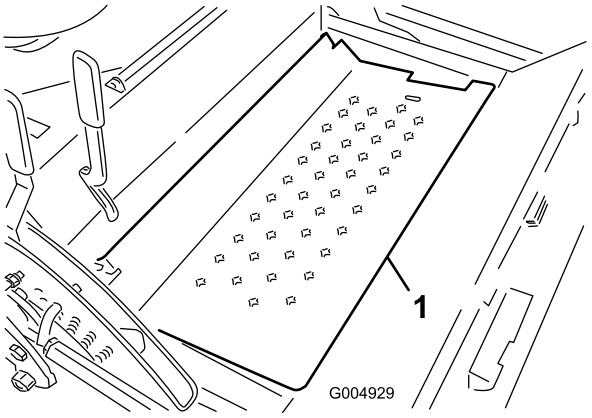

Figure 89

1. Floor plate

34. Slide the drive shaft onto the gearbox shaft (Figure 90). Install the roll pin and torque the bolts to 175-225 in-lb (20 to 25 N-m) .

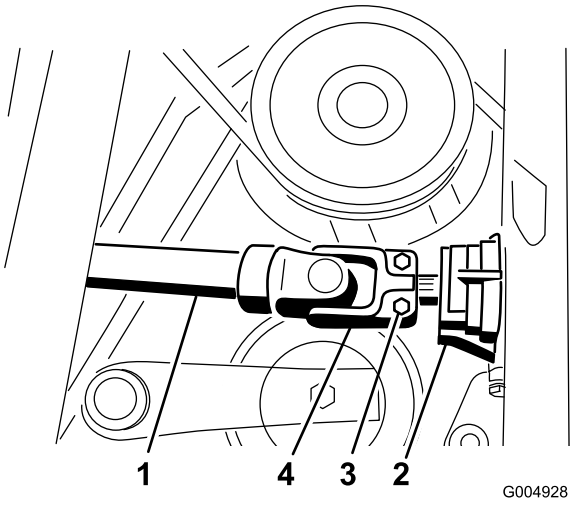

Figure 90

1. Drive shaft
2. Gear box
3. Bolt
4. Roll pin

35. Route and connect the hydraulic pressure and tank hoses to the valve (Figure 91).

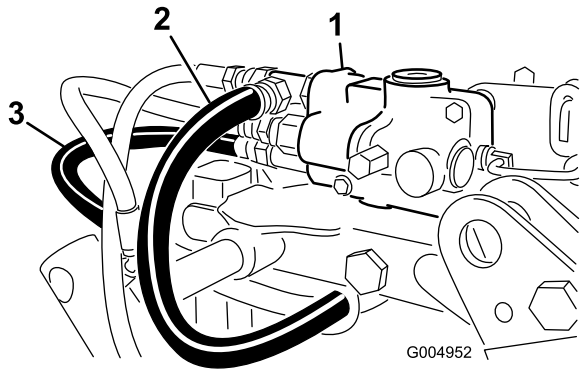

Figure 91

1. Control valve
2. Tank hose
3. Pressure hose

36. Install the rear of the deck lift cylinder onto the pivot pin and secure with the retaining ring (Figure 92).
37. Secure the front of the lift cylinder to the mower frame with the cylinder pin and screw (Figure 92).

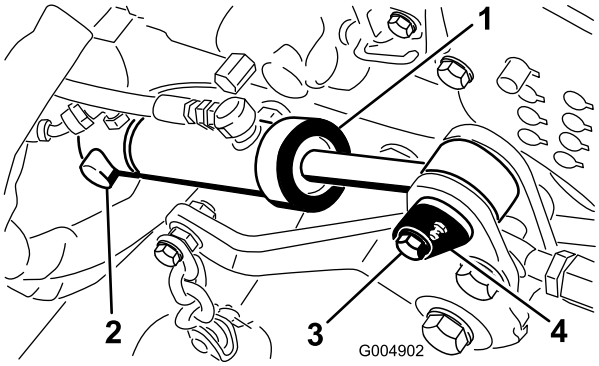

Figure 92

1. Deck lift cylinder
2. Retaining ring
3. Screw
4. Cylinder pin & screw

38. Remove the bolts and nuts securing the cab mount supports to the ROPS posts (Figure 93).

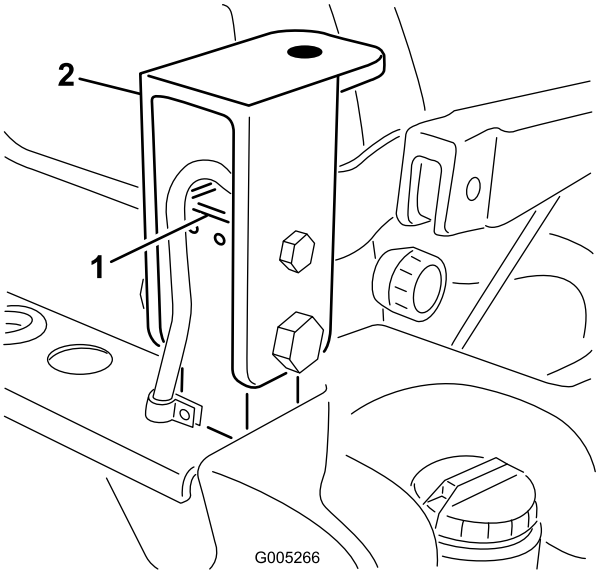

Figure 93

1. ROPS post
2. Cab mount support

39. Position the ROPS assembly onto the ROPS posts. Install the bolt, nut, hair pin cotter and pin securing each ROPS assembly to the ROPS posts (Figure 94).

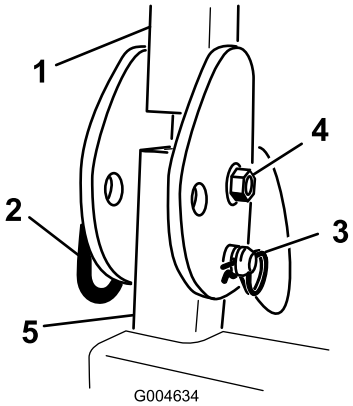

Figure 94

1. ROPS
2. Pin
3. Cotter pin
4. Bolt & nut
5. ROPS post

40. Start the machine, raise and lower the deck. Check for leaks and make sure the hoses do not rub against the frame.

Summer to Winter Conversion

1. Start the machine and lower the mower deck to the lowest height of cut. Position the machine on a level surface so the mower deck frame can be rolled away and replaced with the winter frame.
2. Remove the bolt, nut, hair pin cotter and pin securing each ROPS assembly to the ROPS posts (Figure 95). Remove the ROPS assembly.

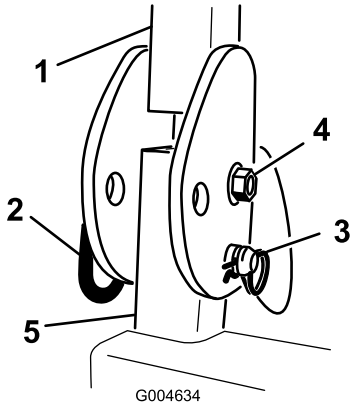

Figure 95

1. ROPS
2. Pin
3. Cotter pin
4. Bolt & nut
5. ROPS post

3. Loosely install a cab mount support to each ROPS post with two bolts (1/2 x 3 inches), two nuts (1/2 inch), two bolts (3/4 x 3–1/2 inch) and two nuts (3/4 inch) (Figure 96). Make sure the top plate hole is positioned forward. Do not tighten bolts at this time.

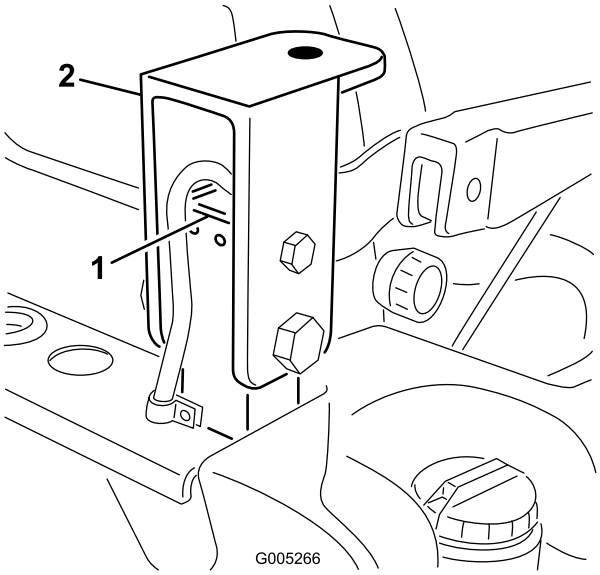

Figure 96

1. ROPS post
2. Cab mount support

4. Position a suitable floor jack under the rear bumper tube and raise the rear tires off of the ground (Figure 97).

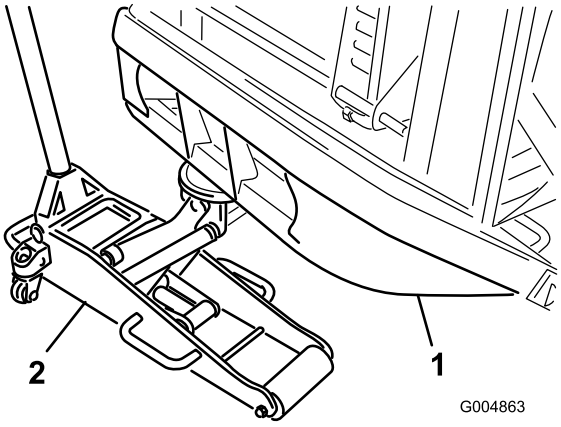

Figure 97

1. Rear bumper tube
2. Floor jack

5. On traction units that have a serial number prior to 312999999, install the vertical tube support assembly to each rear corner of the deck frame with a clevis pin and a self-tapping screw, 1/4 inch (Figure 98).

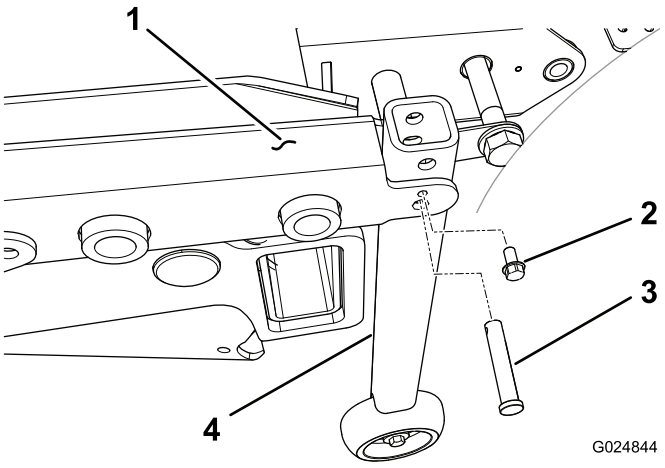

Figure 98

1. Deck frame
2. Self tapping screw
3. Clevis pin
4. Vertical tube support assembly

6. On traction units that have a serial number greater than 313000001, install a conversion bracket (right or left hand) to the under side of the appropriate rear corner of the deck frame with a self-tapping screw, 3/8 x 5/8 inch (Figure 99). The bracket is to point toward the end of the rear frame.

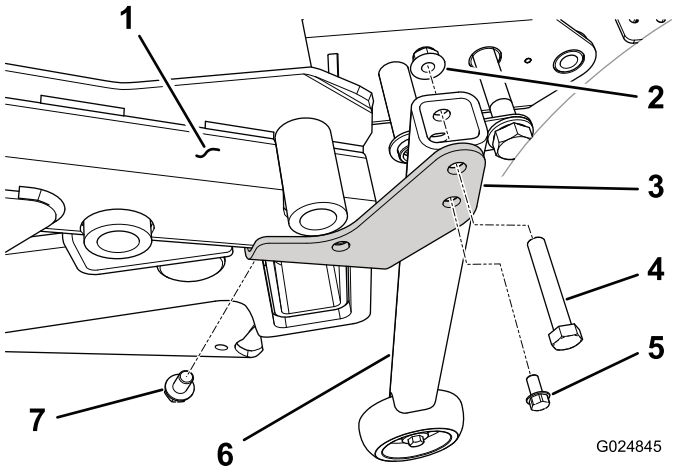

Figure 99

1. Deck frame
2. Flange nut
3. Conversion bracket (left side shown)
4. Screw
5. Self tapping screw
6. Vertical tube support assembly
7. Self tapping screw

7. Install the vertical tube support assembly to the conversion bracket (right or left hand) on each corner of the deck frame with a 3/8 x 2–1/4 inch screw and 3/8 inch flange nut (Figure 99).

8.

9. Remove the retaining ring securing the rear of the deck lift cylinder to the pivot pin (Figure 100).

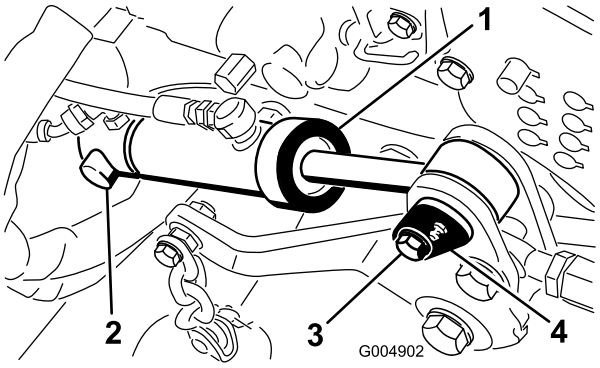

Figure 100

1. Deck lift cylinder
2. Retaining ring
3. Screw
4. Cylinder pin

10. Remove the screw securing the front cylinder pivot pin to the mower frame (Figure 100). Remove the cable tie securing the pressure and tank hoses.

11. Remove the front pivot pin and slide the cylinder off the rear pin (Figure 100). Let the cylinder hang out of the way on the hoses (Figure 101).

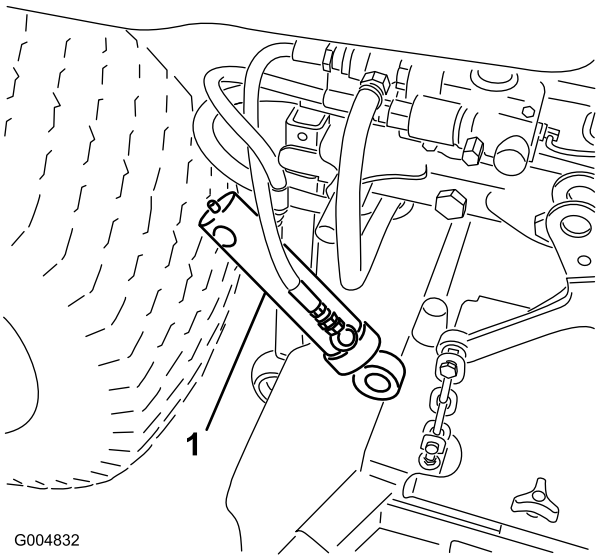

Figure 101

1. Deck lift cylinder

12. Pivot open the floor plate (Figure 102) and secure with prop rod.

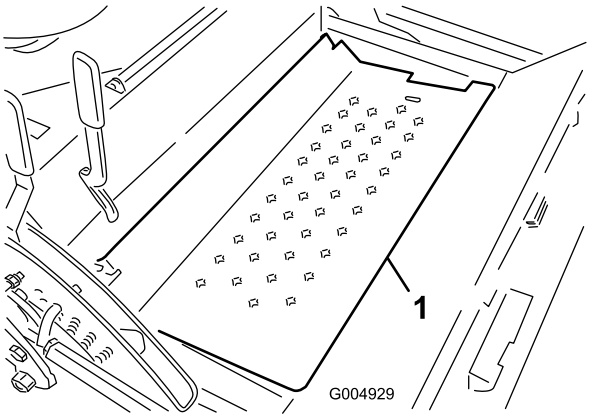

Figure 102

1. Floor plate

13. Remove the roll pin and loosen the two capscrews securing the drive shaft to the gearbox shaft (Figure 103). Slide the drive shaft off the gearbox shaft.

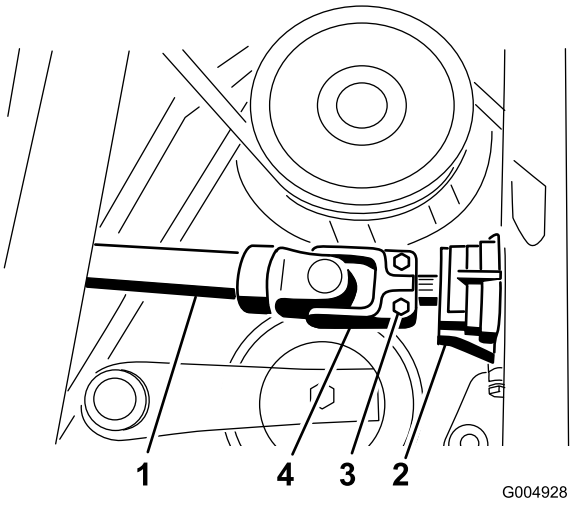

Figure 103

1. Pressure hose
2. Tank hose
3. Hose cover
4. Cable tie
5. Bolts
6. Roll pin

14. Disconnect the tank hose from the control valve (Figure 104). Cap the hose and fitting with a cap and plug. Pull the tank hose back toward the rear of the frame.

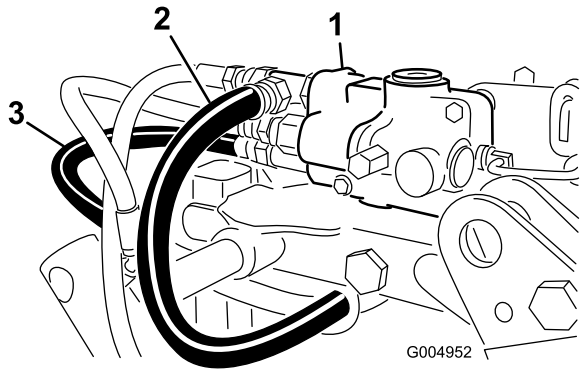

Figure 104

1. Control valve
2. Tank hose
3. Pressure hose

15. Disconnect the pressure hose from the control valve (Figure 104). Cap the hose and fitting with a cap and plug. Pull the hose back toward the rear of the frame.

16. Lower the floor jack until the deck vertical support assemblies are supporting the rear of the deck frame and the rear bumper is lightly supported.

17. Carefully remove the bolts (3/4 inch), washers and nuts that secure the deck frame to the rear frame (3 on the left side and 2 on the right side) (Figure 105). Retain 4 of the bolts for re-installation and store the remaining for summer change over.

    Note: The floor jack can be raised or lowered to ease removal of the bolts. Lower the floor jack completely once the bolts are removed.

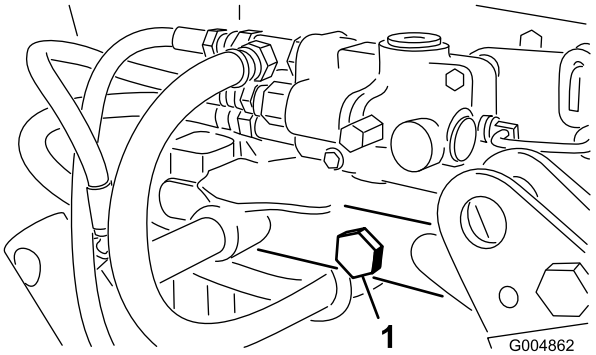

Figure 105

1. 3 mounting bolts (3/4 inch), washers and nuts (Left side)

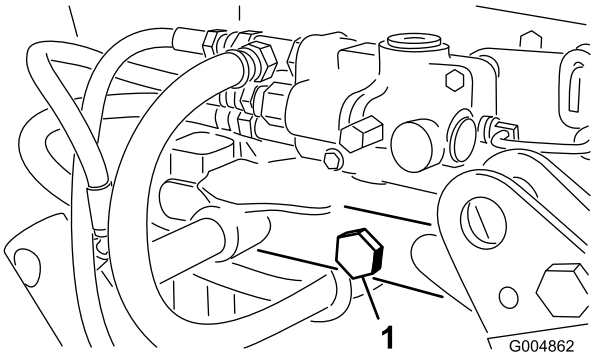

Figure 106

1. Two mounting bolts (3/4 inch), washers and nuts (Right side)

18. Roll the mower deck and frame forward and out of the way.

19. Loosen the pressure hose fitting at the pump and rotate the fitting 45 degrees toward the front of the machine (Figure 107).

    Note: Figure 107 is shown as viewed from under the traction unit.

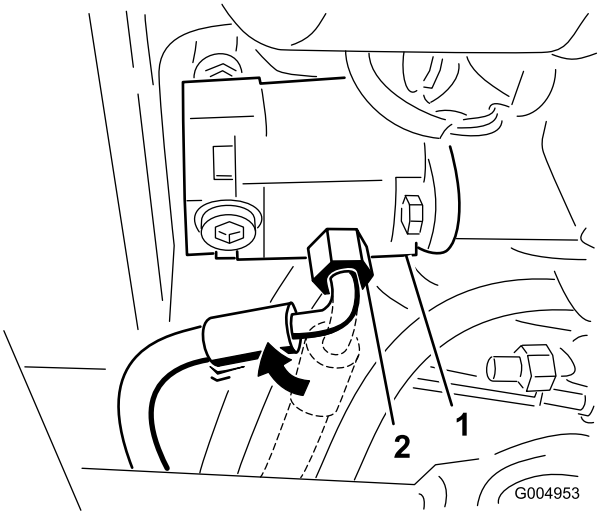

Figure 107

1. Pump
2. Pressure hosed fitting (rotated 45 degrees)

20. Remove the two screws securing the winter frame floor plate cover to the floor and remove the plate (Figure 108).

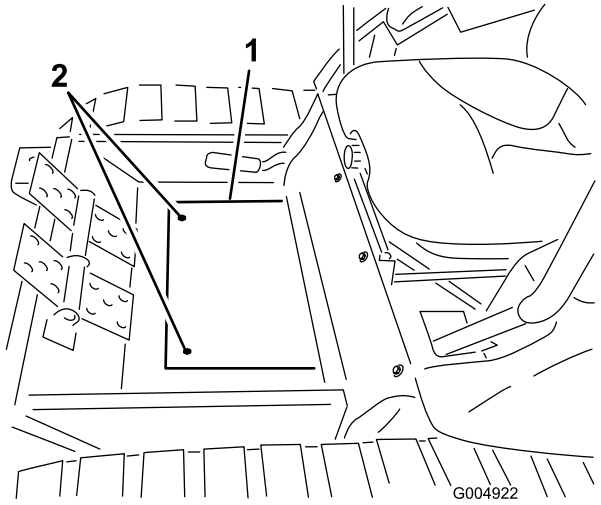

Figure 108

1. Floor plate cover
2. Mounting screws

21. Carefully roll the winter frame assembly into position while routing the drive shaft through the frame tube (Figure 109).

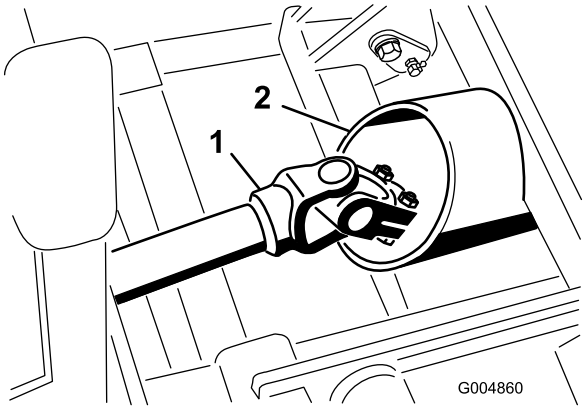

Figure 109

1. Drive shaft
2. Frame tube

Note: If the rear of the cab is not high enough to clear the control handles, evenly tighten the jacking bolts on each side of the cab jack tube to raise the rear of the cab (Figure 110).

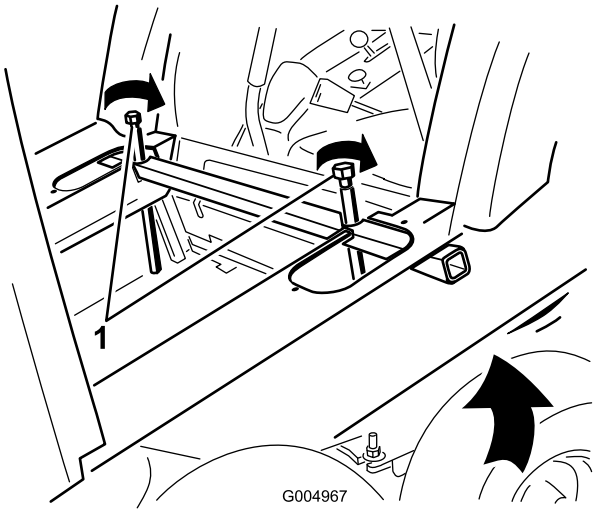

Figure 110

1. Jacking bolts

22. Route the hoses as follows:
    - Route the tank hose under the lift cylinder and between the cylinder mounting brackets to the valve (Figure 111).
    - Route the pressure hose along side the PTO shaft to the valve (Figure 111).

Note: To emphasis the hose routing, the hoses are shown without the hose covers installed.

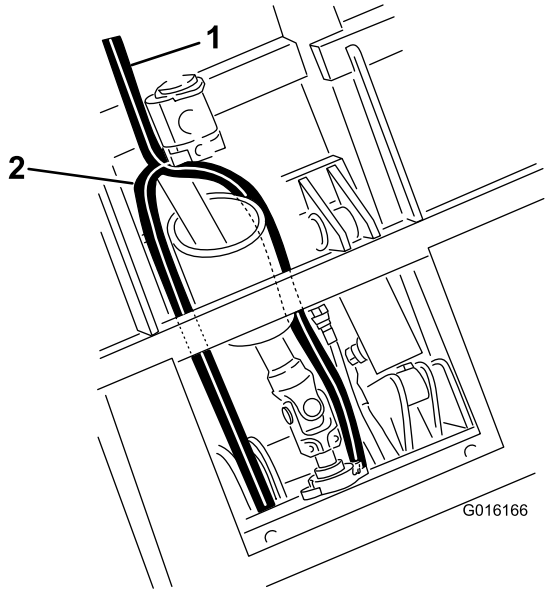

Figure 111

1. Tank hose
2. Pressure hose

23. Connect the drive shaft to the gear box shaft in the winter frame and torque the bolts (5/16 inch) to 20 to 25 N-m (175-225 in-lb). Install the roll pin (Figure 112).

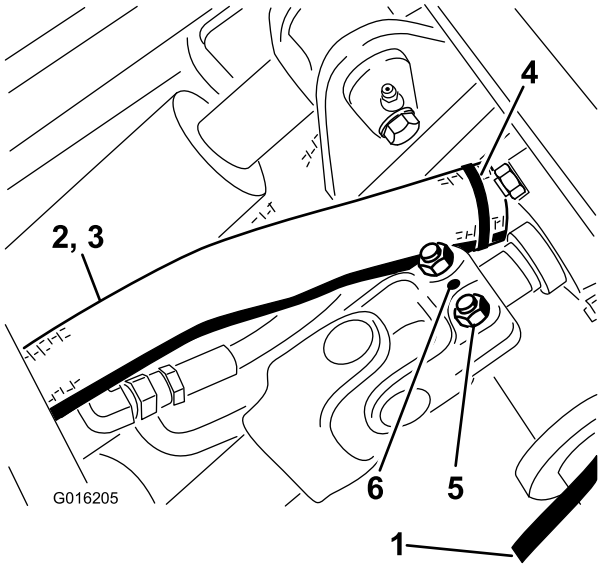

Figure 112

1. Pressure hose
2. Tank hose
3. Hose cover
4. Cable tie
5. Bolts
6. Roll pin

24. With the winter frame against the rear frame, raise the floor jack enough to remove the summer drive tires (Figure 113). Install the winter tires with 2 lug nuts per side.

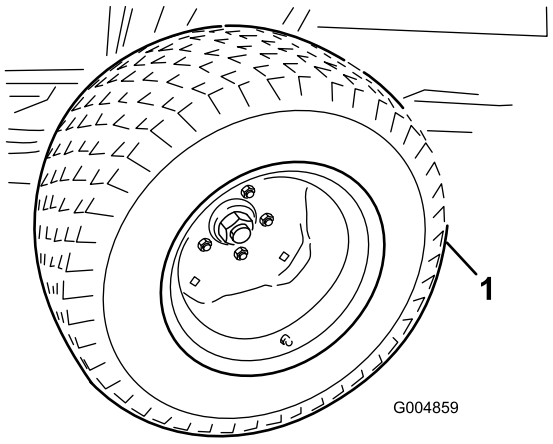

Figure 113

1. Summer drive tire

25. Adjust the floor jack to line up the 2.5 cm (1.00 inch) holes in the frame and install a coupler pin on each side (Figure 114).

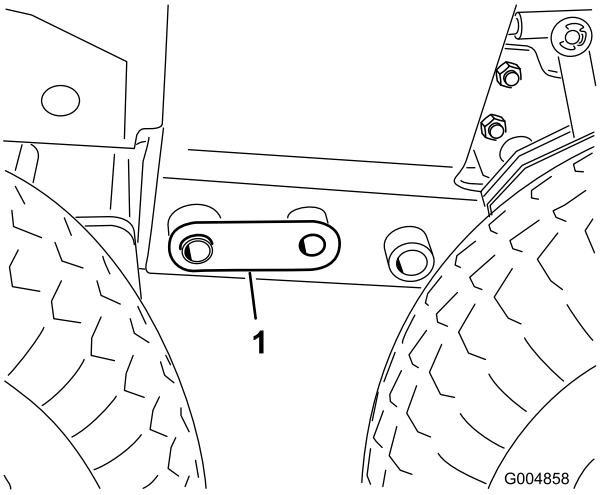

Figure 114

1. Coupler pin

26. Adjust the floor jack or rock the cab with your hands as required to install the bolts (3/4 inch) on each side (Figure 115). Torque the bolts to 359 N-m (265 ft-lb).

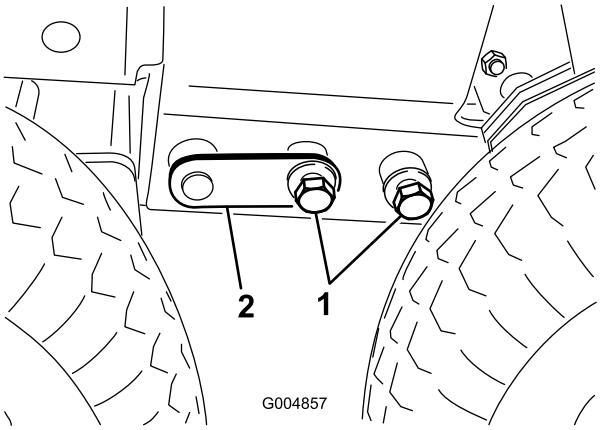

Figure 115

1. 3/4 inch bolts
2. Coupler pin

Note: The rear tires will need to be removed to torque the rear bolts (3/4 inch). After torquing the frame bolts, install the rear tires and torque lug nuts to 88 to 115 N-m (65 to 85 ft-lb).

27. Insert a rubber mount onto each cab mount at the rear mounting locations (Figure 116).

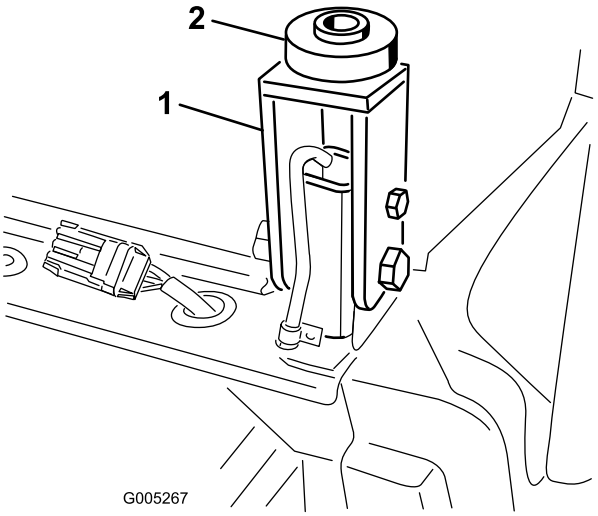

Figure 116

1. Cab mount
2. Rubber mount

28. Lower the cab into position by slowly and evenly loosening the jacking bolts on each end of the jacking tube (Figure 117).

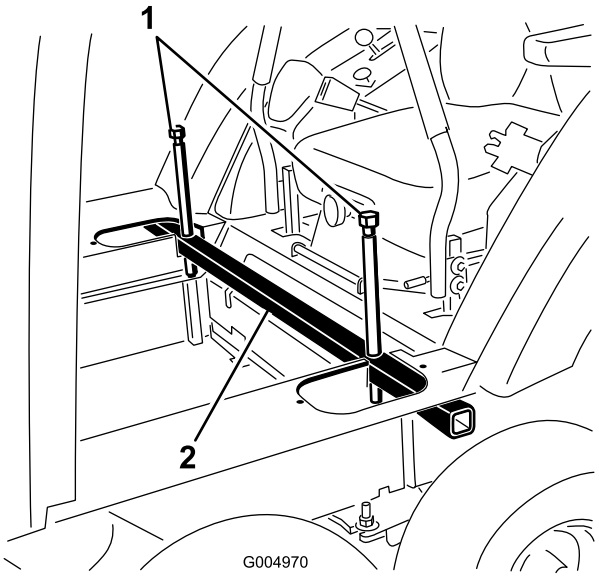

Figure 117

1. Jacking bolts
2. Cab jack tube

29. At the rear mounting points, secure the cab to the machine with a bolt (1/2 x 3 inches), steel washer (1/2 x 2–1/2 inches), rubber washer (1/2 x 2–1/2 inches) and nut (1/2 inch) (Figure 118). Tighten all four cab mount bolts until the rubber mounts are compressed to a thickness of 2.2 cm (7/8 inch).

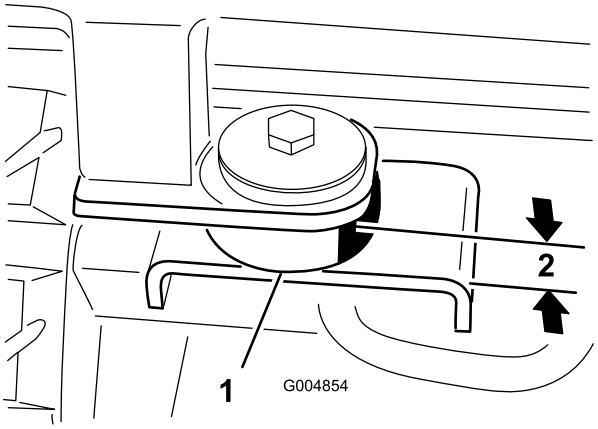

Figure 118

1. Rubber mount
2. 0.875 inch (2.2 cm)

30. Tighten the bolts and nuts securing the rear cab mounts to the ROPS posts (Figure 119). Adjust the floor jack if the bolts are binding and difficult to remove.

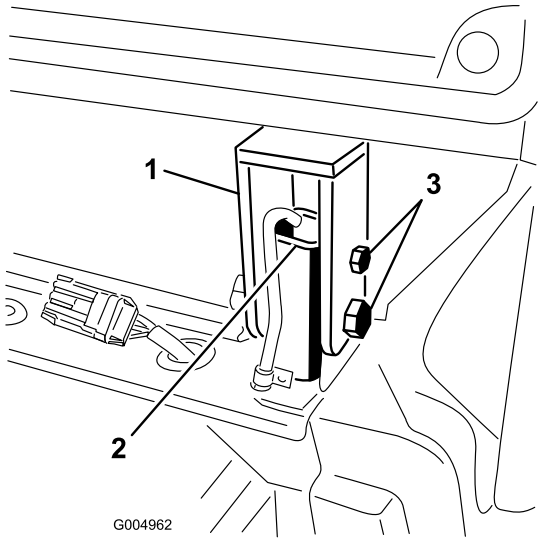

Figure 119

1. Cab mount
2. ROPS post
3. Bolts & nuts
4. ROPS post

31. Loosen the jacking bolts and remove the cab jack tube from the cutouts in the cab floor (Figure 120).

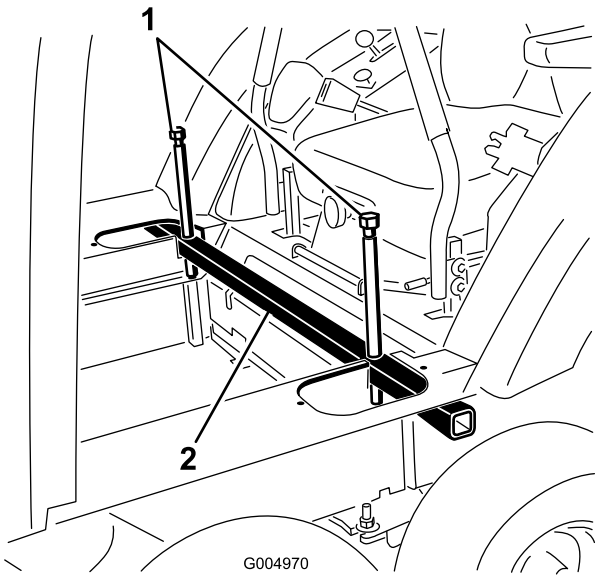

Figure 120

1. Jacking bolts
2. Cab jack tube

32. Connect the hydraulic pressure hose to the valve hard line and the tank hose to the valve (Figure 121). Retain the hose plugs for the summer change over.

Note: Make sure the hoses are note kinked or are rubbing against any moving parts.

Note: Adjust the angle of the fittings to accommodate the routing of the hoses.

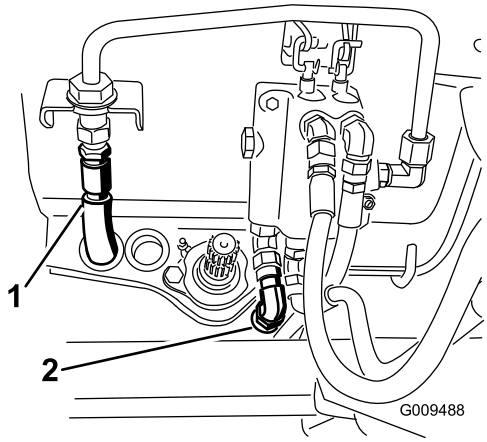

Figure 121

1. Pressure hose
2. Tank hose

33. Raise the rear of the machine until 2 jack stands can be positioned under the rear tube at a height that supports the rear tires 1 to 3 inches (2.5 to 7.5 cm) off of the ground.

34. Lower the floor jack so the rear frame rests on the jack stands. Position the floor jack under the center of the front lift arm pivot tube.

35. Remove the flat washer (1/2 inch) and nut (1/2 inch) installed on the stud on the bogie pivot (Figure 122).

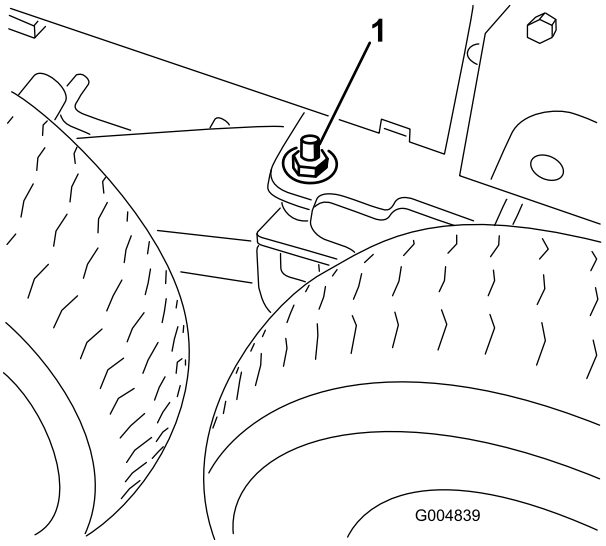

Figure 122

1. Washer & nut on the bogie pivot stud

36. Raise the floor jack until the front tires are off of the ground high enough to install the track beneath them and support the frame with jack stands.

37. Remove the front and center tires from the winter assembly (Figure 123).

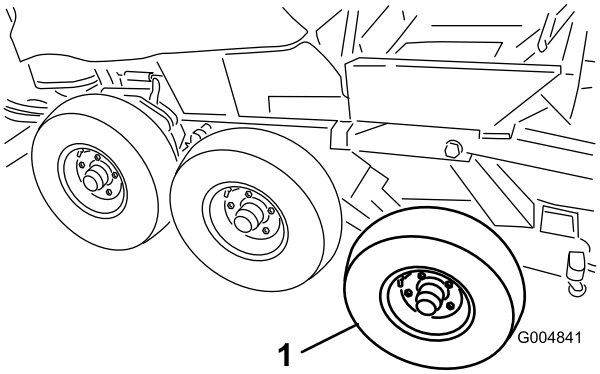

Figure 123

1. Front tire

38. Carefully lift the tracks over the rear wheel and front hubs. The direction of the track rotation is printed on the track. The V design in the rubber track must point forward.

⚠ CAUTION

The track guides have many pinch points. Carefully grasp the rubber track on the outer edges outboard of the steel guides when moving the track.

39. Adjust the floor jack to a suitable height to install the front tire. With a helper, lift the front of the track enough to carefully install the front tires (Figure 124).

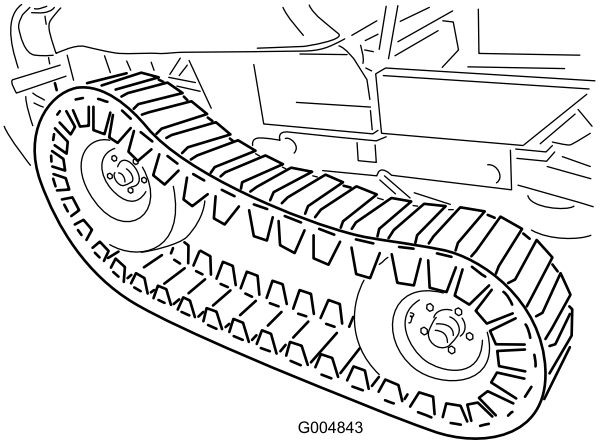

Figure 124

40. Adjust the floor jack to a suitable height to install the center tire. Lift the center of the track enough to install the center tire. Torque the lug nuts to 88 to 115 N-m (65 to 85 ft-lb).

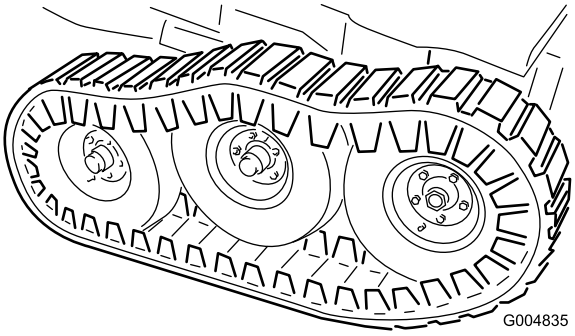

Figure 125

41. Lower the floor jack until the front wheels support the frame. Install the flat washers (1/2 inch) and locknuts on the bogie pivot stud (Figure 125) and torque to 102 N·m (75 ft-lb).

Note: You may need to move the floor jack to the rear bumper to raise the rear of the machine high enough to install the flat washer and locknut.

42. Install the side access covers with the screws previously removed (Figure 126).

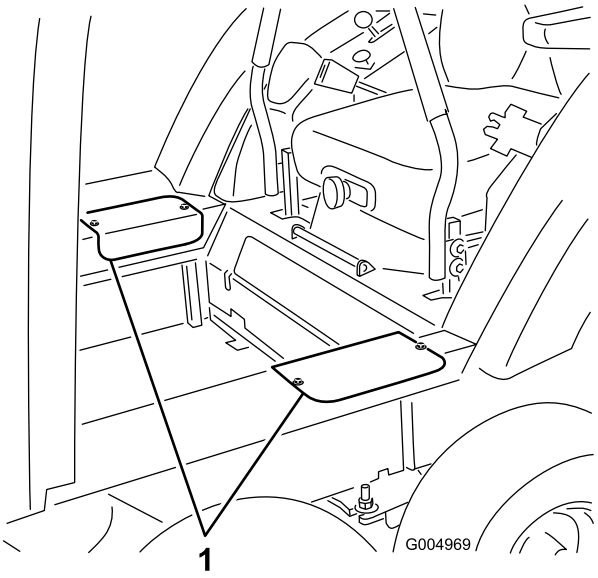

Figure 126

1. Access covers

43. Install the winter frame floor plate cover to the floor with the screws previously removed (Figure 127).

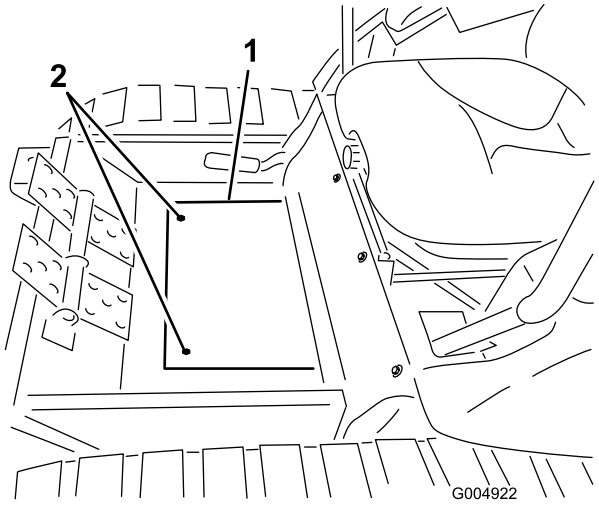

Figure 127

1. Floor plate cover
2. Mounting screws

44. Connect the cab pressure and return hoses to the quick couplers on the rear frame mount (Figure 128).

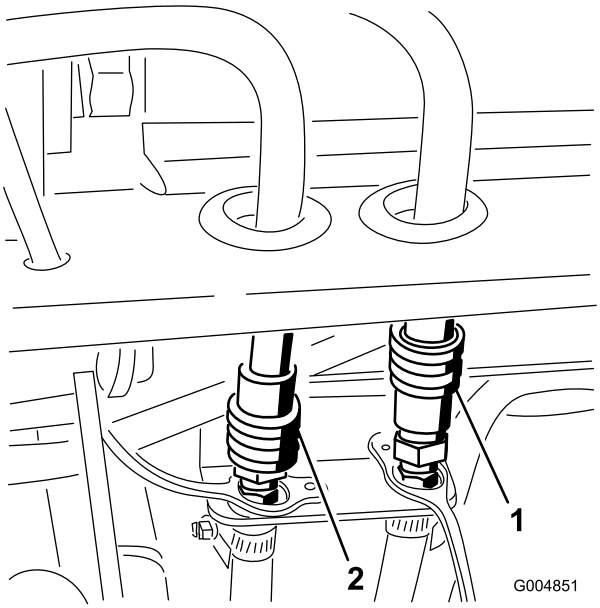

Figure 128

1. Pressure hose
2. Return hose

45. Remove the cap and plug the cab wire harness connector into the harness on the rear frame mount (Figure 129).

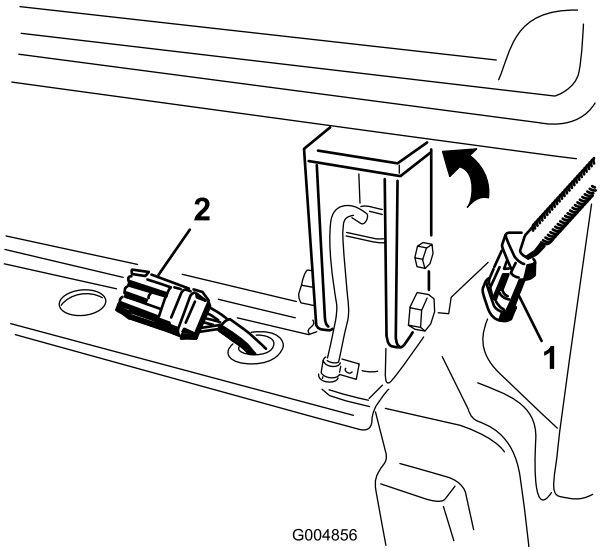

Figure 129

1. Cab wire harness connector
2. Harness connector on the rear frame mount

46. Start the machine. Run the lift arm up and down and check for hydraulic leaks. Check the antifreeze level and replenish as required.

Maintenance

Recommended Maintenance Schedule(s)

Maintenance Service Interval	Maintenance Procedure
After the first 10 hours	• Torque the frame mounting bolts. • Torque wheel lug nuts.
Every 50 hours	• Lubricate grease fittings • Check the tire pressure.
Every 200 hours	• Torque wheel lug nuts.

⚠ CAUTION

If you leave the key in the ignition switch, someone could accidently start the engine and seriously injure you or other bystanders.

Remove the key from the ignition before you do any maintenance.

Lubrication

Greasing and Lubrication

Lubricate the machine every 50 hours. Grease more frequently when operating conditions are extremely dusty or sandy.

Grease Type: General-purpose grease.

How to Grease

Service Interval: Every 50 hours

1. Disengage the PTO and set the parking brake.
2. Stop the engine, remove the key, and wait for all moving parts to stop before leaving the operating position.
3. Clean the grease fittings with a rag. Make sure to scrape any paint off the front of the fitting(s).
4. Connect a grease gun to the fitting. Pump grease into the fittings until grease begins to ooze out of the bearings.
5. Wipe up any excess grease.

Where to Add Grease

The grease fitting locations and quantities are:

Bogie pivot assembly –2 (Figure 130)

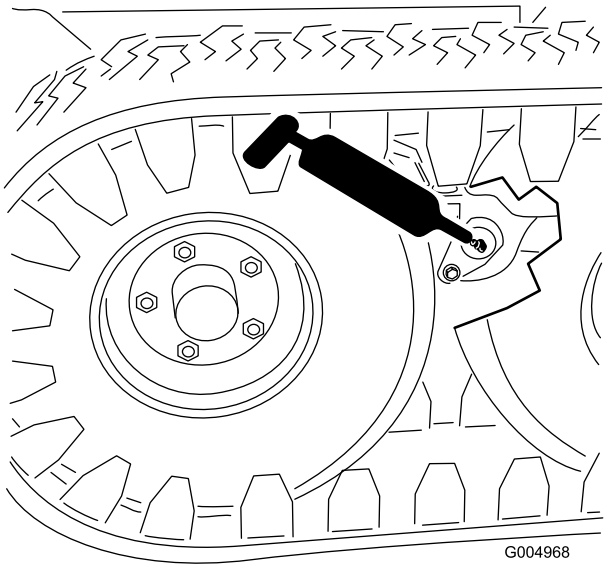

Figure 130

1. Bogie pivot assembly (2)

PTO shaft bearings –2 (Figure 131)

Hydraulic cylinder pivot pins –2 (Figure 131)

Lift arm pivot –1 (Figure 131)

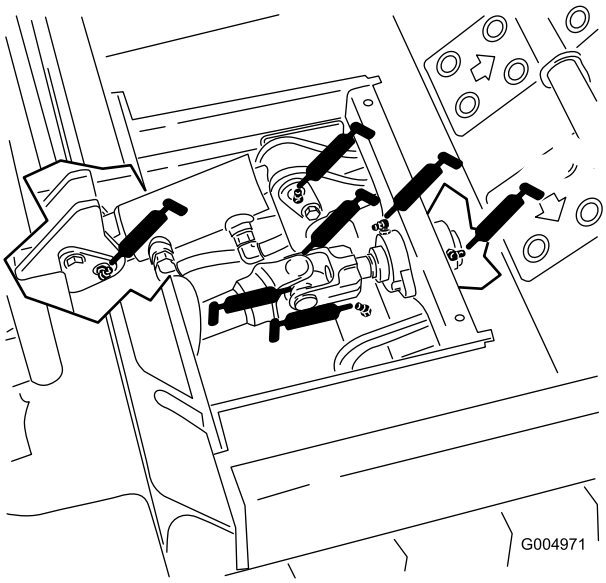

Figure 131

1. PTO shaft bearings (2)
2. Hydraulic cylinder pivot pins (2)
3. Lift arm pivot (1)

Electrical System Maintenance

Important: Whenever working with the electrical system, always disconnect the battery cables, negative (-) cable first, to prevent possible wiring damage from short-outs.

Checking the Fuses

Refer to the *Operator's Manual* supplied with the cab for instructions on fuses.

If the machine has any electrical system issues, check the fuses. Grasp each fuse and remove them one at a time, checking to see if any are blown. If you need to replace a fuse, always use the **same type and amperage rated fuse** as the one you are replacing, **otherwise you could damage the electrical system**

Note: If a fuse blows frequently, you probably have a short in the electrical system and should have it serviced by a qualified service technician.

Drive System Maintenance

Checking the Tire Pressure

Service Interval: Every 50 hours

Check the tire pressure every 50 hours (Figure 132).

Maintain the air pressure in the tires at 240 kPa (35 psi). Uneven tire pressure can cause lose of traction. If a lose of traction occurs, tire pressure may be increased to 344 kPa (50 psi) to increase track tension. Check the tires when they are cold to get the most accurate pressure reading.

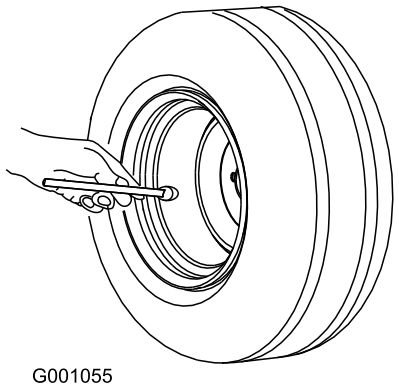

Figure 132

Removing the Rear Wheel

1. Raise the rear of machine until the track is about 1 inch off the floor and support it with jack stands.
2. Remove the two screws securing each side access cover and remove the covers (Figure 133).

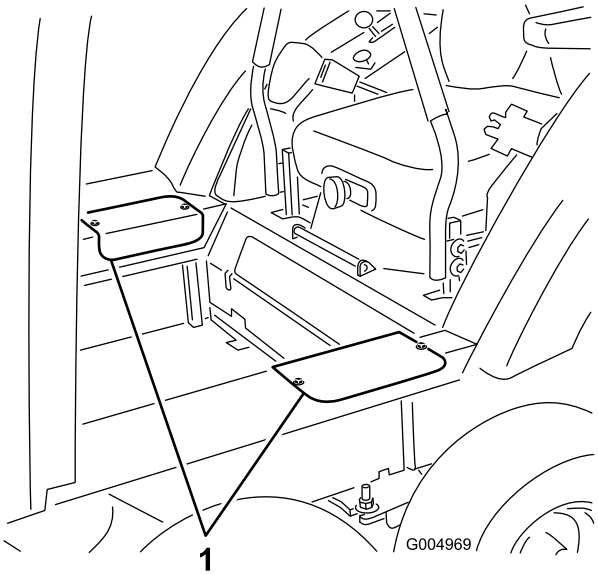

Figure 133

1. Access covers

3. Loosen and remove the locknut and flat washer from the bogie pivot weldment (Figure 134).

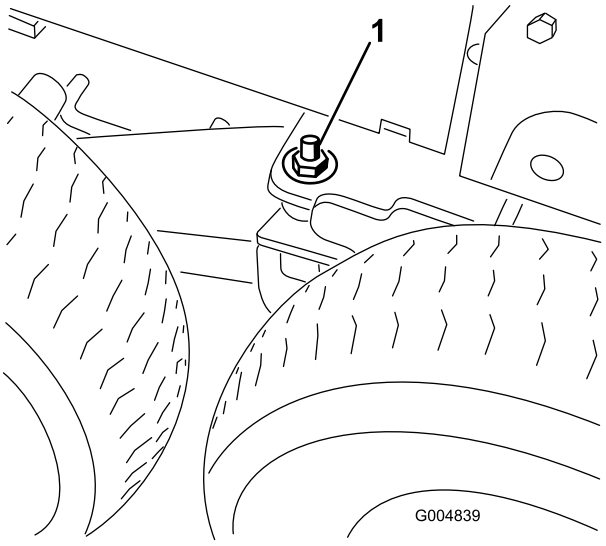

Figure 134

1. Washer & nut on the bogie pivot stud

4. Raise the front of the machine enough to relieve track tension and to allow the removal of the rear tire. Support the front of the machine with jack stands.
5. Remove the lug nuts and carefully remove the wheel and tire.
6. Lower the floor jack until the front wheels support the frame. Install the flat washers (1/2 inch) and locknuts on the bogie pivot stud (Figure 134). and torque to 102 N-m (75 ft-lb).

   Note: You may need to move the floor jack to the rear bumper to raise the rear of the machine high enough to install the flat washer and locknut.

   Note: The front and center wheels can be removed without raising and supporting the rear of the machine.

Storage

Machine

1. Thoroughly clean the machine and cab, paying special attention to these areas:
   - PTO shaft assembly
   - All grease fittings and pivot points
   - Oil the spline on the PTO output shaft to prevent rusting
2. Check and adjust tire pressure; refer to Checking Tire Pressure.
3. Check all fasteners for looseness and tighten them as necessary. Especially torque the 5 bolts securing the winter frame to the traction unit to 359 N·m (265 ft-lb).
4. Grease or oil all grease fittings and pivot points. Wipe off any excess lubricant.
5. Lightly sand and use touch up paint on painted areas that are scratched, chipped or rusted. Repair any dents in the metal body.

The Toro Total Coverage Guarantee

A Limited Warranty

Conditions and Products Covered

The Toro Company and its affiliate, Toro Warranty Company, pursuant to an agreement between them, jointly warrant your Toro Commercial product (“Product”) to be free from defects in materials or workmanship for two years or 1500 operational hours*, whichever occurs first. This warranty is applicable to all products with the exception of Aerators (refer to separate warranty statements for these products). Where a warrantable condition exists, we will repair the Product at no cost to you including diagnostics, labor, parts, and transportation. This warranty begins on the date the Product is delivered to the original retail purchaser.
* Product equipped with an hour meter.

Instructions for Obtaining Warranty Service

You are responsible for notifying the Commercial Products Distributor or Authorized Commercial Products Dealer from whom you purchased the Product as soon as you believe a warrantable condition exists. If you need help locating a Commercial Products Distributor or Authorized Dealer, or if you have questions regarding your warranty rights or responsibilities, you may contact us at:

Toro Commercial Products Service Department
Toro Warranty Company
8111 Lyndale Avenue South
Bloomington, MN 55420-1196

952–888–8801 or 800–952–2740
E-mail: commercial.warranty@toro.com

Owner Responsibilities

As the Product owner, you are responsible for required maintenance and adjustments stated in your *Operator's Manual*. Failure to perform required maintenance and adjustments can be grounds for disallowing a warranty claim.

Items and Conditions Not Covered

Not all product failures or malfunctions that occur during the warranty period are defects in materials or workmanship. This warranty does not cover the following:

- Product failures which result from the use of non-Toro replacement parts, or from installation and use of add-on, or modified non-Toro branded accessories and products. A separate warranty may be provided by the manufacturer of these items.
- Product failures which result from failure to perform recommended maintenance and/or adjustments. Failure to properly maintain your Toro product per the Recommended Maintenance listed in the *Operator’s Manual* can result in claims for warranty being denied.
- Product failures which result from operating the Product in an abusive, negligent, or reckless manner.
- Parts subject to consumption through use unless found to be defective. Examples of parts which are consumed, or used up, during normal Product operation include, but are not limited to, brake pads and linings, clutch linings, blades, reels, rollers and bearings (sealed or greasable), bed knives, spark plugs, castor wheels and bearings, tires, filters, belts, and certain sprayer components such as diaphragms, nozzles, and check valves, etc.
- Failures caused by outside influence. Conditions considered to be outside influence include, but are not limited to, weather, storage practices, contamination, use of unapproved fuels, coolants, lubricants, additives, fertilizers, water, or chemicals, etc.
- Failure or performance issues due to the use of fuels (e.g. gasoline, diesel, or biodiesel) that do not conform to their respective industry standards.
- Normal noise, vibration, wear and tear, and deterioration.
- Normal “wear and tear” includes, but is not limited to, damage to seats due to wear or abrasion, worn painted surfaces, scratched decals or windows, etc.

Parts

Parts scheduled for replacement as required maintenance are warranted for the period of time up to the scheduled replacement time for that part. Parts replaced under this warranty are covered for the duration of the original product warranty and become the property of Toro. Toro will make the final decision whether to repair any existing part or assembly or replace it. Toro may use remanufactured parts for warranty repairs.

Deep Cycle and Lithium-Ion Battery Warranty:

Deep cycle and Lithium-Ion batteries have a specified total number of kilowatt-hours they can deliver during their lifetime. Operating, recharging, and maintenance techniques can extend or reduce total battery life. As the batteries in this product are consumed, the amount of useful work between charging intervals will slowly decrease until the battery is completely worn out. Replacement of worn out batteries, due to normal consumption, is the responsibility of the product owner. Battery replacement may be required during the normal product warranty period at owner’s expense. Note: (Lithium-Ion battery only): A Lithium-Ion battery has a part only prorated warranty beginning year 3 through year 5 based on the time in service and kilowatt hours used. Refer to the *Operator's Manual* for additional information.

Maintenance is at Owner’s Expense

Engine tune-up, lubrication, cleaning and polishing, replacement of filters, coolant, and completing recommended maintenance are some of the normal services Toro products require that are at the owner’s expense.

General Conditions

Repair by an Authorized Toro Distributor or Dealer is your sole remedy under this warranty.

Neither The Toro Company nor Toro Warranty Company is liable for indirect, incidental or consequential damages in connection with the use of the Toro Products covered by this warranty, including any cost or expense of providing substitute equipment or service during reasonable periods of malfunction or non-use pending completion of repairs under this warranty. Except for the Emissions warranty referenced below, if applicable, there is no other express warranty. All implied warranties of merchantability and fitness for use are limited to the duration of this express warranty.

Some states do not allow exclusions of incidental or consequential damages, or limitations on how long an implied warranty lasts, so the above exclusions and limitations may not apply to you. This warranty gives you specific legal rights, and you may also have other rights which vary from state to state.

Note regarding engine warranty:

The Emissions Control System on your Product may be covered by a separate warranty meeting requirements established by the U.S. Environmental Protection Agency (EPA) and/or the California Air Resources Board (CARB). The hour limitations set forth above do not apply to the Emissions Control System Warranty. Refer to the Engine Emission Control Warranty Statement supplied with your product or contained in the engine manufacturer’s documentation for details

Countries Other than the United States or Canada

Customers who have purchased Toro products exported from the United States or Canada should contact their Toro Distributor (Dealer) to obtain guarantee policies for your country, province, or state. If for any reason you are dissatisfied with your Distributor's service or have difficulty obtaining guarantee information, contact the Toro importer.