Form No. 3383-169 Rev A

TORO®

Count on it.

Operator's Manual

Groundsmaster® 7210 Traction Unit

Model No. 30381N—Serial No. 314000001 and Up

Register at www.Toro.com.
Original Instructions (EN)

3383-169 A

⚠ WARNING

CALIFORNIA
Proposition 65 Warning

This product contains a chemical or chemicals known to the State of California to cause cancer, birth defects, or reproductive harm.

Diesel engine exhaust and some of its constituents are known to the State of California to cause cancer, birth defects, and other reproductive harm.

Because in some areas there are local, state, or federal regulations requiring that a spark arrester be used on the engine of this machine, a spark arrester is available as an option. If you require a spark arrester, contact your Authorized Toro Service Dealer.

Genuine Toro spark arresters are approved by the USDA Forestry Service.

Important: It is a violation of California Public Resource Code Section 4442 to use or operate the engine on any forest-covered, brush-covered, or grass-covered land without a spark arrester muffler maintained in working order, or the engine constricted, equipped, and maintained for the prevention of fire. Other states or federal areas may have similar laws.

Introduction

Important: Use this manual in conjunction with the Polar Trac kit or any other attachments Operator's Manual for additional information on the safe operation and maintenance of your machine and it's attachments.

This traction unit is used in the summer with a rotary-blade lawnmower attachment and in the winter with a snow removal attachment and is intended to be used by professional, hired operators in commercial applications.

Read this information carefully to learn how to operate and maintain your product properly and to avoid injury and product damage. You are responsible for operating the product properly and safely.

You may contact Toro directly at www.Toro.com for product and accessory information, help finding a dealer, or to register your product.

Whenever you need service, genuine Toro parts, or additional information, contact an Authorized Service Dealer or Toro Customer Service and have the model and serial numbers of your product ready. Figure 1 identifies the location of the model and serial numbers on the traction unit. The model and serial numbers for the cab are printed on a plate located on inside the cab, on the frame above the door. Write the numbers in the space provided.

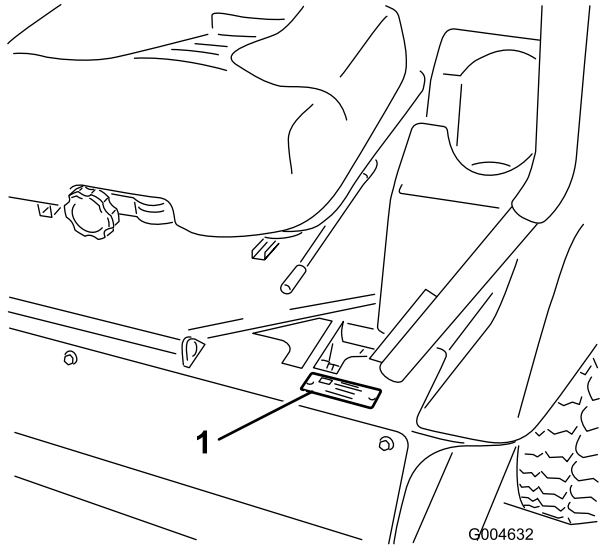

Figure 1

1. Model and serial number location

Model No. _____

Serial No. _____

This manual identifies potential hazards and has safety messages identified by the safety alert symbol (Figure 2), which signals a hazard that may cause serious injury or death if you do not follow the recommended precautions.



Figure 2

1. Safety alert symbol

This manual also uses 2 words to highlight information. **Important** calls attention to special mechanical information and **Note** emphasizes general information worthy of special attention.

© 2014—The Toro® Company
8111 Lyndale Avenue South
Bloomington, MN 55420

Contact us at www.Toro.com.
Printed in the USA.
All Rights Reserved

Contents

Introduction 2
Safety 4
Safe Operating Practices 4
Safety and Instructional Decals 6
Setup 9
1 Checking Fluid Levels 10
2 Activating and Charging the Battery 10
3 Installing the Mower Deck/Polar Trac 11
Product Overview 19
Controls 19
Operation 21
Adding Fuel 21
Checking the Engine Oil Level 22
Checking the Cooling System 22
Checking the Hydraulic System 22
Think Safety First 22
Operating the Parking Brake 23
Starting the Engine 23
Driving the Machine 24
Stopping the Machine/Engine 24
The Safety Interlock System 25
Positioning the Seat 26
Unlatching the Seat 27
Moving a Non-functioning Machine 27
Loading Machines 27
Transporting the Machine 28
Operating Front Attachments with the Polar Trac Kit Installed 28
Maintenance 30
Recommended Maintenance Schedule(s) 30
Daily Maintenance Checklist 31
Premaintenance Procedures 32
Lubrication 32
Greasing the Bearings and Bushings 32
Engine Maintenance 33
Air Cleaner Maintenance 33
Servicing the Engine Oil 33
Fuel System Maintenance 35
Servicing the Water Separator 35
Cleaning the Fuel Tank 35
Fuel Lines and Connections 35
Bleeding the Fuel System 35
Bleeding Air From the Injectors 36
Electrical System Maintenance 37
Servicing the Battery 37
Storing the Battery 37
Checking the Fuses 37
Cooling System Maintenance 38
Checking the Cooling System 38
Cleaning the Radiator 38
Brake Maintenance 39
Adjusting the Parking Brake Interlock Switch 39
Belt Maintenance 40
Checking the Alternator Belt Tension 40
Controls System Maintenance 40
Adjusting the Control Lever Neutral Interlock Switch 40
Adjusting the Control Lever Neutral Return 40
Adjusting the Traction Drive for Neutral 41
Adjusting the Maximum Ground Speed 42
Adjusting the Tracking 43
Hydraulic System Maintenance 44
Checking the Hydraulic Fluid Level 44
Changing the Hydraulic Oil And Filter 44
Storage 45
Machine 45
Engine 45

Safety

This machine meets or exceeds ANSI B71.4-2004 specifications in effect at the time of production.

Improper use or maintenance by the operator or owner can result in injury. To reduce the potential for injury, comply with these safety instructions and always pay attention to the safety alert symbol, which means **Caution, Warning, or Danger**—personal safety instruction. Failure to comply with the instruction may result in personal injury or death.

Safe Operating Practices

The following instructions are adapted from ANSI B71.4-2012.

This product is capable of amputating hands and feet and throwing objects. Always follow all safety instructions to avoid serious injury or death.

Important: Refer to the *ROPS Hard Cab Operator's Manual* for additional cab safety information.

Training

- Read the *Operator's Manual* and other training material carefully. Be familiar with the controls, safety signs, and the proper use of the equipment.
- Never allow children or people unfamiliar with these instructions to use the machine. Local regulations can restrict the age of the operator.
- Never operate while people, especially children, or pets are nearby.
- Keep in mind that the operator or user is responsible for accidents or hazards occurring to other people or their property.
- Do not carry passengers.
- All drivers should seek and obtain professional and practical instruction. Such instruction should emphasize:
  - the need for care and concentration when working with ride-on machines;
  - control of a ride-on machine sliding on a slope will not be regained by the application of the control levers. The main reasons for loss of control are:
    - ◊ insufficient track grip, especially on wet grass, ice or snow;
    - ◊ being driven too fast;
    - ◊ inadequate braking;
    - ◊ the type of machine is unsuitable for its task;
    - ◊ lack of awareness of the effect of ground conditions, especially slopes;
    - ◊ incorrect hitching and load distribution.

Preparation

- While operating, always wear substantial footwear and long trousers. Do not operate the equipment when barefoot or wearing open sandals.
- Thoroughly inspect the area where the equipment is to be used and remove all objects which may be thrown by the machine.
- Replace faulty silencers/mufflers.
- Before using, always visually inspect to see that the attachments are not worn or damaged. Replace worn or damaged components.

Safe Handling of Fuels

- To avoid personal injury or property damage, use extreme care in handling gasoline. Gasoline is extremely flammable and the vapors are explosive.
- Extinguish all cigarettes, cigars, pipes, and other sources of ignition.
- Use only an approved fuel container.
- Never remove fuel cap or add fuel with the engine running.
- Allow engine to cool before refueling.
- Never refuel the machine indoors.
- Never store the machine or fuel container where there is an open flame, spark, or pilot light such as on a water heater or on other appliances.
- Never fill containers inside a vehicle or on a truck or trailer bed with a plastic liner. Always place containers on the ground away from your vehicle before filling.
- Remove equipment from the truck or trailer and refuel it on the ground. If this is not possible, then refuel such equipment with a portable container, rather than from a fuel dispenser nozzle.
- Keep the nozzle in contact with the rim of the fuel tank or container opening at all times until fueling is complete. Do not use a nozzle lock open device.
- If fuel is spilled on clothing, change clothing immediately.
- Never overfill fuel tank. Replace fuel cap and tighten securely.

Operation

- Be alert, slow down and use caution when making turns. Look behind and to the side before changing directions.
- Engine exhaust contains carbon monoxide, which is an odorless, deadly poison that can kill you. Do not run engine indoors or in an enclosed area where fumes can collect.
- Operate only in daylight or in good artificial light.

- Lightning can cause severe injury or death. If lightning is seen or thunder is heard in the area, do not operate the machine; seek shelter.
- Before attempting to start the engine, disengage all attachment clutches and place the control levers in the neutral, locked position.
- When operating near drop-offs or bodies of water, do not use on slopes greater than 15 degrees.
- Use care when pulling loads or using heavy equipment.
  - Use only approved draw bar hitch points.
  - Limit loads to those you can safely control.
  - Do not turn sharply. Use care when reversing.
- Watch out for traffic when crossing or near roadways.
- When using any attachments, never direct discharge of material toward bystanders nor allow anyone near the machine while in operation. Some attachments, such as a snowthrower, are capable of amputating hands and feet and throwing objects
- Never operate the machine with damaged guards, shields, or without safety protective devices in place.
- Do not change the engine governor settings or overspeed the engine. Operating the engine at excessive speed may increase the hazard of personal injury.
- Before leaving the operators position:
  - disengage the power take off and lower the attachments;
  - place in neutral and set the parking brake;
  - stop the engine and remove the key.
- If an attachment should start to vibrate abnormally, stop the machine and check immediately for the cause.
- Disengage drive to attachments, stop the engine, set the parking brake and remove the ignition key:
  - before clearing blockages or unclogging chute;
  - before checking, cleaning or working on the attachment
  - after striking a foreign object. Inspect the attachment for damage and make repairs before restarting and operating the equipment;
  - if the machine starts to vibrate abnormally (check immediately).
- Disengage drive to attachments when transporting, not in use or any time the attachment is in the raised position.
- Stop the engine and disengage drive to attachment:
  - before refuelling;
  - before making height adjustment unless adjustment can be made from the operators position.
- Use only Toro approved attachments.

Slope Operation

- Remember there is no such thing as a safe slope. Travel on slopes requires particular care. To guard against overturning:
  - do not stop or start suddenly when on a slope;
  - use slow speeds on slopes and during tight turns;
  - stay alert for humps and hollows and other hidden hazards;
- Do not operate near drop-offs, ditches, steep banks or water. Tracks dropping over edges can cause roll overs, which may result in serious injury, death or drowning.
- Do not operate on slopes where slippery conditions could reduce traction and could cause sliding and loss of control.
- Do not make sudden turns or rapid speed changes.
- Reduce speed and use extreme caution on slopes.
- Remove or mark obstacles such as rocks, tree limbs, etc. from the operating area. Tall grass can hide obstacles.
- Watch for ditches, holes, rocks, dips, and rises that change the operating angle, as rough terrain could overturn the machine.
- Avoid sudden starts when operating uphill because the machine may tip backwards.
- Do not operate on ice incapable of supporting the weight of this machine.

Maintenance and Storage

- Keep all nuts, bolts and screws tight to be sure the equipment is in safe working condition.
- Never store the equipment with fuel in the tank inside a building where fumes may reach an open flame or spark.
- Allow the engine to cool before storing in any enclosure.
- To reduce the fire hazard, keep the engine, silencer/muffler, battery compartment and fuel storage area free of grass, leaves, or excessive grease.
- Replace worn or damaged parts for safety.
- If the fuel tank has to be drained, do this outdoors.
- When machine is to be parked, stored or left unattended, lower the attachment unless a positive mechanical lock is used.
- Use only genuine Toro replacement parts to ensure that original standards are maintained.

Hauling

- Use care when loading or unloading the machine into a trailer or truck.
- Use full width ramps for loading machine into trailer or truck.
- Tie the machine down securely using straps, chains, cable, or ropes. Both front and rear straps should be directed down and outward from the machine.

Safety and Instructional Decals

Safety decals and instructions are easily visible to the operator and are located near any area of potential danger. Replace any decal that is damaged or lost.

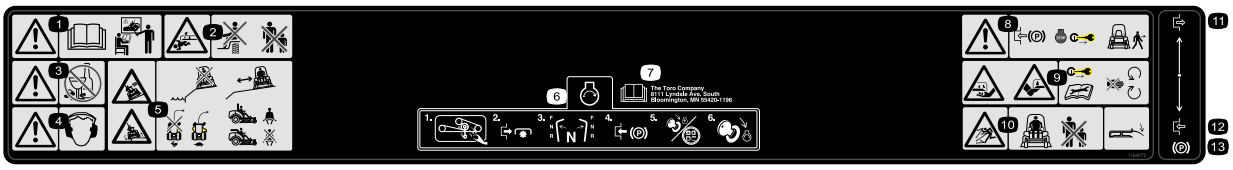

110-9772

1. Warning—read the *Operator's Manual* before operating and do not operate this machine unless you are trained.
2. Crushing/dismemberment hazard of bystanders—do not carry passengers, keep bystanders a safe distance from the machine.
3. Warning—do not use drugs or alcohol.
4. Warning—wear hearing protection.
5. Tipping, drop off hazard—do not operate near water drop-offs, stay a safe distance from drop-offs, slow machine before turning, do not turn at high speeds, wear a seat belt when a ROPS is in place, do not wear a seat belt when ROPS is lowered.
6. To start the engine: clear any debris from the attachment, disengage the PTO, move the motion control levers to the neutral position, engage the parking brake, turn the ignition to Run and wait for the glow plug light to turn off, turn the ignition key to Start.
7. Read the *Operator's Manual.*
8. Warning—engage the parking brake, stop the engine and remove the ignition key before leaving the machine.
9. Cutting hazard of hand or foot—remove the ignition key and read the instructions before servicing or performing maintenance, keep away from moving parts.
10. Thrown object hazard—keep bystanders a safe distance from the machine; keep all deflectors and shields in place.
11. Disengage
12. Engage
13. Parking brake

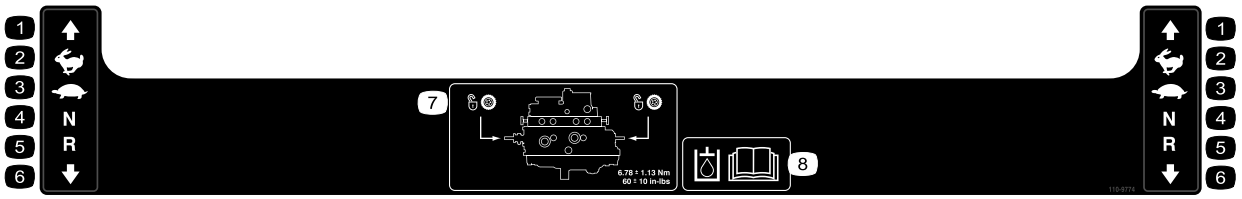

110-9774

1. Forward
2. Fast
3. Slow
4. Neutral
5. Reverse
6. Backward
7. Tow valve location; torque the tow valves to 6.78 ± 1.13 N·m (60 ± 10 in-lbs).
8. Read the *Operator's Manual* for more information on the hydraulic oil.

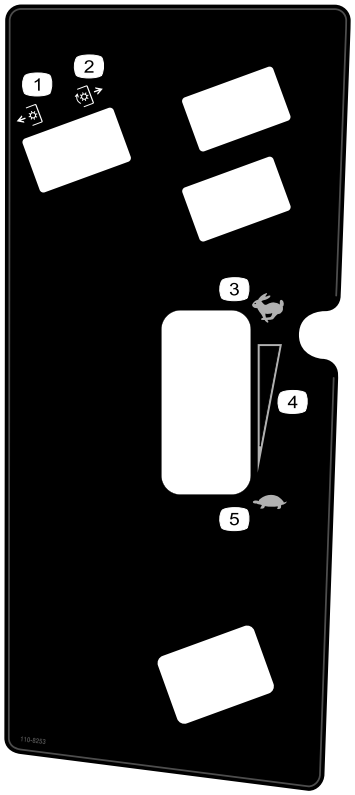

110-8253

1. PTO–Off
2. PTO—On
3. Fast
4. Continuous variable setting
5. Slow

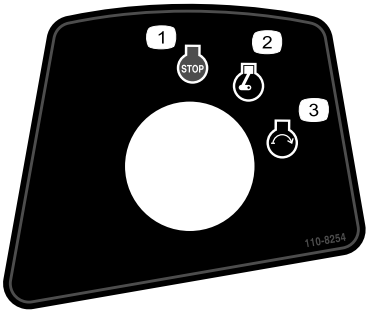

110-8254

1. Engine–Stop
2. Engine—Run
3. Engine—Start

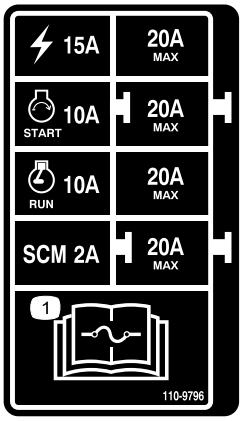

110-9796

1. Read the *Operator's Manual* for information on fuses.



106-6755

1. Engine coolant under pressure.
2. Explosion hazard—read the *Operator's Manual.*
3. Warning—do not touch the hot surface.
4. Warning—read the *Operator's Manual.*

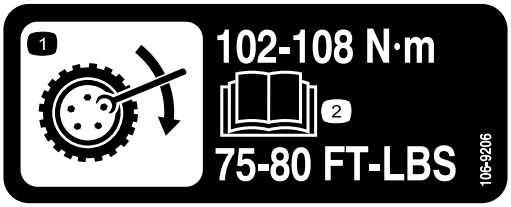

106-9206

1. Wheel torque specifications
2. Read the *Operator's Manual*.

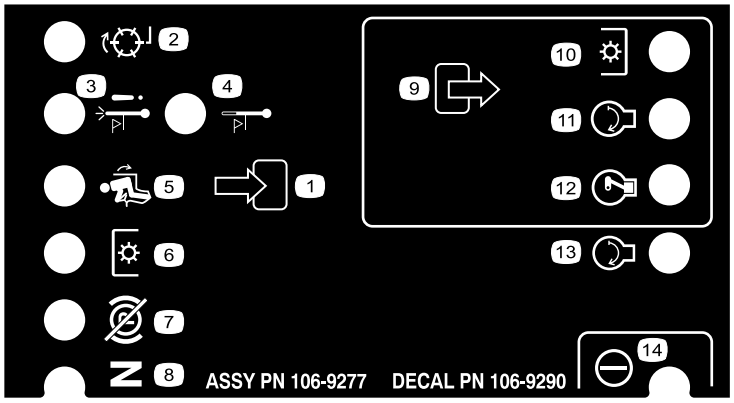

106-9290

1. Inputs
2. Not active
3. High temperature shutdown
4. High temperature warning
5. In seat
6. Power Take-off (PTO)
7. Parking brake Off
8. Neutral
9. Outputs
10. Power Take Off (PTO)
11. Start
12. Energize to Run (ETR)
13. Start
14. Power

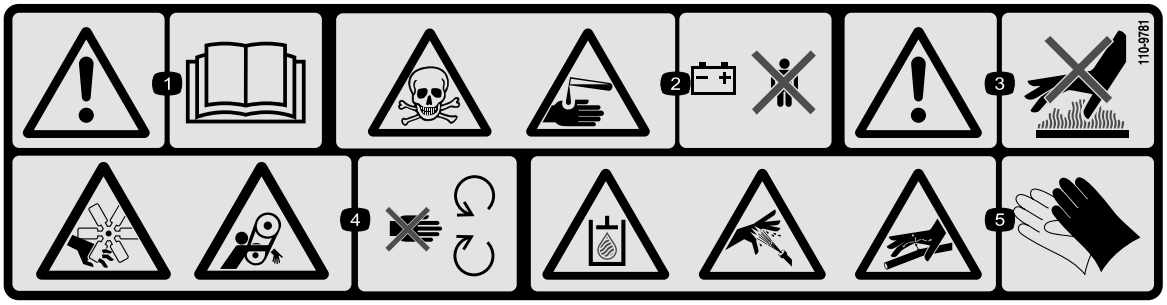

110-9781

1. Warning—read the *Operator's Manual.*
2. Poison and caustic liquid/chemical burn hazard—keep children a safe distance from the battery.
3. Warning—do not touch the hot surface.
4. Cutting/dismemberment hazard, fan and entanglement hazard, belt—stay away from moving parts.
5. Hydraulic oil in system under pressure, escaping hydraulic oil penetrating skin hazard, broken hydraulic lines hazard—wear protective hand protection when handling hydraulic system components.

Setup

Loose Parts

Use the chart below to verify that all parts have been shipped.

Procedure	Description	Qty.	Use
1	No parts required	–	Check the hydraulic fluid, engine oil, and coolant levels.
2	No parts required	–	Activate and charge the battery
3	Mower Deck or Polar Trac Kit (sold separately)	1	Install the mower deck/Polar Trac.

Media and Additional Parts

Description	Qty.	Use
Operator's Manual	1	Read before operating the machine.
Engine Operator's Manual	1	Read before operating the machine.
Parts Catalog	1	Use to lookup and order parts.
Operator Training Materials	1	View before operating the machine.
Engine warranty	1	Save for future use.

1

Checking Fluid Levels

No Parts Required

Procedure

1. Check the hydraulic fluid level before starting the engine, refer to Checking the Hydraulic Fluid Level in Hydraulic System Maintenance.
2. Check the engine oil level before and after starting the engine, refer to Checking the Engine Oil Level in Engine Maintenance.
3. Check the cooling system before starting the engine; refer to Checking the Cooling System in Cooling System Maintenance.

2

Activating and Charging the Battery

No Parts Required

Procedure

Use only electrolyte (1.265 Specific Gravity) to fill battery initially.

1. Remove the battery from the machine.

   Important: Do not add electrolyte while the battery is in the machine. You could spill it, causing corrosion.

2. Clean the top of the battery and remove the vent caps (Figure 3).

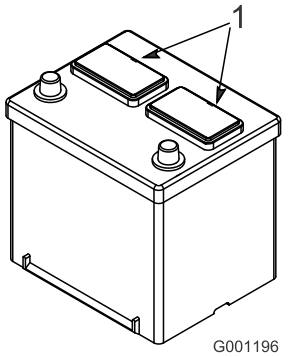

Figure 3

1. Vent caps

3. Carefully fill each cell with electrolyte until the plates are covered with about 1/4 inch (6 mm) of fluid (Figure 4).

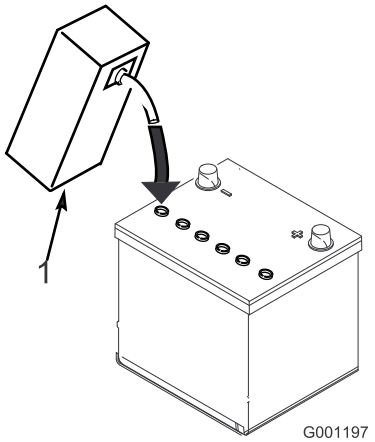

Figure 4

1. Electrolyte

4. Allow approximately 20 to 30 minutes for the electrolyte to soak into the plates. Refill as necessary to bring the electrolyte to within about 6 mm (1/4 inch) of the bottom of the fill well (Figure 4).

⚠ WARNING

Charging the battery produces gasses that can explode.

Never smoke near the battery and keep sparks and flames away from battery.

5. Connect a 3 to 4 amp battery charger to the battery posts. Charge the battery at a rate of 3 to 4 amps until the specific gravity is 1.250 or higher and the temperature is at least 16° C (60° F.) with all cells gasing freely.
6. When the battery is charged, disconnect the charger from the electrical outlet and battery posts.

   Note: After the battery has been activated, add only distilled water to replace normal loss, although maintenance-free batteries should not require water under normal operating conditions.

WARNING

CALIFORNIA
Proposition 65 Warning

Battery posts, terminals, and related accessories contain lead and lead compounds, chemicals known to the State of California to cause cancer and reproductive harm. Wash hands after handling.

⚠ WARNING

Battery terminals or metal tools could short against metal tractor components causing sparks. Sparks can cause the battery gasses to explode, resulting in personal injury.

- **When removing or installing the battery, do not allow the battery terminals to touch any metal parts of the tractor.**
- **Do not allow metal tools to short between the battery terminals and metal parts of the tractor.**

7. Install the battery into the machine and secure it.

   Important: The battery must not be able to move or wiggle when pushed.

8. First, install the positive cable (red) to the positive (+) terminal and then the negative cable (black) to the negative (-) terminal of the battery. Slide the rubber boot over the positive terminal to prevent a possible short from occurring.

⚠ WARNING

Incorrect battery cable routing could damage the machine and cables causing sparks. Sparks can cause the battery gasses to explode, resulting in personal injury.

- **Always disconnect the negative (black) battery cable before disconnecting the positive (red) cable.**
- **Always connect the positive (red) battery cable before connecting the negative (black) cable.**

⚠ WARNING

Connecting cables to the wrong post could damage the electrical system and result in personal injury.

Note: Ensure that the battery cables are routed away from any sharp edges or moving parts.

3

Installing the Mower Deck/Polar Trac

Parts needed for this procedure:

1	Mower Deck or Polar Trac Kit (sold separately)

Installing a Mower Deck Kit

1. Remove the traction unit from the shipping pallet.
2. Place a jack stand under each wheel motor and a floor jack under the rear bumper (Figure 5), or suspend from a over head hoist.

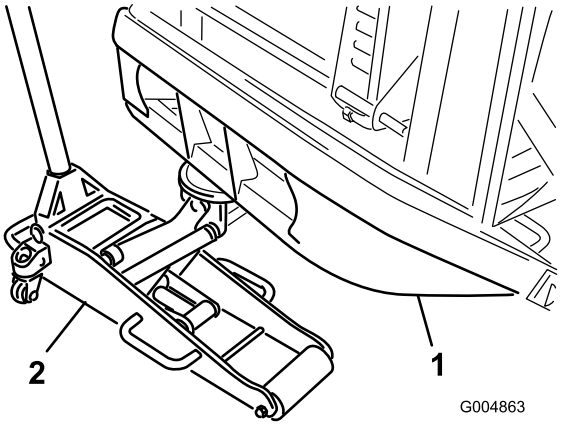

Figure 5

1. Rear bumper
2. Floor jack

3. Install the summer drive tires (Figure 6)

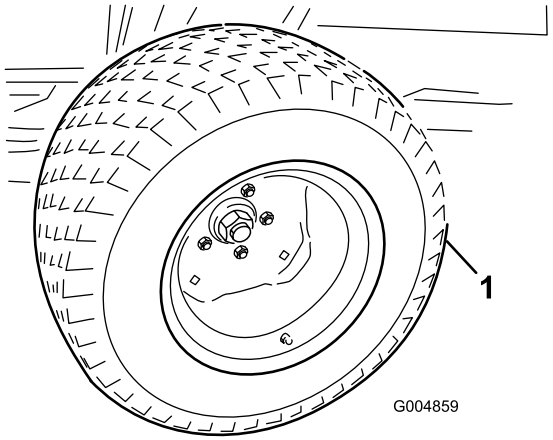

Figure 6

1. Summer drive tire

4. Roll the summer deck and frame into position and install the five 3/4 inch bolts, washers and nuts that connect the deck frame to the rear frame (Figure 7).

Remove the lift cylinder pins to gain access to the bolts on the right hand side. Torque the bolts to 265 foot pounds.

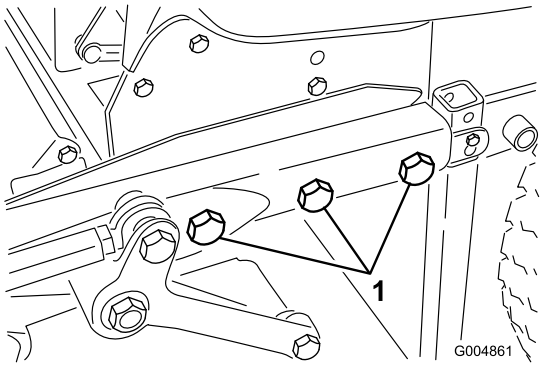

Figure 7

1. 3 mounting bolts (3/4 inch), washers and nuts (Left side)

5. Remove the fasteners securing the vertical tube support assemblies to the rear of the deck frame (Figure 8) or to the conversion brackets (Figure 9). Also, remove the conversion brackets from the deck frame, if applicable.

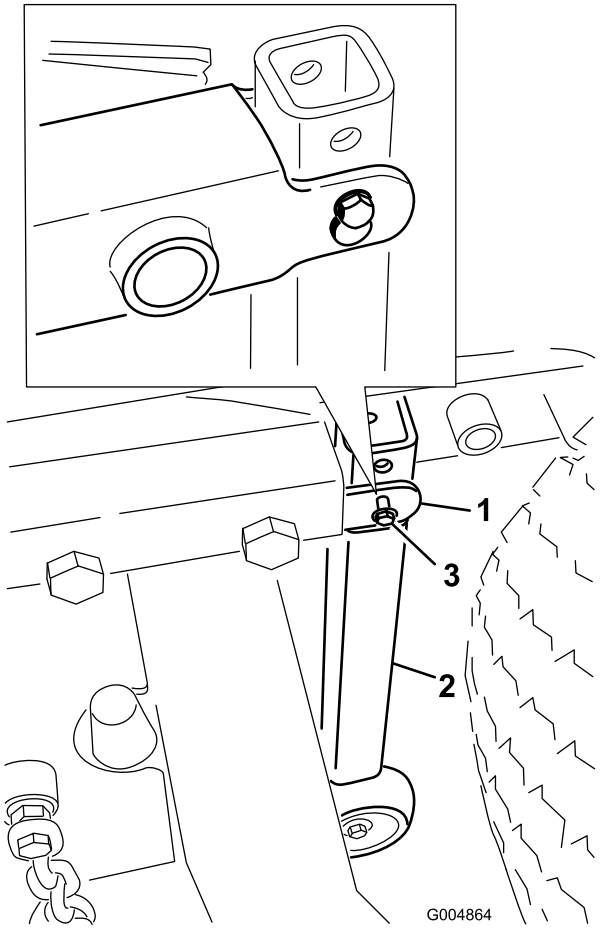

Figure 8

1. Deck frame
2. Vertical tube support
3. Clevis pin & screw pin retainer

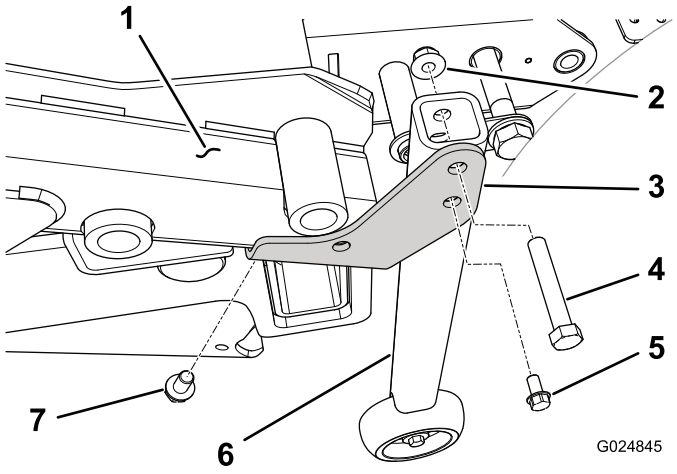

Figure 9

1. Deck frame
2. Flange nut
3. Conversion bracket (left side shown
4. Screw
5. Self tapping screw
6. Vertical tube support assembly
7. Self tapping screw

6. Pivot open the floor plate (Figure 10).

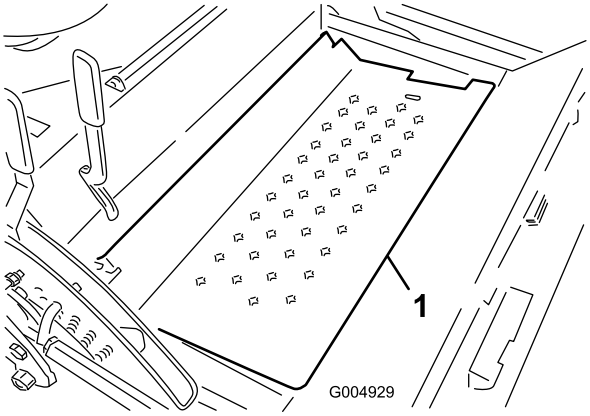

Figure 10

1. Floor plate

7. Slide the drive shaft onto the gearbox shaft (Figure 11). Install the roll pin and torque the bolts to 20-25 N-m (175-225 in-lb).

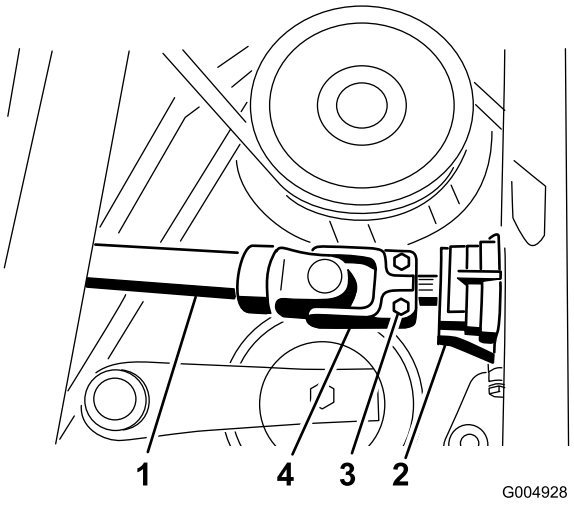

Figure 11

1. Drive shaft
2. Gear box
3. Bolt
4. Roll pin

8. Route and connect the hydraulic pressure and tank hoses to the valve (Figure 12).

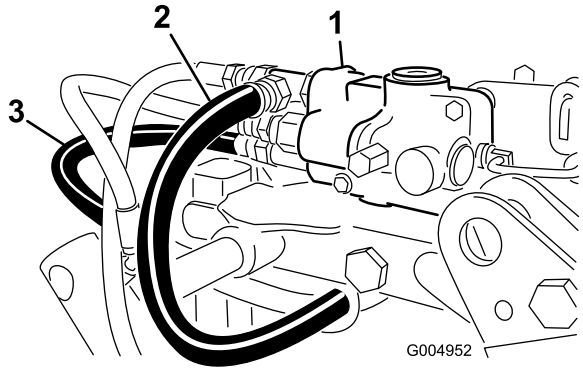

Figure 12

1. Control valve
2. Tank hose
3. Pressure hose

9. Install the rear of the deck lift cylinder onto the pivot pin and secure with the retaining ring (Figure 13).
10. Secure the front of the lift cylinder to the mower frame with the cylinder pin and screw (Figure 13).

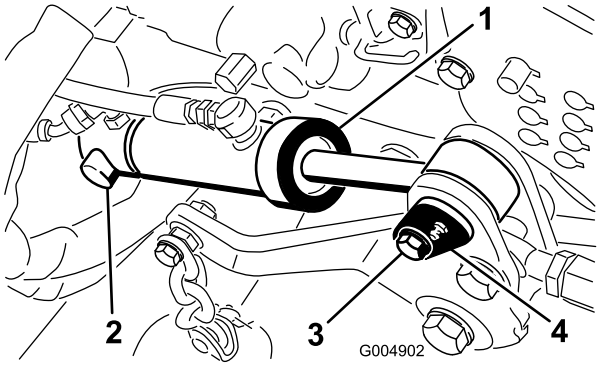

Figure 13

1. Deck lift cylinder
2. Retaining ring
3. Screw
4. Cylinder pin & screw

11. Position the ROPS assembly onto the ROPS posts. Install the bolt, nut, hair pin cotter and pin securing each ROPS assembly to the ROPS posts (Figure 14).

Note: If installing an allied suppliers mower deck, ROPS Kit, part no. 117– 9179 must be installed.

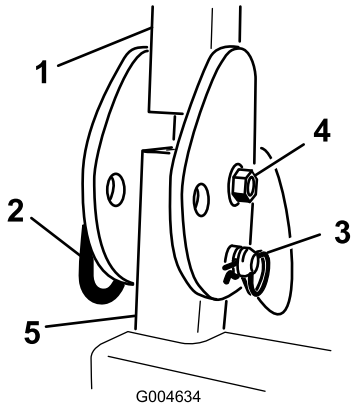

Figure 14

1. ROPS
2. Pin
3. Cotter pin
4. Bolt & nut
5. ROPS post

12. Start the machine, raise and lower the deck. Check for leaks and make sure the hoses do not rub against the frame.

Installing the Polar Trac Kit

1. Remove the traction unit from the shipping pallet.
2. Place a jack stand under each wheel motor and a floor jack under the rear bumper (Figure 15) or suspend from a over head hoist.

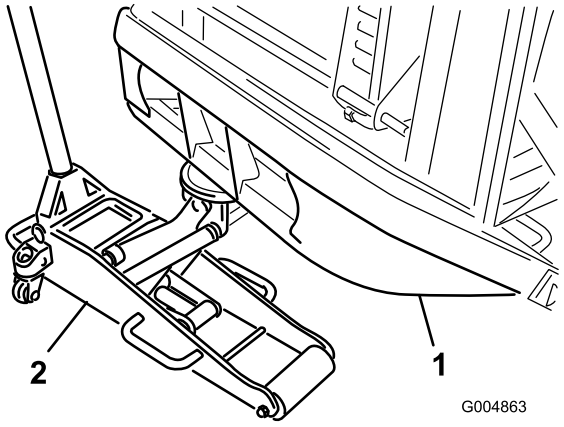

Figure 15

1. Rear bumper
2. Floor jack

3. Remove the two screws securing the winter frame floor plate cover to the floor and remove the plate (Figure 16).

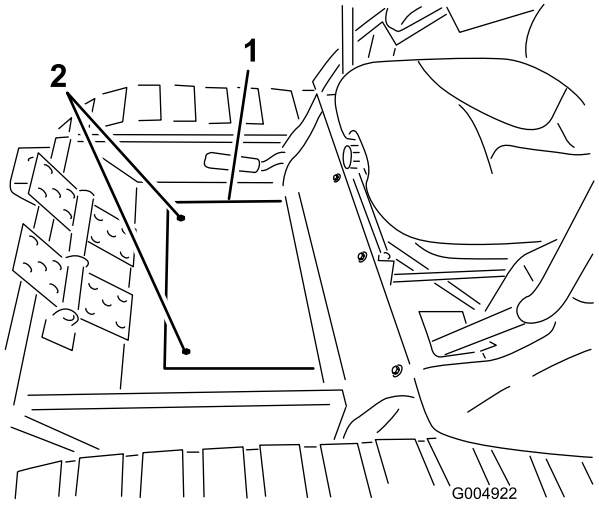

Figure 16

1. Floor plate cover
2. Mounting screws

4. Carefully roll the winter frame assembly into position while routing the drive shaft through the frame tube (Figure 17).

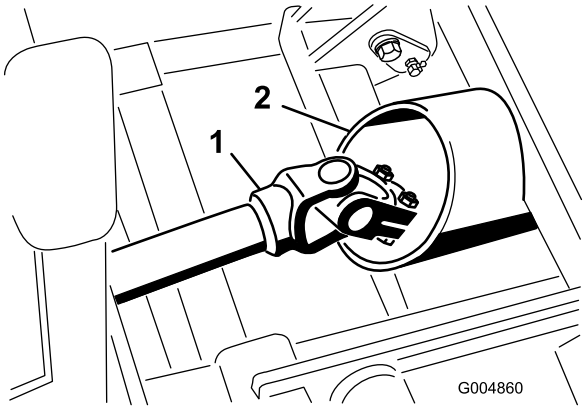

Figure 17

1. Drive shaft
2. Frame tube

Note: If the rear of the cab is not high enough to clear the control handles, evenly tighten the jacking bolts on each side of the cab jack tube to raise the rear of the cab (Figure 18).

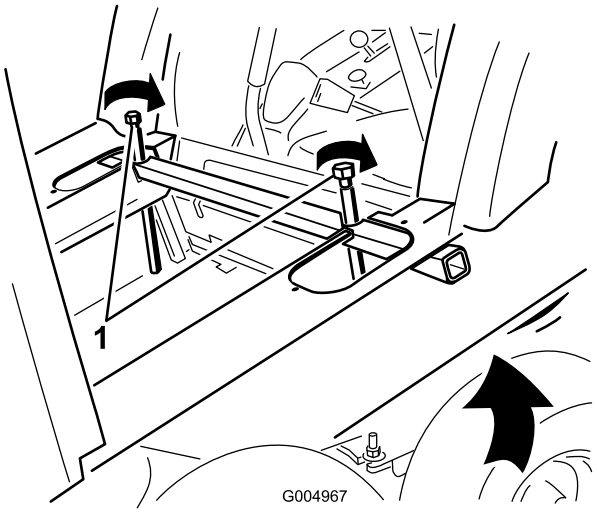

Figure 18

1. Jacking bolts

5. Route the hoses as follows:
   - Route the tank hose under the lift cylinder and between the cylinder mounting brackets to the valve (Figure 19).
   - Route the pressure hose along side the PTO shaft to the valve (Figure 19).

Note: To emphasis the hose routing, the hoses are shown without the hose covers installed.

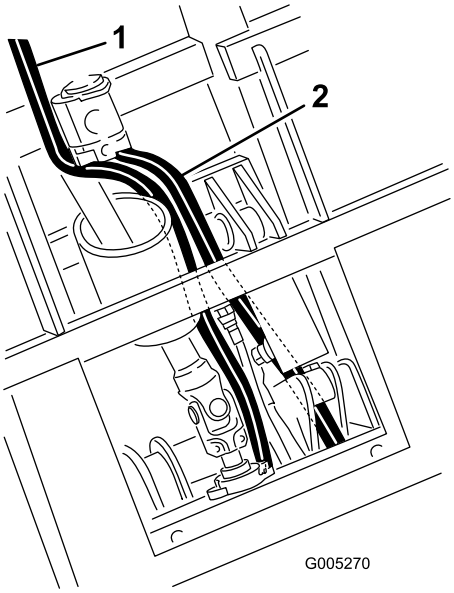

Figure 19

1. Tank hose
2. Pressure hose

6. Connect the drive shaft to the gear box shaft in the winter frame and torque the bolts (5/16 inch) to 20 to 25 N-m (175-225 in-lb). Install the roll pin (Figure 20).

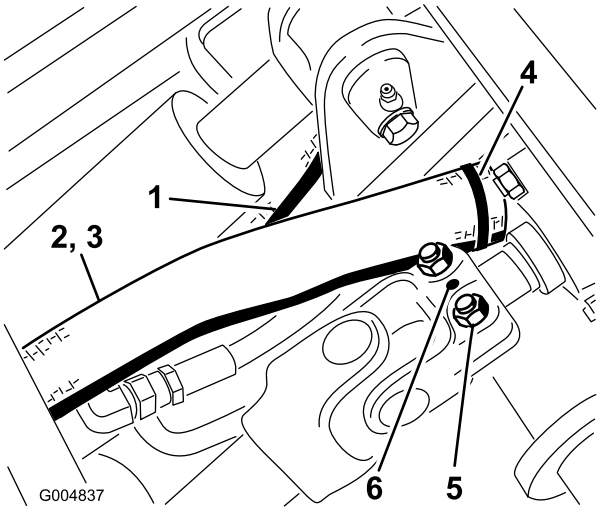

Figure 20

1. Pressure hose
2. Tank hose
3. Hose cover
4. Cable tie
5. Bolts
6. Roll pin

7. Adjust the floor jack to line up the 1.00 inch holes in the frame and install a coupler pin on each side (Figure 21).

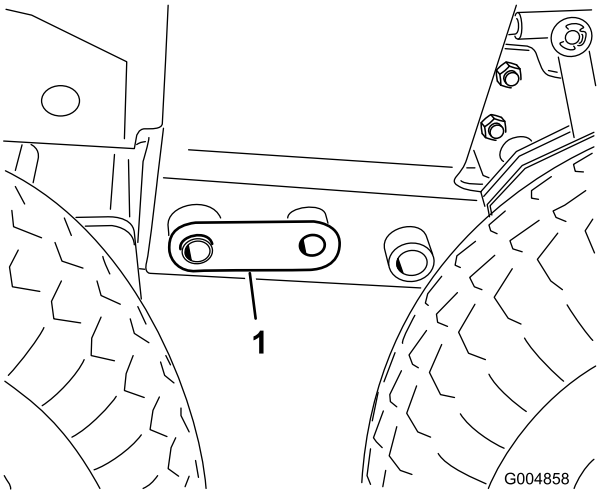

Figure 21

1. Coupler pin

8. Adjust the floor jack or rock the cab with your hands as required to install the bolts (3/4 inch) on each side (Figure 22). Torque the bolts to 359 N-m (265 ft-lb).

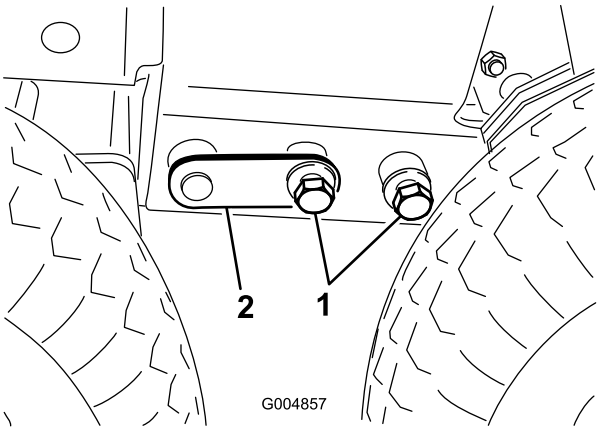

Figure 22

1. 3/4 inch bolts
2. Coupler pin

Note: The rear tires will need to be removed to torque the rear bolts (3/4 inch). After torquing the frame bolts, install the rear tires and torque lug nuts to 88 to 115 N-m (65 to 85 ft-lb).

9. Insert a rubber mount onto each cab mount at the rear mounting locations (Figure 23).

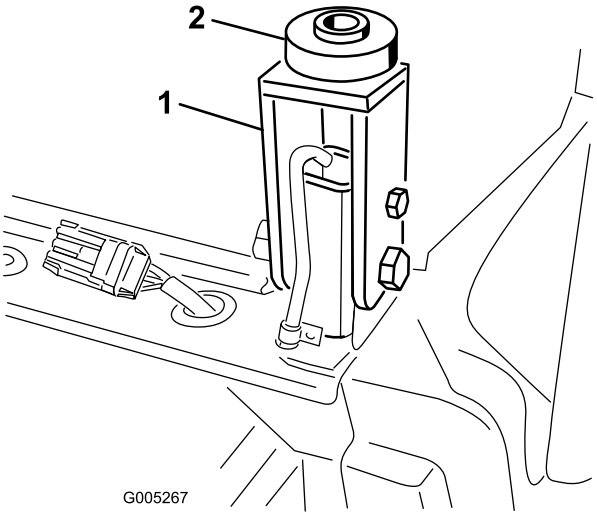

Figure 23

1. Cab mount
2. Rubber mount

10. Lower the cab into position by slowly and evenly loosening the jacking bolts on each end of the jacking tube (Figure 24).

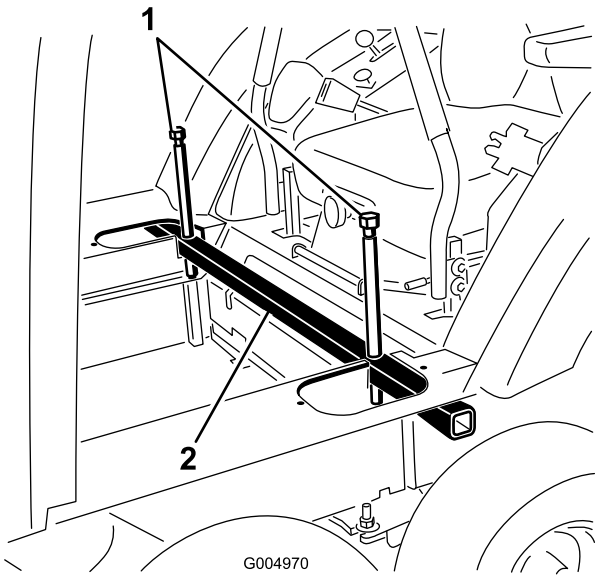

Figure 24

1. Jacking bolts
2. Cab jack tube

11. At the rear mounting points, secure the cab to the machine with a bolt (1/2 x 3 inches), steel washer (1/2 x 2–1/2 inches), rubber washer (1/2 x 2–1/2 inches) and nut (1/2 inch) (Figure 25). Tighten all four cab mount bolts until the rubber mounts are compressed to a thickness of 2.2 cm (7/8 inch).

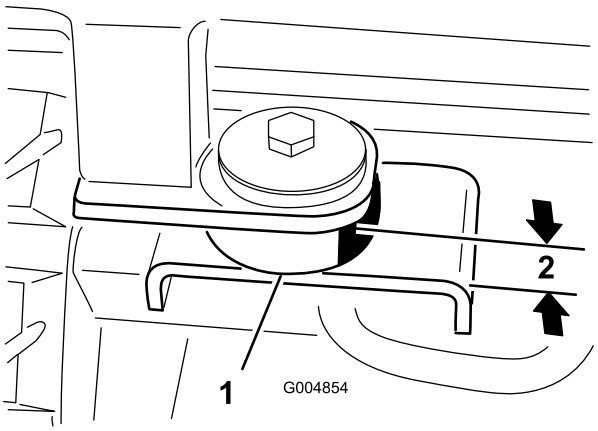

Figure 25

1. Rubber mount
2. 2.2 cm (0.875 inch)

12. Tighten the bolts and nuts securing the rear cab mounts to the ROPS posts (Figure 26). Adjust the floor jack if the bolts are binding and difficult to remove.

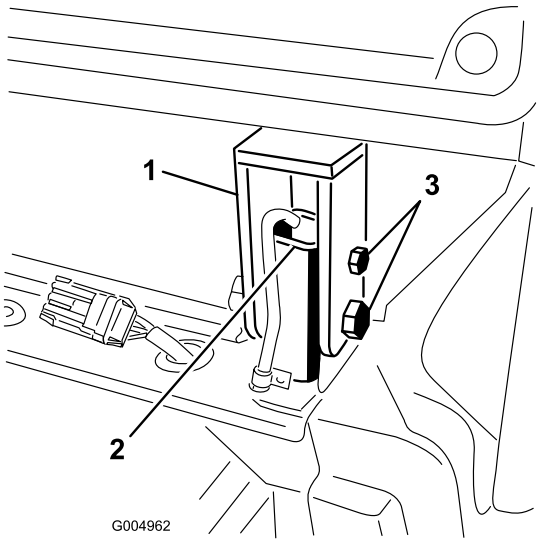

Figure 26

1. Cab mount
2. ROPS post
3. Bolts & nuts
4. ROPS post

13. Loosen the jacking bolts and remove the cab jack tube from the cutouts in the cab floor (Figure 27).

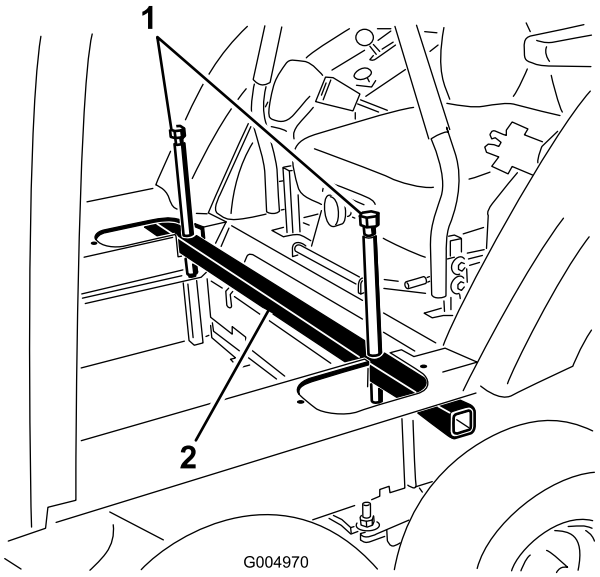

Figure 27

1. Jacking bolts
2. Cab jack tube

14. Connect the hydraulic pressure hose to the valve hard line and the tank hose to the valve (Figure 28). Retain the hose plugs for the summer change over.

    Note: Make sure the hoses are note kinked or are rubbing against any moving parts.

    Note: Adjust the angle of the fittings to accommodate the routing of the hoses.

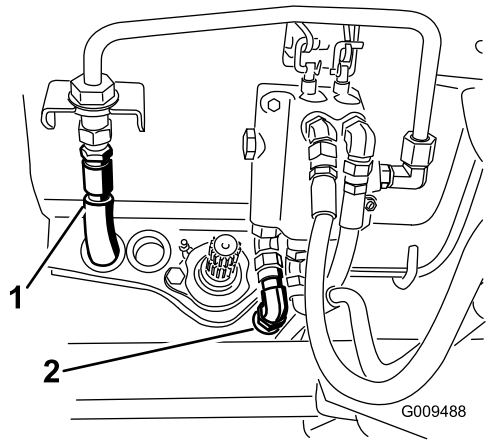

Figure 28

1. Pressure hose
2. Tank hose

15. Raise the rear of the machine until 2 jack stands can be positioned under the rear tube at a height that supports the rear tires 2.5 to 7.5 cm (1 to 3 inches) off of the ground.
16. Lower the floor jack so the rear frame rests on the jack stands. Position the floor jack under the center of the front lift arm pivot tube.
17. Remove the flat washer (1/2 inch) and nut (1/2 inch) installed on the stud on the bogie pivot (Figure 29).

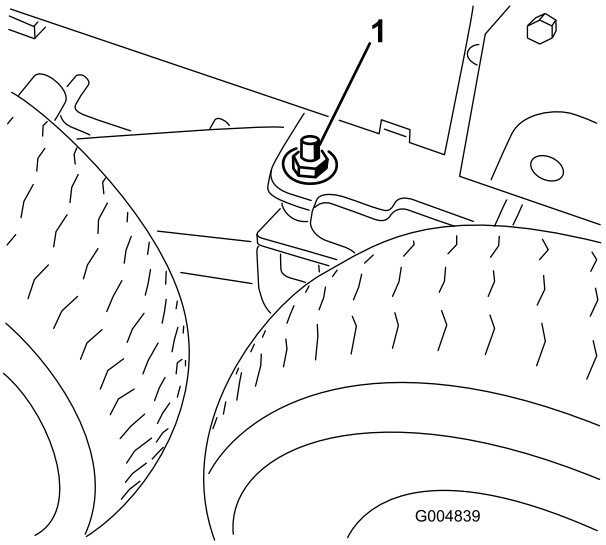

Figure 29

1. Washer & nut on the bogie pivot stud

18. Raise the floor jack until the front tires are off of the ground high enough to install the track beneath them and support the frame with jack stands.
19. Remove the front and center tires from the winter assembly (Figure 30).

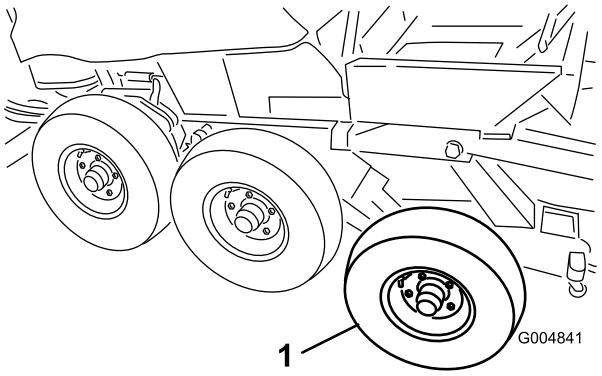

Figure 30

1. Front tire

20. Carefully lift the tracks over the rear wheel and front hubs. The direction of the track rotation is printed on the track. The V design in the rubber track must point forward.

⚠ CAUTION

The track guides have many pinch points. Carefully grasp the rubber track on the outer edges outboard of the steel guides when moving the track.

21. Adjust the floor jack to a suitable height to install the front tire. With a helper, lift the front of the track enough to carefully install the front tires (Figure 31).

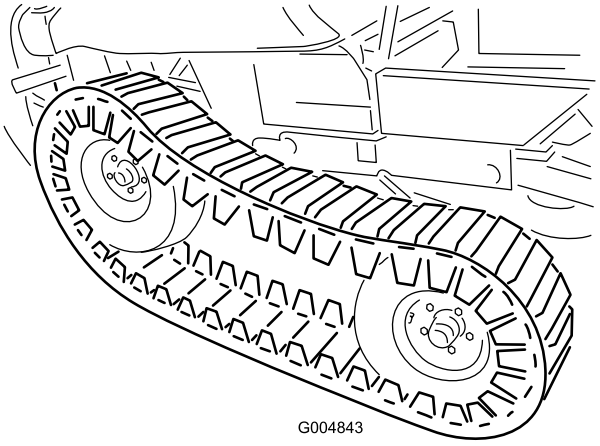

Figure 31

22. Adjust the floor jack to a suitable height to install the center tire. Lift the center of the track enough to install the center tire. Torque the lug nuts to 88 to 115 N-m (65 to 85 ft-lb).

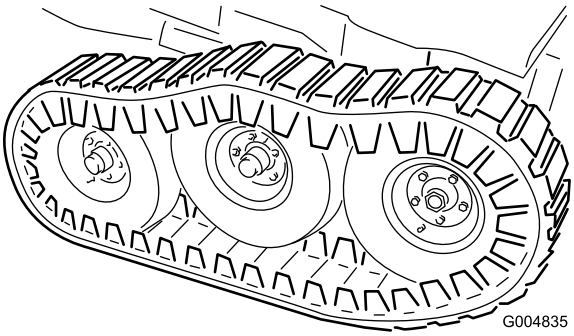

Figure 32

23. Lower the floor jack until the front wheels support the frame. Install the flat washers (1/2 inch) and locknuts on the bogie pivot stud (Figure 29) and torque to 102 N-m (75 ft-lb).

    Note: You may need to move the floor jack to the rear bumper to raise the rear of the machine high enough to install the flat washer and locknut.

24. Install the side access covers with the screws previously removed (Figure 33).

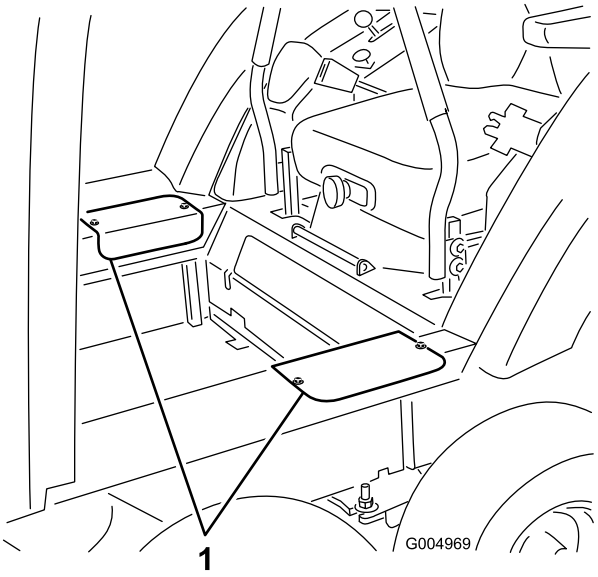

Figure 33

1. Access covers

25. Install the winter frame floor plate cover to the floor with the screws previously removed (Figure 34).

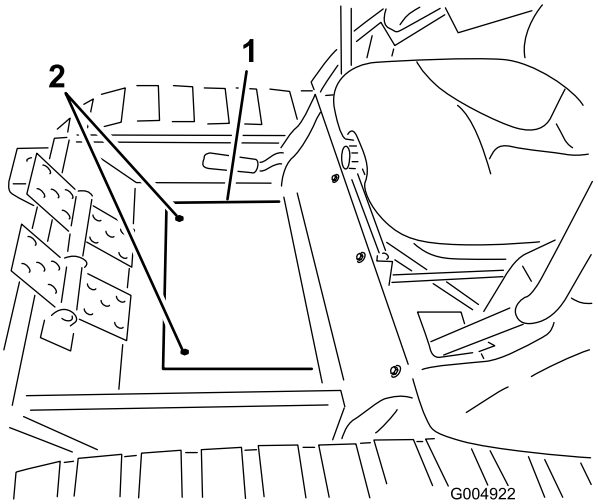

Figure 34

1. Floor plate cover
2. Mounting screws

26. Connect the cab pressure and return hoses to the quick couplers on the rear frame mount (Figure 35).

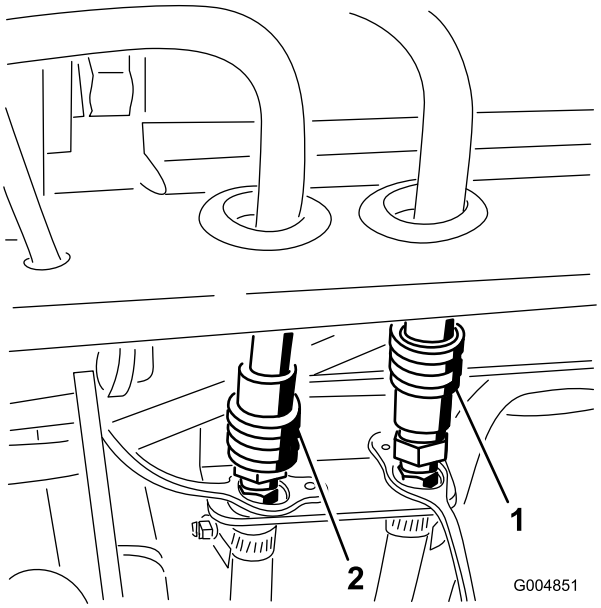

Figure 35

1. Pressure hose
2. Return hose

27. Remove the cap and plug the cab wire harness connector into the harness on the rear frame mount (Figure 36).

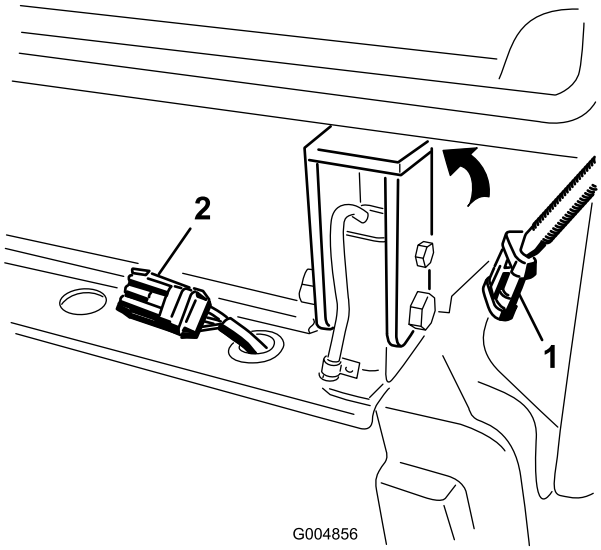

Figure 36

1. Cab wire harness connector
2. Harness connector on the rear frame mount

28. Start the machine. Run the lift arm up and down and check for hydraulic leaks. Check the antifreeze level and replenish as required.

Product Overview

Controls

Become familiar with all the controls before you start the engine and operate the machine (Figure 37).

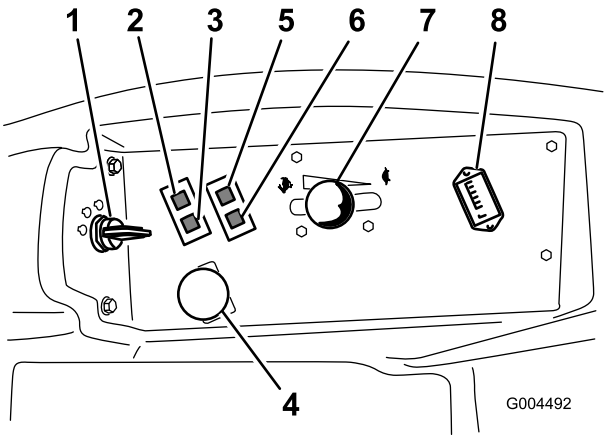

Figure 37

Tractor Control Panel

1. Ignition switch
2. Engine coolant temperature warning light
3. Glow plug light
4. Power take off (PTO) Switch
5. Oil pressure warning light
6. Charge indicator light
7. Throttle lever
8. Hour meter

Motion Control Levers

The motion control levers control the forward and rearward motions as well as the turning of the machine.

Parking Brake Lever

Whenever the engine is shut off, engage the parking brake to prevent accidental movement of the machine. To engage the parking brake, pull the parking brake lever rearward and up (Figure 38). To release the parking brake, push the parking brake lever forward and down.

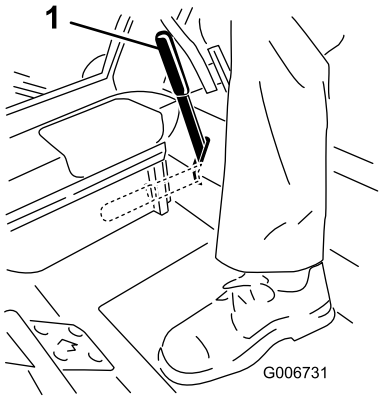

Figure 38

1. Parking brake lever

⚠ CAUTION

Do not park the machine on a slope.

Ignition Switch

The ignition switch has three positions: Off, On/Preheat, and Start.

Throttle Lever

The throttle lever controls the speed of the engine. Moving the throttle lever forward toward the Fast position increases the engine speed. Moving it rearward toward the Slow position decreases the engine speed. The throttle, in conjunction with motion control levers, controls ground speed of the machine. Always run the machine with the throttle in the Fast position when using attachments.

Power Take Off (PTO) Switch

The power take off (PTO) switch starts and stops powered attachments.

Hour Meter

The hour meter records the number of hours the engine has operated. It operates when the key switch is in the Run position. Use these times for scheduling regular maintenance.

Glow Plug Light (Orange Light)

The glow plug indicator light turns on when the ignition switch is turned to the On position. It remains lit for 6 seconds. When the light turns off, the engine is ready to be started.

Engine Coolant Temperature Warning Light

This light glows and the powered attachments will stop if the engine coolant temperature is high. But the engine will continue to run. If the machine is not stopped and the coolant temperature rises another 20° F, the engine will stop.

Important: If the attachment shuts down and the temperature warning light is on, push PTO knob down, drive to a safe flat area, move the throttle lever to the Slow position, move the motion control levers into the neutral locked position, and engage the parking brake. Allow the engine to idle for several minutes while it cools to a safe level. Stop the engine and check the cooling system; refer to Checking the Cooling System in Cooling System Maintenance.

Charge Indicator

Illuminates when the system charging circuit malfunctions.

Oil Pressure Warning Light

The oil pressure warning light glows when the oil pressure in the engine drops below a safe level. If low oil pressure ever occurs, stop the engine and determine the cause. Repair the damage before starting the engine again.

Fuel Gauge

The fuel gauge (Figure 39) indicates the quantity of fuel remaining in the fuel tanks.

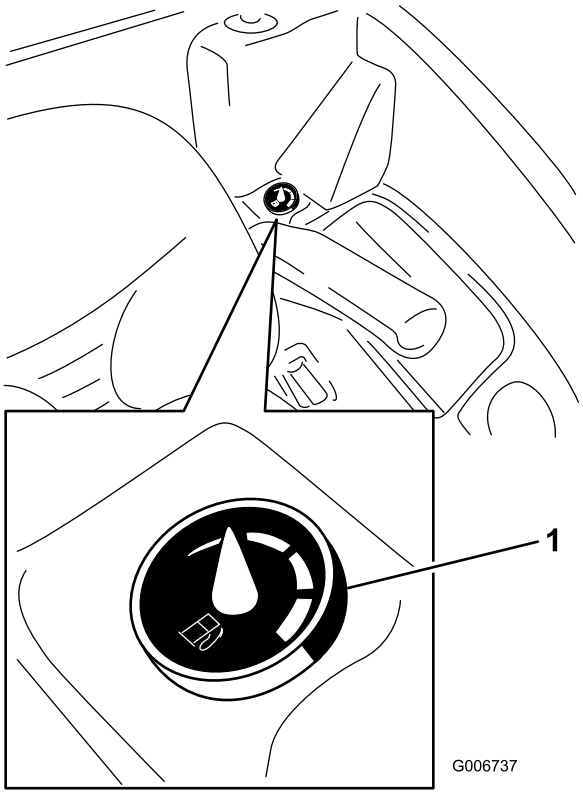

Figure 39

1. Fuel gauge

Operation

Note: Determine the left and right sides of the machine from the normal operating position.

Adding Fuel

The engine runs on clean, fresh diesel fuel with a minimum octane rating of 40. Purchase fuel in quantities that can be used within 30 days to ensure fuel freshness.

Combined tank capacity: 43.5 liters (11.5 US gallons)

Use summer grade diesel fuel (No. 2-D) at temperatures above -7° C (20° F) and winter grade diesel fuel (No. 1-D or No. 1-D/2-D blend) below -7° C (20° F). Use of winter grade diesel fuel at lower temperatures provides lower flash point and pour point characteristics, therefore easing starting and lessening chances of chemical separation of the fuel due to lower temperatures (wax appearance, which may plug filters).

Use of summer grade diesel fuel above -7° C (20° F) will contribute toward longer life of the pump components.

Important: Do not use kerosene or gasoline instead of diesel fuel. Failure to observe this caution will damage the engine.

⚠ WARNING

Fuel is harmful or fatal if swallowed. Long-term exposure to vapors can cause serious injury and illness.

- **Avoid prolonged breathing of vapors.**
- **Keep face away from nozzle and gas tank or conditioner opening.**
- **Keep fuel away from eyes and skin.**

Biodiesel Ready

This machine can also use a biodiesel blended fuel of up to B20 (20% biodiesel, 80% petrodiesel). The petrodiesel portion should be low or ultra low sulfur. Observe the following precautions:

- The biodiesel portion of the fuel must meet specification ASTM D6751 or EN14214.
- The blended fuel composition should meet ASTM D975 or EN590.
- Painted surfaces may be damaged by biodiesel blends.
- Use B5 (biodiesel content of 5%) or lesser blends in cold weather.
- Monitor seals, hoses, gaskets in contact with fuel as they may be degraded over time.
- Fuel filter plugging may be expected for a time after converting to biodiesel blended.
- Contact your distributor if you wish for more information on biodiesel.

⚠ DANGER

In certain conditions, fuel is extremely flammable and highly explosive. A fire or explosion from fuel can burn you and others and can damage property.

- **Fill the fuel tank outdoors, in an open area, when the engine is cold. Wipe up any fuel that spills.**
- **Never fill the fuel tank inside an enclosed trailer.**
- **Never smoke when handling fuel, and stay away from an open flame or where fuel fumes may be ignited by a spark.**
- **Store fuel in an approved container and keep it out of the reach of children. Never buy more than a 30-day supply of fuel.**
- **Do not operate without entire exhaust system in place and in proper working condition.**

⚠ DANGER

In certain conditions during fueling, static electricity can be released causing a spark which can ignite the fuel vapors. A fire or explosion from fuel can burn you and others and can damage property.

- **Always place fuel containers on the ground away from your vehicle before filling.**
- **Do not fill fuel containers inside a vehicle or on a truck or trailer bed because interior carpets or plastic truck bed liners may insulate the container and slow the loss of any static charge.**
- **When practical, remove equipment from the truck or trailer and refuel the equipment with its wheels on the ground.**
- **If this is not possible, then refuel such equipment on a truck or trailer from a portable container, rather than from a fuel dispenser nozzle.**
- **If a fuel dispenser nozzle must be used, keep the nozzle in contact with the rim of the fuel tank or container opening at all times until fueling is complete.**

Filling the Fuel Tank

1. Park the machine on a level surface.

   Important: The fuel tanks are connected, but the fuel does not transfer quickly from one tank to the other. It is important when filling that you park on a level surface. If you park on a hill, you may inadvertently overfill the tanks.

2. Shut the engine off and set the parking brake.

3. Clean around each fuel tank cap and remove the cap.

   Important: Do not open the fuel tanks when parked on a hill. The fuel could spill out.

4. Add fuel to both fuel tanks, until the level is even with the bottom of the filler neck (Figure 40). **Do not over fill the fuel tanks.**

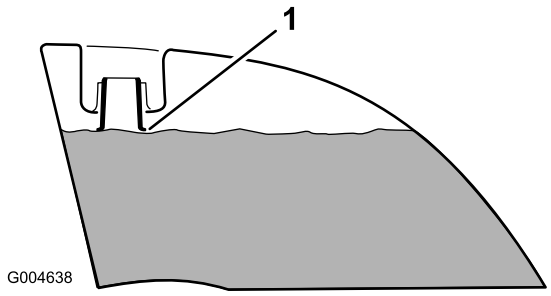

Figure 40

1. Bottom of the filler neck

5. Install the fuel tank caps securely. Wipe up any fuel that may have spilled.

Note: If possible, fill the fuel tanks after each use. This will minimize possible buildup of condensation inside the fuel tank.

Checking the Engine Oil Level

Before you start the engine and use the machine, check the oil level in the engine crankcase; refer to Checking Oil Level in Engine Maintenance.

Checking the Cooling System

Before you start the engine and use the machine, check the cooling system; refer to Checking the Cooling System in Cooling System Maintenance.

Checking the Hydraulic System

Before you start the engine and use the machine, check the hydraulic system; refer to Checking the Hydraulic System in Hydraulic System Maintenance.

Think Safety First

Please read all safety instructions and symbols in the safety section. Knowing this information could help you or bystanders avoid injury.

⚠ DANGER

Operating on icy or steep slopes can cause sliding and loss of control.

A track dropping over an edge can cause a rollover, which may result in serious injury, death, or drowning.

Always use the seat belt.

Read and follow the rollover protection instructions and warnings.

To avoid loss of control and possibility of rollover:

- **Do not operate near drop-offs or near water.**
- **Reduce speed and use extreme caution on slopes.**
- **Avoid sudden turns or rapid speed changes.**

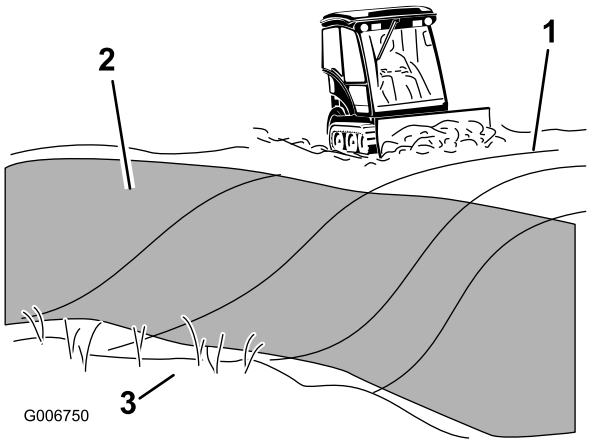

Figure 41

1. Safe Zone
2. Use walk behind equipment near drop-offs and water.
3. Water/unsafe ice

⚠ CAUTION

This machine produces sound levels in excess of 85 dBA at the operators ear and can cause hearing loss through extended periods of exposure.

Wear hearing protection when operating this machine.

The use of protective equipment for eyes, ears, feet, and head is recommended.

Operating the Parking Brake

Always set the parking brake when you stop the machine or leave it unattended.

Setting the Parking Brake

1. Move the motion control levers (Figure 46) out to the neutral locked position.
2. Pull up and back on the parking brake lever to set the parking brake (Figure 42). The parking brake lever should stay firmly in the engaged position.

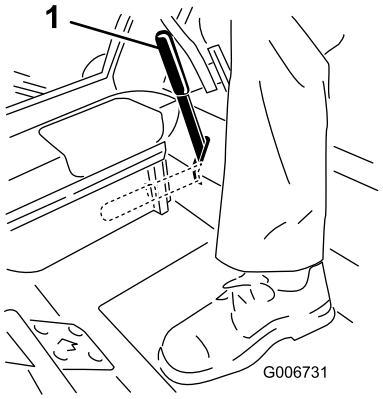

Figure 42

1. Parking brake lever

⚠ WARNING

The parking brake may not hold the machine parked on a slope and could cause personal injury or property damage.

Do not park on slopes unless the tracks are chocked or blocked

Releasing the Parking Brake

Push forward and down on the parking brake lever to release the parking brake (Figure 42).

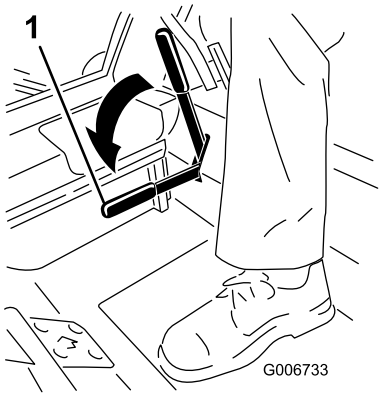

Figure 43

1. Parking brake lever

Starting the Engine

1. Sit on the seat and fasten the seat belt.
2. Ensure that the motion controls are in the neutral locked position.
3. Set the parking brake; refer to Setting the Parking Brake.
4. Move the PTO (power take off) switch to the off position (Figure 44).

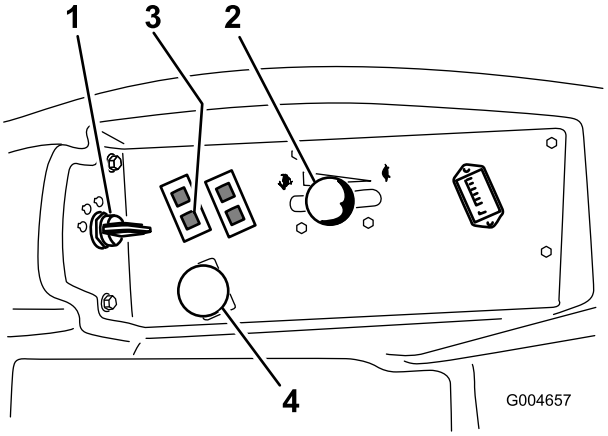

Figure 44

1. Ignition switch
2. Throttle control
3. Glow plug light
4. Power take off switch (PTO)

5. Move the throttle lever midway between the Fast and Slow positions (Figure 44).
6. Turn the ignition key clockwise to the Run position (Figure 45).

   The glow plug light will turn on for 6 seconds.

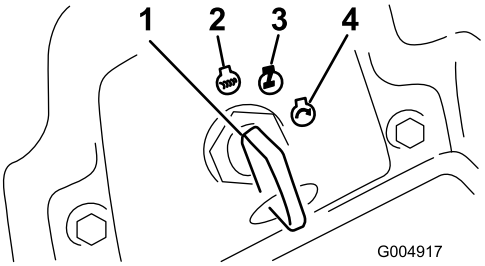

Figure 45

1. Ignition switch
2. Off
3. Run/glow pug
4. Start

7. After the glow plug indicator light goes out, turn the key to the Start position. When the engine starts release the key.

   Important: Use starting cycles of no more than 15 seconds per minute to avoid overheating the starter motor.

   Note: Additional starting cycles may be required when starting the engine for the first time after the fuel system has been completely drained.

8. Leave the throttle midway between the Slow and Fast positions until the engine and hydraulic system warm up.

⚠ CAUTION

Shut the engine off and wait for all moving parts to stop before checking for oil leaks, loose parts, or other malfunctions.

Driving the Machine

The throttle control regulates the engine speed as measured in rpm (revolutions per minute). Place the throttle control in the Fast position for best performance. Always operate in the Fast throttle position when running powered attachments.

⚠ CAUTION

The machine can turn very rapidly. You may lose control of it and cause personal injury or damage to machine.

- **Use caution when making turns.**
- **Slow the machine down before making sharp turns.**

1. Release the parking brake.

   Note: The engine will kill if the traction control levers are moved out of the Neutral-Locked position with the parking brake engaged.

2. Move the levers to the center, un-locked position.
3. Drive the machine as follows:
   - To go straight forward, slowly push the motion control levers forward (Figure 46).
   - To go straight rearward, slowly pull the motion control levers rearward (Figure 46).
   - To turn, slow the machine by pulling back on both levers and then push forward on the lever on the opposite side from which you want to turn (Figure 46).
   - To stop, pull the motion control levers to the neutral position.

   Note: The farther you move the traction control levers in either direction, the faster the machine will move in that direction.

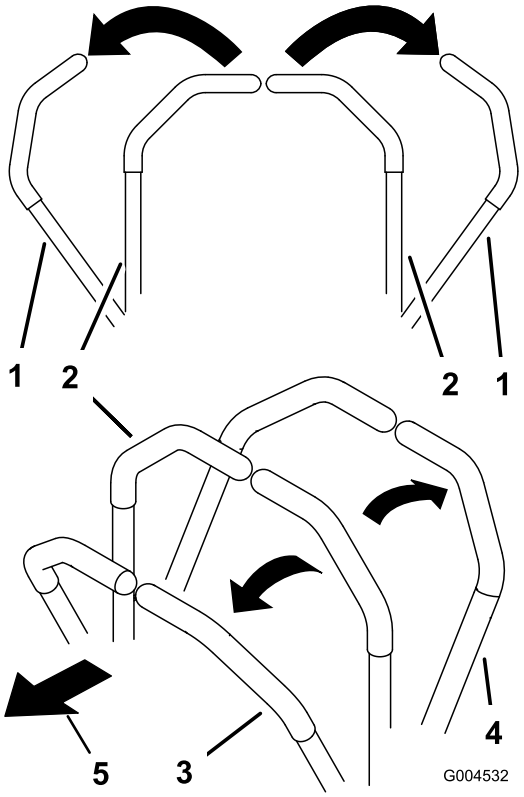

Figure 46

1. Motion control lever-neutral locked position
2. Center un-lock position
3. Forward
4. Backward

Stopping the Machine/Engine

1. Move the traction control levers to neutral and to the locked position.
2. Disengage the PTO, set the parking brake, and move the throttle lever to the Slow position.
3. Let the engine idle for 60 seconds.
4. Turn the ignition key to the Off position (Figure 45). Wait for all moving parts to stop before leaving the operating position.
5. Remove the key before transporting or storing machine.

Important: Make sure to remove the key as the fuel pump or accessories may run and cause the battery to lose charge.

⚠ CAUTION

Children or bystanders may be injured if they move or attempt to operate the machine while it is unattended.

Always remove the ignition key and set the parking brake when leaving the machine unattended, even if just for a few minutes.

The Safety Interlock System

⚠ CAUTION

If the safety interlock switches are disconnected or damaged the machine could operate unexpectedly causing personal injury.

- **Do not tamper with the interlock switches.**
- **Check the operation of the interlock switches daily and replace any damaged switches before operating the machine.**

Understanding the Safety Interlock System

The safety interlock system is designed to prevent the engine from starting unless:

- You are sitting on the seat or the parking brake is engaged.
- The power take off (PTO) is disengaged.
- The motion control levers are in the neutral locked position
- The engine temperature is below the maximum operating temperature.

The safety interlock system also is designed to stop the engine when the traction controls are moved from the neutral locked position with the parking brake engaged. If you rise from the seat when the PTO is engaged there is a 1 second delay and then the engine stops.

Testing the Safety Interlock System

Service Interval: Before each use or daily

Test the safety interlock system before you use the machine each time. If the safety system does not operate as described below, have an Authorized Service Dealer repair the safety system immediately.

1. Sitting on the seat, engage the parking brake and move the PTO to on. Try starting the engine; the engine should not crank.
2. Sitting on the seat, engage the parking brake and move the PTO to off. Move either motion control lever (out of neutral locked position). Try starting the engine; the engine should not crank. Repeat for other control lever.
3. Sitting on the seat, engage the parking brake, move the PTO switch to off and move the motion control levers to the neutral locked position. Now start the engine. While the engine is running, release the parking brake, engage the PTO and rise slightly from the seat; the engine should stop within 2 seconds.
4. Without an operator on the seat, engage the parking brake, move the PTO switch to off and move the motion control levers to the neutral locked position. Now start the engine. While the engine is running, center either motion control; the engine should stop within 2 seconds. Repeat for the other motion control.
5. Without an operator on the seat, disengage the parking brake, move the PTO switch to off, and move the motion control levers to the neutral locked position. Try starting the engine; the engine should not crank.

Using the SCM to Diagnose System Problems

The machine is equipped with a standard control module (SCM) monitoring system that tracks the function of various key systems. The SCM is located under the right control panel. Access it through the side panel cover (Figure 47). Tip the seat up and open the side panel cover by releasing the 2 latches and pulling out on it.

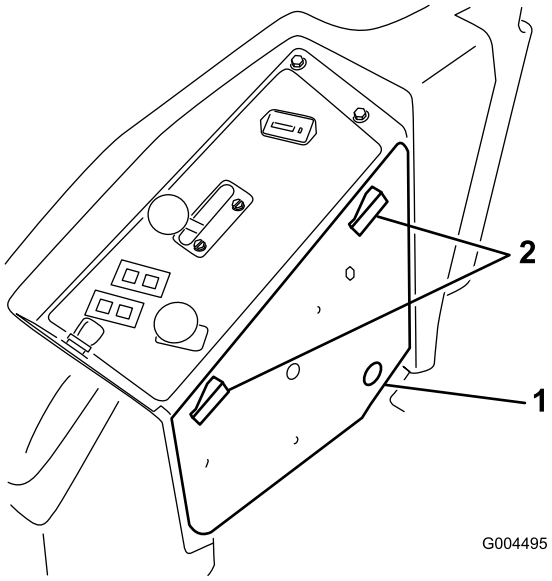

Figure 47

1. Side panel cover
2. Latches

On the face of the SCM are 11 LEDs that illuminate to indicate various system conditions. Seven of these lights can be used by the operator for system diagnosis. Refer to Figure 48 for a description of what each light means. For details on using the rest of the SCM functions, refer to the *Service Manual*, available through your Authorized Toro Distributor.

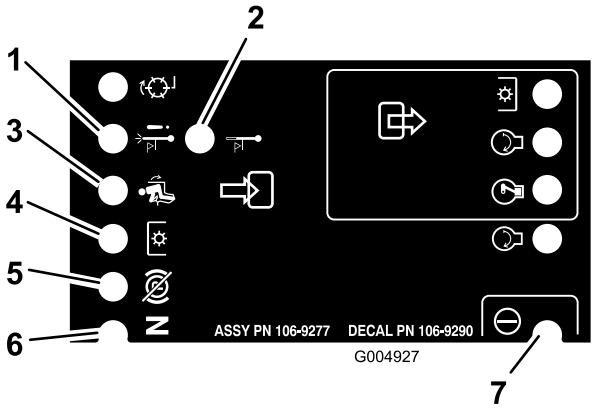

Figure 48

1. High temperature shutdown—the engine temperature has exceeded safe levels and the engine has been shut down. Check the cooling system.
2. High temperature warning—the engine temperature is approaching unsafe levels and the PTO has been shut down. Check the cooling system.
3. Operator is in the seat
4. The PTO is On
5. The parking brake is not engaged
6. Controls are in Neutral
7. The SCM is receiving power and is operational

Positioning the Seat

Changing the Seat Position

The seat can move forward and backward. Position the seat where you have the best control of the machine and are most comfortable.

1. To adjust, move the lever sideways to unlock the seat (Figure 49).

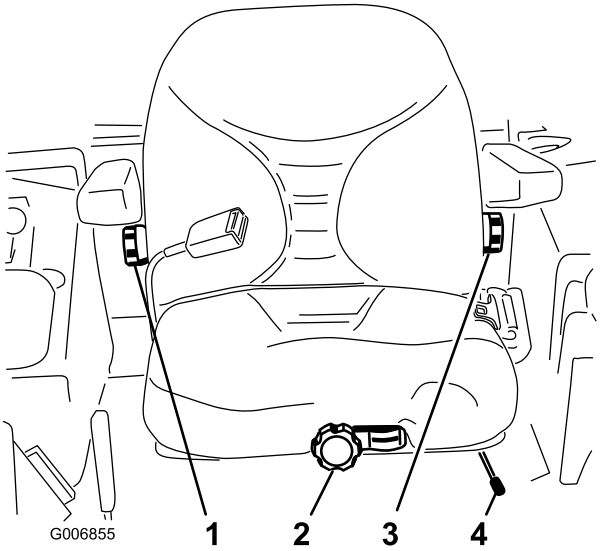

Figure 49

1. Back rest knob
2. Seat suspension knob
3. Lumbar support adjustment knob
4. Seat position adjustment lever

2. Slide the seat to the desired position and release lever to lock in position.
3. Verify that the seat has locked into place by attempting to move it back and forth.

Changing the Seat Suspension

The seat can be adjusted to provide a smooth and comfortable ride. Position the seat where you are most comfortable.

Without sitting on the seat, turn the knob in front either direction to provide the best comfort (Figure 49).

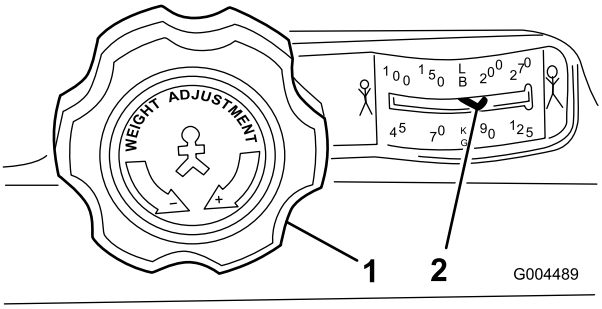

Figure 50

1. Seat suspension knob
2. Operator weight setting

Changing the Back Position

The back of the seat can be adjusted to provide a comfortable ride. Position the back of the seat where it is most comfortable.

To adjust it, turn the knob, under the right-side arm rest, in either direction to provide the best comfort (Figure 49).

Changing the Lumbar Support

The back of the seat can be adjusted to provide a customized lumbar support for your lower back.

To adjust it, turn the knob under the left-side arm rest, in either direction to provide the best comfort (Figure 49).

Unlatching the Seat

To access the hydraulic and other systems under the seat, you need to unlatch the seat and swing it forward.

1. Use the seat position adjustment lever to slide the seat all the way forward.
2. Lift up on the seat latch lever to unlatch and pivot the seat forward (Figure 51).

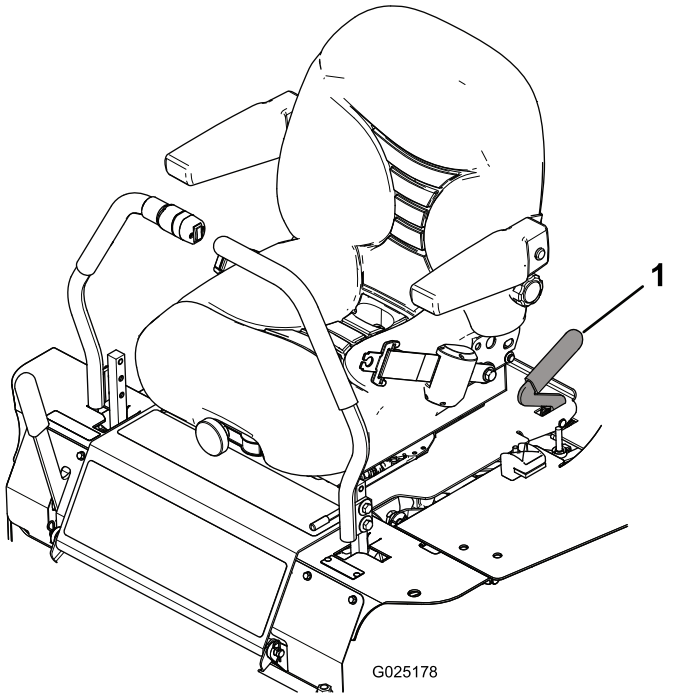

Figure 51

1. Seat latch

Moving a Non-functioning Machine

If the machine breaks down, runs out of fuel, etc. you may need to pull it with a winch to load it onto a trailer. To do so, you first need to open the hydraulic by-pass valves.

Important: Never tow the machine because hydraulic damage may occur.

Moving the Machine

1. Disengage the power take off (PTO) and turn the ignition key to off. Move the levers to the neutral locked position and apply the parking brake. Remove the key.
2. Lift the seat.
3. Rotate **both** by-pass valves counterclockwise 2 turns (Figure 52).

   This allows hydraulic fluid to by-pass the pump enabling the tracks to turn.

   Important: Do not rotate the by-pass valves more than 2.5 turns. This prevents valves from coming out of the body and causing fluid to run out.

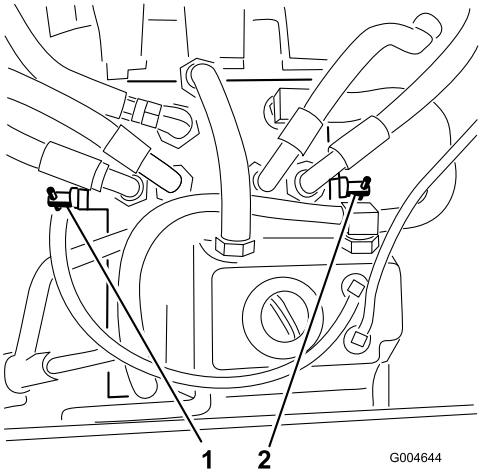

Figure 52

1. Right by-pass valve
2. Left by-pass valve

4. Disengage the parking brake before moving the machine.

Changing to Machine Operation

Rotate each by-pass valve clockwise and hand tighten them (torque of approximately 8 N-m (71 in-lb)) (Figure 52).

Note: Do not over tighten the by-pass valves.

The machine will not drive unless by-pass valves are turned in.

Loading Machines

Use extreme caution when loading units on trailers or trucks. One full width ramp that is wide enough to extend beyond the end of the tracks is recommended instead of individual ramps for each side of the unit (Figure 53). The lower rear section of the machine frame extends back between the rear wheels and serves as a stop for tipping backward. Having a full width ramp provides a surface for the frame members to contact if the unit starts to tip backward. If it is not possible to use one full width ramp, use enough individual ramps to simulate a full width continuous ramp.

The ramp should be long enough so that the angles do not exceed 15 degrees (Figure 53). A steeper angle may cause attachment components to get caught as the unit moves from ramp to trailer or truck. Steeper angles may also cause the unit to tip backward. If loading on or near a slope, position the trailer or truck so it is on the down side of the slope and

the ramp extends up the slope. This will minimize the ramp angle. The trailer or truck should be as level as possible.

Important: Do not attempt to turn the unit while on the ramp; you may lose control and drive off the side, or the tracks may come off.

Avoid sudden acceleration when driving up a ramp and sudden deceleration when backing down a ramp. Both maneuvers can cause the unit to tip backward.

⚠ WARNING

Loading a unit onto a trailer or truck increases the possibility of backward tip-over and could cause serious injury or death.

- **Use extreme caution when operating a unit on a ramp.**
- **Use only a single, full width ramp; Do not use individual ramps for each side of the unit.**
- **If individual ramps must be used, use enough ramps to create an unbroken ramp surface wider than the unit.**
- **Do not exceed a 15 degree angle between ramp and ground or between ramp and trailer or truck.**
- **Avoid sudden acceleration while driving unit up a ramp to avoid tipping backward.**
- **Avoid sudden deceleration while backing unit down a ramp to avoid tipping backward.**

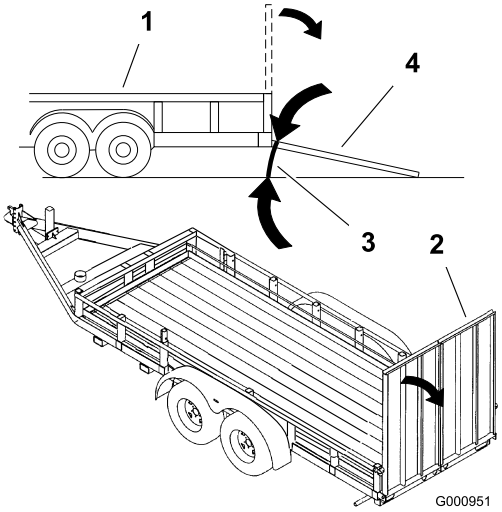

Figure 53

1. Trailer
2. Full width ramp
3. Not greater than 15 degrees
4. Full width ramp—side view

Transporting the Machine

Use a heavy-duty trailer or truck to transport the machine. Always transport (trailer) the machine facing forward.

Ensure that the trailer or truck has all necessary lighting and marking as required by law. Please carefully read all the safety instructions. Knowing this information could help you or bystanders avoid injury.

To transport the machine:

- Ensure that your vehicle, hitch, safety chains, and trailer are adequate for the load you are pulling and that they meet all local traffic regulations for your area.
- Lock the brake and block the tracks/tires.
- Securely fasten the machine to the trailer or truck with straps, chains, cable, or ropes as required by local traffic regulations in your area (Figure 54).

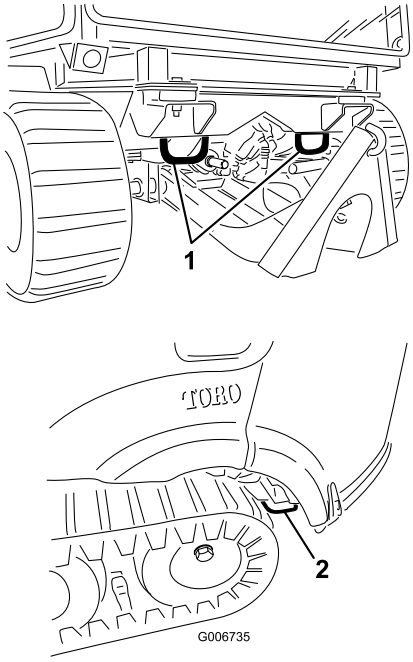

Figure 54

1. Front tie-downs
2. Rear tie-down (left side shown)

Operating Front Attachments with the Polar Trac Kit Installed

Changing the Attachment Orientation

Use the attachment control pedals (Figure 55) to control the physical orientation of the attachment. Use the left pedal to raise and lower the attachment. Use the right pedal to swing the attachment to the right or left.

Note: The right pedal is not used on all attachments. Also, on snowthrowers, only the chute swings right and left.

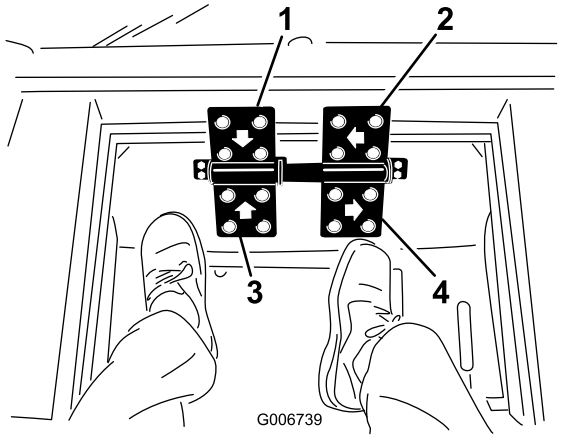

Figure 55

1. Press to lower the attachment/lift arm
2. Press to swing the attachment to the left
3. Press to raise the attachment/lift arm
4. Press to swing the attachment to the right

Important: Do not continue to hold a pedal after the attachment has finished moving. Doing so will damage the hydraulic system.

Connecting/Disconnecting an Attachment

Read the *Operator's Manual* supplied with the attachment before operating.

1. Lower the front lift arm.
2. Drive the machine into position behind the attachment adapter.
3. Raise the machine adapter on the lift arm into the attachment adapter.
4. Secure the adapters together with the attachment pin and hairpin cotter as shown in Figure 56.

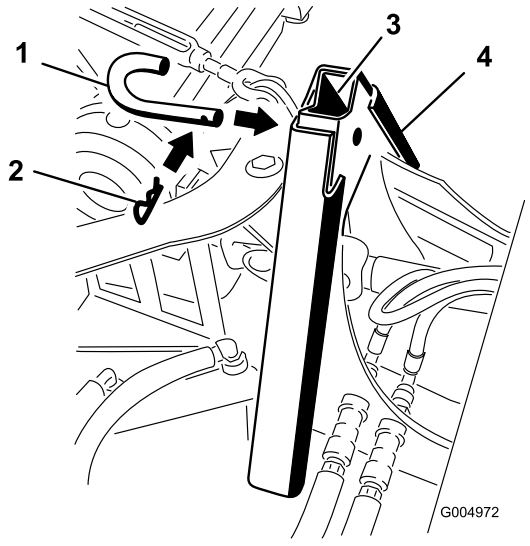

Figure 56

1. Attachment pin
2. Cotter pin

5. If the attachment is powered by hydraulics, connect the hydraulic coupler on the attachment to those on the front lift arm.

   Important: Ensure that the couplers are clean before connecting them to prevent hydraulic system contamination.

6. If the attachment is powered by the PTO, extend the attachment PTO shaft and insert it onto the machine PTO shaft (Figure 57).

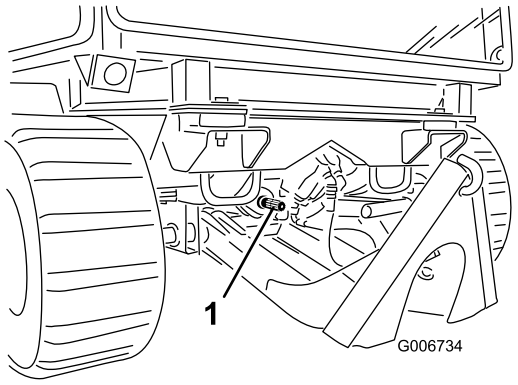

Figure 57

1. PTO shaft

Note: To remove an attachment, perform the above steps in reverse.

Engaging the Power Take Off (PTO)

The power take off (PTO) switch starts and stops powered attachments.

1. If the engine is cold, allow the engine to warm up 5 to 10 minutes before engaging the PTO.
2. While seated in the seat, release the pressure on the traction control levers and place them in neutral.
3. Pull up on the PTO switch to engage it (Figure 58).

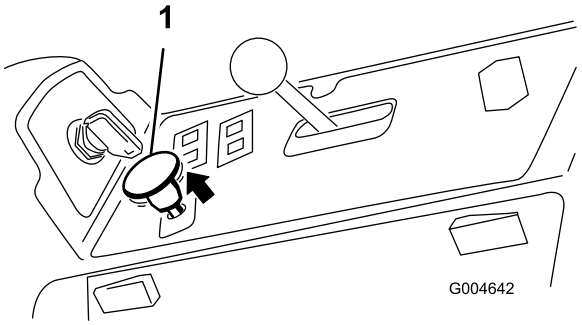

Figure 58

1. PTO switch

Disengaging the PTO

To disengage, push the PTO switch to the off position.

Maintenance

Note: Determine the left and right sides of the machine from the normal operating position.

Important: Engine oil, batteries, hydraulic oil, and engine coolant are pollutants to the environment. Dispose of these according to your state and local regulations.

Recommended Maintenance Schedule(s)

Maintenance Service Interval	Maintenance Procedure
After the first 10 hours	• Check the alternator belt tension. • Torque the wheel lug nuts.
After the first 50 hours	• Change the engine oil and filter.
After the first 200 hours	• Change the hydraulic oil and filter.
Before each use or daily	• Test the safety system. • Check the engine oil level. • Check the engine coolant level. • Clean the radiator with compressed air (do not use water) • Check the hydraulic fluid level.
Every 50 hours	• Grease the bearing and bushing grease fittings. (Grease more frequently when operating conditions are extremely dusty or sandy.) • Check battery cable connections.
Every 150 hours	• Change the engine oil and filter.
Every 200 hours	• Inspect cooling system hoses and seals. Replace them if cracked or torn. • Check the alternator belt tension. • Torque the wheel lug nuts.
Every 400 hours	• Service the air cleaner. • Replace the fuel filter canister. • Check the fuel lines and connections.
Every 800 hours	• Change the hydraulic oil and filter. • Inspect engine valve clearance. Refer to your Engine Operator's Manual.
Every 1,500 hours	• Replace moving hoses
Every 2 years	• Drain and clean the fuel tank. • Flush and replace cooling system fluid.

Important: Refer to your *Engine Operator's Manual* for additional maintenance procedures. A detailed Service Manual is also available for purchase from your Authorized Toro Distributor.

Note: Looking for an *Electrical Schematic* or *Hydraulic Schematic* for your machine? Download a free copy of the schematic by visiting www.Toro.com and searching for your machine from the Manuals link on the home page.

Daily Maintenance Checklist

Duplicate this page for routine use.

Maintenance Check Item	For the week of:						
	Mon.	Tues.	Wed.	Thurs.	Fri.	Sat.	Sun.
Check Safety Interlock Operation							
Check Parking Brake Operation							
Check Fuel Level							
Check Hydraulic Oil Level							
Check Engine Oil Level							
Check Cooling System Fluid Level							
Check Drain Water/Fuel Separator							
Check Air Filter Restriction Indicator[3]							
Check Radiator & Screen for Debris							
Check Unusual Engine Noises[1]							
Check Unusual Operating Noises							
Check Hydraulic Hoses for Damage							
Check Fluid Leaks							
Check Tire Pressure							
Check Instrument Operation							
Lubricate All Grease Fittings[2]							
Touch-up Damaged Paint							

1. Check glow plug and injector nozzles, if hard starting, excess smoke or rough running is noted.
2. Immediately after every washing, regardless of the interval listed.
3. If indicator shows red

Notation for Areas of Concern		
Inspection performed by:		
Item	Date	Information

⚠ CAUTION

If you leave the key in the ignition switch, someone could accidently start the engine and seriously injure you or other bystanders.

Remove the key from the ignition before you do any maintenance.

Premaintenance Procedures

Important: The fasteners on the covers of this machine are designed to remain on the cover after removal. Loosen all of the fasteners on each cover a few turns so that the cover is loose but still attached, then go back and loosen them until the cover comes free. This will prevent you from accidentally stripping the bolts free of the retainers.

Lubrication

Greasing the Bearings and Bushings

Service Interval: Every 50 hours (Grease more frequently when operating conditions are extremely dusty or sandy.)

Grease Type: No. 2 General Purpose Lithium Base Grease.

Important: Lubricate the grease fittings immediately after every washing, regardless of interval specified. Bearing life can be negatively affected by improper wash down procedures. Do not wash down the unit when it is still hot and avoid directing high-pressure or high volume spray at the bearings or seals.

1. Wipe the grease fittings clean so foreign matter cannot be forced into the bearing or bushing.
2. Pump grease into the fittings.
3. Wipe off excess grease.

Engine Maintenance

Air Cleaner Maintenance

- Check the air cleaner body for damage which could possibly cause an air leak. Replace a damaged air cleaner body. Check the whole clean air intake system for leaks, damage, or loose hose clamps.
- Service the air cleaner filter when the air cleaner indicator (Figure 59) shows red or every 400 hours (more frequently in extremely dusty or dirty conditions). Do not over service the air filter.

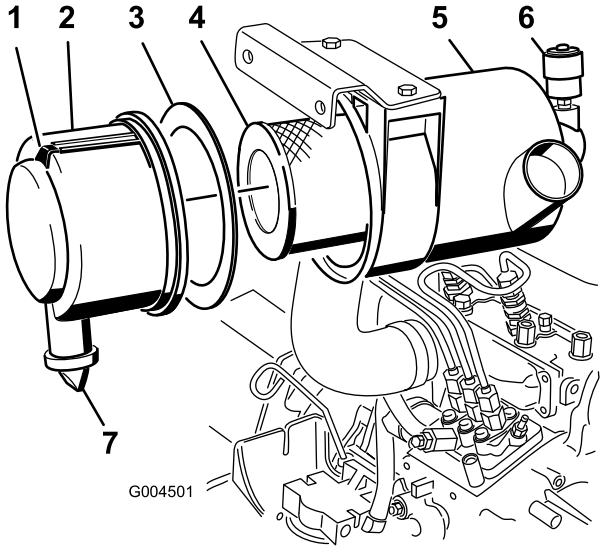

Figure 59

1. Air cleaner latch
2. Air cleaner cover
3. Gasket
4. Filter
5. Air cleaner body
6. Air cleaner indicator
7. Rubber outlet valve

- Be sure the cover is seated correctly and seals with the air cleaner body.

Servicing the Air Cleaner

Service Interval: Every 400 hours

1. Pull the latch outward and rotate the air cleaner cover counter-clockwise (Figure 59).
2. Remove the cover from the air cleaner body (Figure 59).
3. Before removing the filter, use low pressure air (40 psi, clean and dry) to help remove large accumulations of debris packed between outside of primary filter and the canister.

   This cleaning process prevents debris from migrating into the intake when the primary filter is removed.

   Important: Avoid using high pressure air which could force dirt through the filter into the intake tract.
4. Remove and replace the primary filter (Figure 59).

   Important: Do not clean the used element to avoid damage to the filter media.
5. Inspect the new filter for shipping damage, checking the sealing end of the filter and the body.

   Important: Do not use a damaged element.
6. Ensure that the foam gasket is in place in the cover and that it is not torn or damaged (Figure 59). If it is damaged, replace it.
7. Insert the new filter by applying pressure to the outer rim of the element to seat it in the canister.

   Important: Do not apply pressure to the flexible center of the filter.
8. Clean the dirt ejection port located in the removable cover, as follows:
   A. Remove the rubber outlet valve from the cover (Figure 59).
   B. Clean the cavity.
   C. Replace the outlet valve.
9. Install the cover orienting the rubber outlet valve in a downward position—between approximately 5:00 to 7:00 when viewed from the end.
10. Reset the indicator (Figure 59) if showing red.

Servicing the Engine Oil

Checking the Engine Oil Level

Service Interval: Before each use or daily

The engine is shipped with oil in the crankcase; however, the oil level must be checked before and after the engine is first started. Check oil level before each day's operation or each time machine is used.

The crankcase capacity is approximately 3.8 liters (4 quarts) with the filter. Use high-quality engine oil that meets the following specifications:

- API Classification Level Required: CH-4, CI-4 or higher.
- Preferred oil: SAE 15W-40 (above -17° C (0° F)
- Alternate oil: SAE 10W-30 or 5W-30 (all temperatures)

Note: Toro Premium Engine oil is available from your distributor in either 15W-40 or 10W-30 viscosity. See the parts catalog for part numbers.

1. Park the machine on a level surface, lower the attachment, move the throttle lever to the Slow position, stop the engine, and remove the key from the ignition switch. Open the hood.
2. Remove the dipstick (Figure 60), wipe it clean, and install the dipstick. Remove the dipstick and check the oil level.

The oil level should be up to the Full mark on the dipstick.

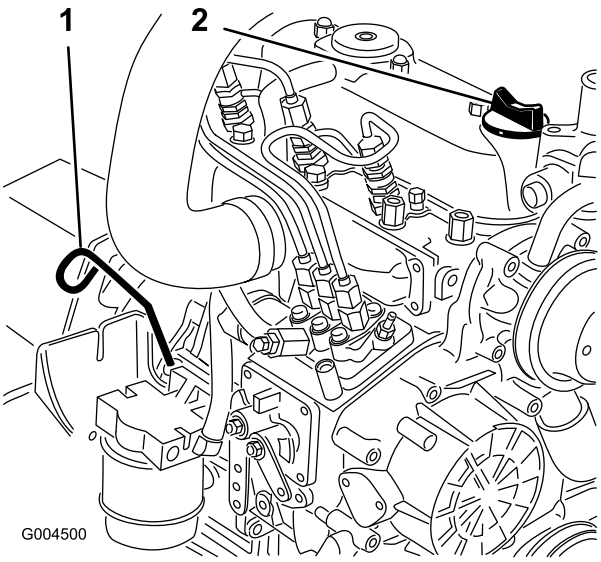

Figure 60

1. Dipstick 2. Oil fill

3. If the oil level is below the Full mark, remove the fill cap (Figure 60) and add oil until the level reaches the Full mark on the dipstick.

   Important: Do not overfill.

   Note: Use a clean funnel to prevent spills.

4. Install the oil fill cap and close the hood.

Changing the Engine Oil And Filter

Service Interval: After the first 50 hours

Every 150 hours

Change the oil and filter initially after first 50 hours of operation and then every 150 hours of operation thereafter. If possible, run the engine just before changing the oil because warm oil flows better and carries more contaminants than cold oil.

1. Position the machine on a level surface.
2. Open the hood.
3. Set a drain pan under the oil pan and in line with the drain plug (Figure 61).

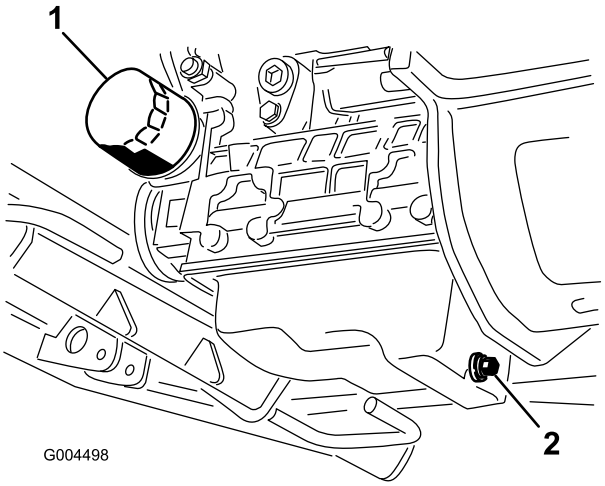

Figure 61

1. Oil filter 2. Drain plug

4. Clean the area around the drain plug.
5. Remove the drain plug and allow the oil to flow into drain pan.
6. Remove and replace the oil filter (Figure 61).
7. After the oil is drained, install the drain plug and wipe up any oil that is spilled.
8. Fill the crankcase with oil; refer to Checking the Engine Oil Level.

Fuel System Maintenance

Note: Refer to Adding Fuel for proper fuel recommendations.

⚠ DANGER

Under certain conditions, diesel fuel and fuel vapors are highly flammable and explosive. A fire or explosion from fuel can burn you and others and can cause property damage.

- **Use a funnel and fill the fuel tank outdoors, in an open area, when the engine is off and is cold. Wipe up any fuel that spills.**
- **Do not fill the fuel tank completely full. Add fuel to the fuel tank until the level is to the bottom of the filler neck.**
- **Never smoke when handling fuel, and stay away from an open flame or where fuel fumes may be ignited by a spark.**
- **Store fuel in a clean, safety-approved container and keep the cap in place.**

Servicing the Water Separator

Service Interval: Every 400 hours

Drain water or other contaminants from water separator (Figure 62) daily. Replace filter canister after every 400 hours of operation.

1. Place a clean container under the fuel filter.
2. Loosen the drain plug on the bottom of the filter canister.

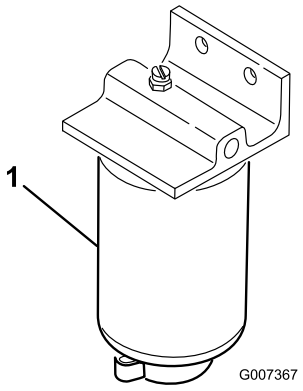

Figure 62

1. Water separator filter canister

3. Clean the area where the filter canister mounts.
4. Remove the filter canister and clean the mounting surface.
5. Lubricate the gasket on the filter canister with clean oil.
6. Install the filter canister by hand until the gasket contacts mounting surface, then rotate it an additional 1/2 turn.
7. Tighten the drain plug on the bottom of the filter canister.

Cleaning the Fuel Tank

Service Interval: Every 2 years

Note: Also, drain and clean the tank if the fuel system becomes contaminated or if the machine is to be stored for an extended period.

Use clean diesel fuel to flush out the tank.

Fuel Lines and Connections

Service Interval: Every 400 hours/Yearly (whichever comes first)

Inspect the fuel lines for deterioration, damage, chaffing, or loose connections.

Bleeding the Fuel System

1. Park the machine on a level surface. Ensure that the fuel tank is at least half full.
2. Unlatch and raise the hood.
3. Place a rag under the air bleed screw on the fuel injection pump and open it (Figure 63).

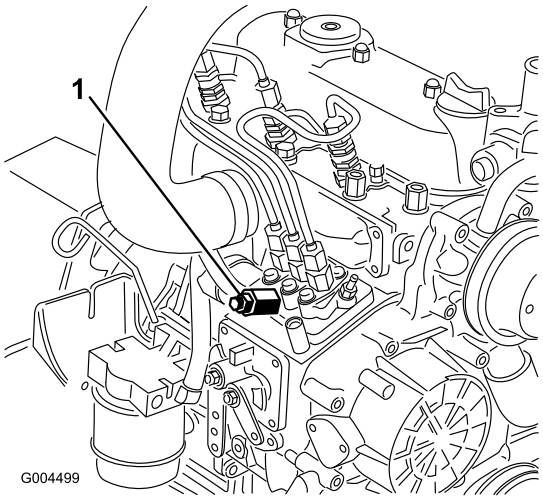

Figure 63

1. Fuel injection pump bleed screw

4. Turn the key in the ignition switch to the Run position.

   The electric fuel pump will begin operation, thereby forcing air out around the air bleed screw.

⚠ CAUTION

The engine may start during this procedure. Moving fans and belts in a running engine can severely injure you or bystanders.

Keep hands, fingers, loose clothing/jewelry, and hair away from the engine fan and belt during this procedure.

5. Leave the key in the On position until a solid stream of fuel flows out around the screw.
6. Tighten the screw and turn key to the Off position.

Note: Normally, the engine should start after above bleeding procedures are followed. However, if engine does not start, air may be trapped between injection pump and injectors; refer to Bleeding Air From the Injectors.

Bleeding Air From the Injectors

Note: This procedure should be used only if the fuel system has been purged of air through normal priming procedures and engine will not start; refer to Bleeding the Fuel System.

1. Place a rag under the pipe connection coming from the injection pump to the No. 1 injector nozzle as illustrated in Figure 64.

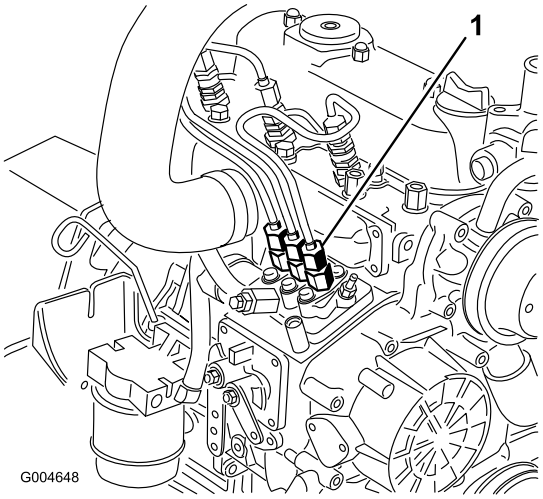

Figure 64

1. Pipe connection from the injection pump to the No. 1 injector nozzle

2. Move the throttle to the Fast position.
3. Turn the ignition key the Start position and watch the fuel flow around the connector.

⚠ CAUTION

The engine may start during this procedure. Moving fans and belts in a running engine can severely injure you or bystanders.

Keep hands, fingers, loose clothing/jewelry, and hair away from the engine fan and belt during this procedure.

4. Tighten the pipe connector securely when it attains a solid flow.
5. Turn the key to the Off position.
6. Repeat this procedure for the remaining nozzles.

Electrical System Maintenance

Important: Whenever working with the electrical system, always disconnect the battery cables, negative (-) cable first, to prevent possible wiring damage from short-outs.

Servicing the Battery

Service Interval: Every 50 hours—Check battery cable connections.

WARNING

CALIFORNIA
Proposition 65 Warning

Battery posts, terminals, and related accessories contain lead and lead compounds, chemicals known to the State of California to cause cancer and reproductive harm. Wash hands after handling.

Keep the top of the battery clean. If you store the machine in a location where temperatures are extremely high, the battery will run down more rapidly than if the machine is stored in a location where temperatures are cool.

Keep the top of the battery clean by washing it periodically with a brush dipped in ammonia or bicarbonate of soda solution. Flush the top surface with water after cleaning it. Do not remove the fill caps while cleaning the battery.

The battery cables must be tight on the terminals to provide good electrical contact.

If corrosion occurs at the terminals, disconnect the cables, negative (-) cable first, and scrape the clamps and terminals separately. Reconnect the cables, positive (+) cable first, and coat the terminals with petroleum jelly.

⚠ WARNING

Battery terminals or metal tools could short against metal machine components causing sparks. Sparks can cause the battery gasses to explode, resulting in personal injury.

- **When removing or installing the battery, do not allow the battery terminals to touch any metal parts of the machine.**
- **Do not allow metal tools to short between the battery terminals and metal parts of the machine.**

⚠ WARNING

Incorrect battery cable routing could damage the machine and cables causing sparks. Sparks can cause the battery gasses to explode, resulting in personal injury.

- **Always disconnect the negative (black) battery cable before disconnecting the positive (red) cable.**
- **Always connect the positive (red) battery cable before connecting the negative (black) cable.**

Storing the Battery

If the machine will be stored more than 30 days, remove the battery and charge it fully. Either store it on a shelf or on the machine. Leave the cables disconnected if it is stored on the machine. Store the battery in a cool atmosphere to avoid quick deterioration of the charge in the battery. To prevent the battery from freezing, make sure it is fully charged. The specific gravity of a fully charged battery is 1.265-1.299.

Checking the Fuses

The machine fuses are located under the control panel. Access them through the side panel cover (Figure 65). To open the side panel cover, release the 2 latches and pull out on it.

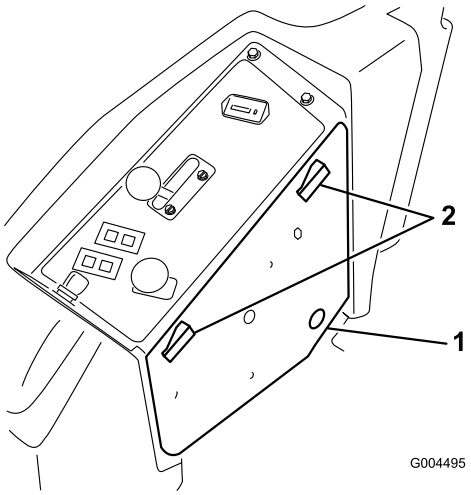

Figure 65

1. Side panel cover
2. Latches

Cooling System Maintenance

⚠ DANGER

Discharge of hot pressurized coolant or touching hot radiator and surrounding parts can cause severe burns.

- **Do not remove the radiator cap when the engine is hot. Always allow the engine to cool at least 15 minutes or until the radiator cap is cool enough to touch without burning your hand before removing the radiator cap.**
- **Do not touch radiator and surrounding parts that are hot.**

⚠ DANGER

The rotating fan and drive belt can cause personal injury.

- **Do not operate the machine without the covers in place.**
- **Keep fingers, hands and clothing clear of rotating fan and drive belt.**
- **Shut off the engine and remove the ignition key before performing maintenance.**

Checking the Cooling System

Service Interval: Before each use or daily—Check the engine coolant level.

The cooling system is filled with a 50/50 solution of water and permanent ethylene glycol anti freeze. Check the level of the coolant in the expansion tank at the beginning of each day before starting the engine. The capacity of the cooling system is 7.5 liters (6 quarts).

1. Check the level of the coolant in the expansion tank (Figure 66). The coolant level should be between the marks on the side of the tank.

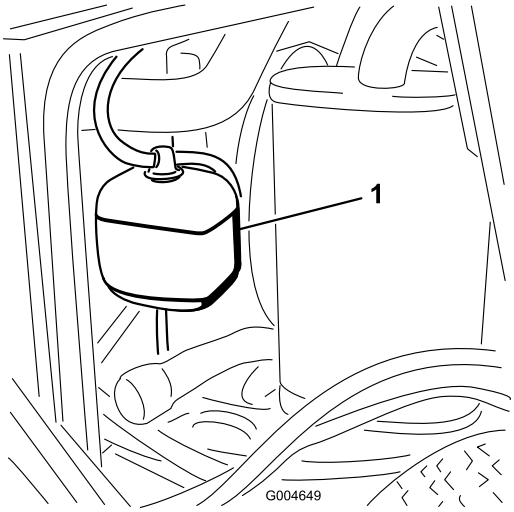

Figure 66

1. Expansion tank

2. If coolant level is low, remove the expansion tank cap and replenish the system. **Do not overfill**.

⚠ CAUTION

Swallowing engine coolant can cause poisoning.

- **Do not swallow engine coolant.**
- **Keep out of reach from children and pets.**

3. Install the expansion tank cap.

Cleaning the Radiator

Service Interval: Before each use or daily—Clean the radiator with compressed air (do not use water)

To prevent the engine from overheating, the radiator must be kept clean. Normally, check the radiator daily and, if necessary, clean any debris off these parts. However, it will be necessary to check and clean the radiator frequently in extremely dusty and dirty conditions.

Note: If the PTO or engine shuts off due to overheating, first check the radiator for excessive buildup of debris, ice, or snow.

Clean the radiator as follows:

1. Open the hood.
2. Working from the fan side of the radiator, blow out debris with low pressure (50 psi) compressed air **(do not use water)**. Repeat the step from the front of the radiator and again from the fan side.

3. After the radiator is thoroughly cleaned, clean out debris that may have collected in the channel at the radiator base.
4. Close the hood.

Brake Maintenance

Adjusting the Parking Brake Interlock Switch

1. Stop the machine, move the control levers fully into the neutral-locked position, set the parking brake, and remove the ignition key.
2. Unlatch the seat and pivot it forward.

   Note: If additional access is required under the seat, the side panels may be removed.
3. Loosen the two jam nuts securing the parking brake interlock switch to the mounting bracket.

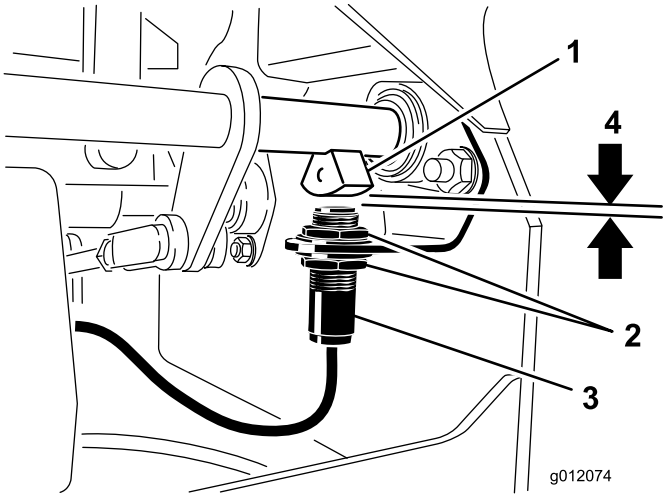

Figure 67

1. Brake shaft sensor
2. Jam nuts
3. Parking brake interlock switch
4. 5/32 inch (3.9 mm)

4. Move the switch up or down on the bracket until the distance between the brake shaft sensor and the switch surface is 3.9 mm (5/32 inch) (Figure 67).

   Note: Make sure the brake shaft sensor does not contact the switch plunger.
5. Secure the switch jam nuts.
6. Test the adjustment as follows:
   A. Ensure that the parking brake is engaged and you are not sitting on the seat, then start the engine.
   B. Move the control levers out of the neutral locked position.

      The engine should stop. If not, recheck the adjustment you made to the switch.
7. Lower the seat.

Belt Maintenance

Checking the Alternator Belt Tension

Service Interval: After the first 10 hours

Every 200 hours

1. Apply 10 lb of force to the alternator belt, midway between the pulleys.
2. If the deflection is not 10 mm (3/8 inch), loosen the alternator mounting bolts (Figure 68).

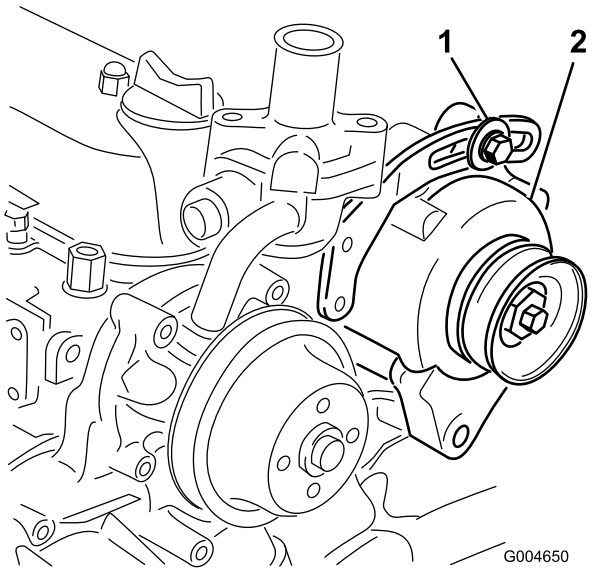

Figure 68

1. Mounting bolt
2. Alternator

3. Increase or decrease the alternator belt tension and tighten the bolts.
4. Check the deflection of the belt again to ensure that the tension is correct.

Controls System Maintenance

Adjusting the Control Lever Neutral Interlock Switch

1. Stop the machine, move the control levers fully into the neutral-locked position, set the parking brake, and remove the ignition key.
2. Unlatch the seat and pivot it forward.

   Note: If additional access is required under the seat, the side panels may be removed.
3. Loosen the 2 screws securing the interlock switch (Figure 69).

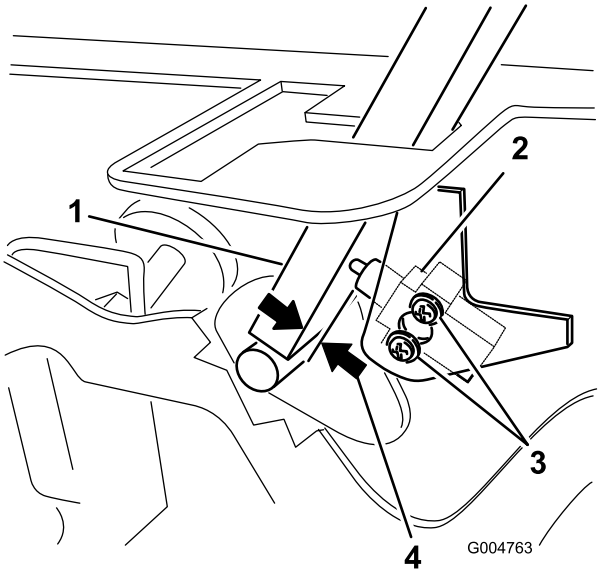

Figure 69

1. Control lever
2. Neutral interlock switch
3. Screws
4. 0.4 to 1 mm (0.015 to 0.045 inch)

4. Holding the control lever against the frame, move the switch toward the lever until the distance between lever and switch body is 0.015 to 0.045 inch (0.4 to 1 mm) (Figure 69).
5. Secure the switch.
6. Repeat steps 3 to 5 for the other lever.
7. Lower the seat.

Adjusting the Control Lever Neutral Return

If the motion control levers do not align with the neutral slots when released from the reverse drive position, adjustment is required. Adjust each lever, spring, and rod separately.

1. Disengage the PTO, move the motion control levers to the neutral locked position and set the parking brake.
2. Move the throttle lever to the Slow position, stop the engine, remove the key, and wait for all moving parts to stop before leaving the operating position.
3. Unlatch the seat and pivot it forward.

   Note: If additional access is required under the seat, the side panels may be removed.
4. Move one of the levers to the neutral position but **not locked** (Figure 71).
5. Pull the lever back until the clevis pin (on an arm above the pivot shaft) contacts the end of the slot (just beginning to put pressure on the spring) (Figure 70).

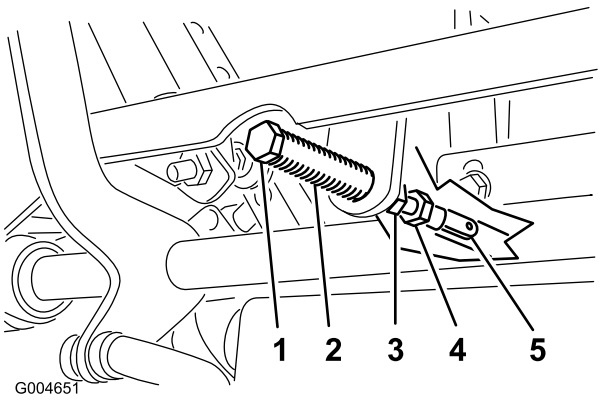

Figure 70

1. Clevis pin
2. Slot
3. Jam nuts
4. Adjustment bolt
5. Yoke

6. Check where the control lever is relative to notch in console (Figure 71). It should be centered allowing lever to pivot outward to the neutral lock position.

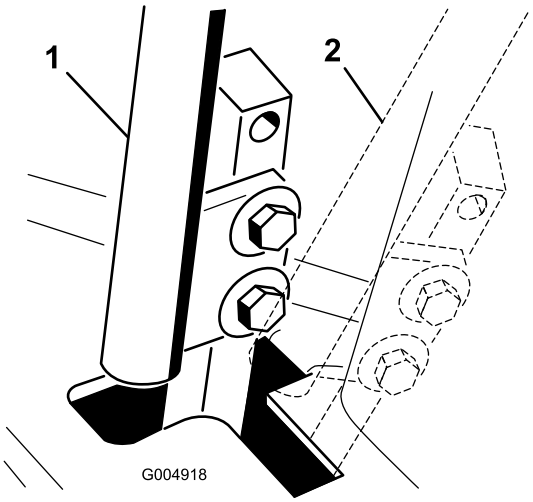

Figure 71

1. Neutral position
2. Neutral locked position

7. If adjustment is needed, loosen the nut and jam nut against the yoke (Figure 70).
8. Applying slight rearward pressure on the motion control lever, turn the head of the adjustment bolt in the appropriate direction until the control lever is centered in the neutral lock position (Figure 70).

   Note: Keeping rearward pressure on the lever will keep the pin at the end of the slot and allow the adjustment bolt to move the lever to the appropriate position.
9. Tighten the nut and jam nut (Figure 70).
10. Repeat steps 4 through 9 for the other control lever.
11. Lower the seat.

Adjusting the Traction Drive for Neutral

This adjustment must be made with tracks turning.

⚠ DANGER

Mechanical or hydraulic jacks may fail to support machine and cause a serious injury.

- **Use jack stands when supporting machine.**
- **Do not use hydraulic jacks.**

⚠ WARNING

The engine must be running to perform this adjustment. Contact with moving parts or hot surfaces may cause personal injury.

Keep hands, feet, face, clothing, and other body parts away from rotating parts, muffler, and other hot surfaces.

1. Raise the frame onto stable jack stands so that the tracks can rotate freely.
2. Unlatch the seat and pivot it forward.

   Note: If additional access is required under the seat, the side panels may be removed.
3. Disconnect the electrical connector from the seat safety switch. Temporarily install a jumper wire across terminals in the wiring harness connector.
4. Start the engine, ensure that the throttle lever is midway between the Fast and Slow positions, and release the parking brake

   Note: The motion control levers must be in the neutral locked position while making any adjustments.
5. Adjust the pump rod length on one side by rotating the hex shaft, in the appropriate direction, until the corresponding wheel is still or slightly creeping in reverse (Figure 72).

6. Move the motion control lever forward and reverse, then back to neutral. The wheel must stop turning or slightly creep in reverse.

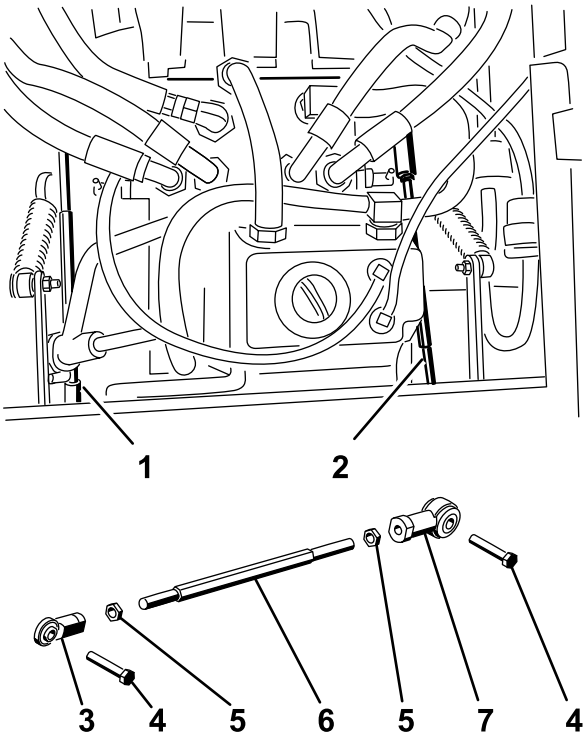

Figure 56

Figure 72

1. Right pump rod
2. Left pump rod
3. Ball joint
4. Bolt
5. Jam Nut
6. Hex shaft
7. Ball joint

7. Move the throttle lever to the Fast position. Make sure wheel remains stopped or slightly creeps in reverse, adjust if necessary.
8. Repeat steps 5 through 7 for the other side.
9. Tighten the jam nuts at the ball joints (Figure 70).
10. Move the throttle lever to the Slow position and stop the engine.
11. Remove the jumper wire from the wire harness connector and plug the connector into the seat switch.

⚠ WARNING

Electrical system will not perform proper safety shut off with jumper wire installed.

- **Remove jumper wire from wire harness connector and plug connector into seat switch when adjustment is completed.**
- **Never operate this unit with jumper installed and seat switch bypassed.**

12. Lower the seat.
13. Remove the jack stands.

Adjusting the Maximum Ground Speed

Note: If you wish to reduce the maximum machine speed, set the speed for both control levers as directed below, then back each stop bolt out an equal amount toward the control lever until you reach the maximum speed you desire (you will likely have to test your adjustment several times). Ensure that the machine drives straight and does not turn when both control levers are pushed all the way forward. If the machine turns, you do not have the stop bolts evenly set and will need to adjust them further.

1. Disengage the PTO, move the motion control levers to the neutral locked position and set the parking brake.
2. Move the throttle lever to the Slow position, stop the engine, remove the key, and wait for all moving parts to stop before leaving the operating position.
3. Unlatch the seat and pivot it forward.

   Note: If additional access is required under the seat, the side panels may be removed.
4. Loosen the jam nut on the stop bolt for one of the control levers (Figure 73).

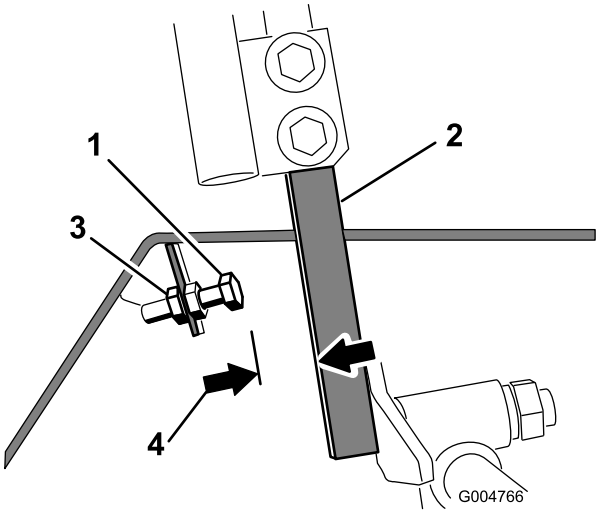

Figure 73

1. Stop bolt
2. Control lever
3. Jam nut
4. 1.5 mm (0.060 inch)

5. Thread the stop bolt all the way in (away from the control lever).
6. Push the control lever all the way forward until it stops and hold it there.
7. Thread the stop bolt out (towards the control lever) until there is a gap of 1.5 mm (0.060 inch) between the head of the stop bolt and the control lever.
8. Tighten the jam nut to secure the stop bolt in place.
9. Repeat steps 4 through 8 for the other control lever.

10. Lower the seat.

Adjusting the Tracking

1. Disengage the PTO, move the motion control levers to the neutral locked position and set the parking brake.
2. Move the throttle lever to the Slow position, stop the engine, remove the key, and wait for all moving parts to stop before leaving the operating position.
3. Loosen the bolts securing the control levers (Figure 74)

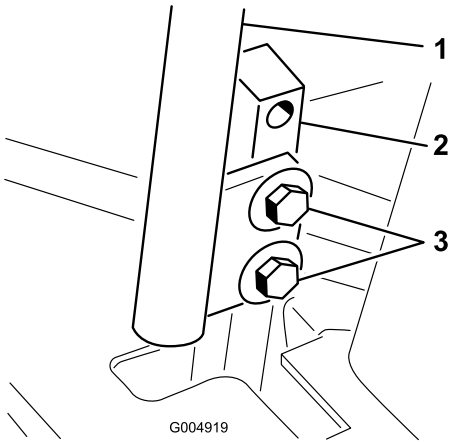

Figure 74

1. Control lever
2. Control lever post
3. Bolts

4. Have someone push the control lever posts (not the control levers) all the way forward into the maximum speed position and hold them there.
5. Adjust the control levers so that they line up (Figure 75) and tighten the bolts, securing the levers to the posts.

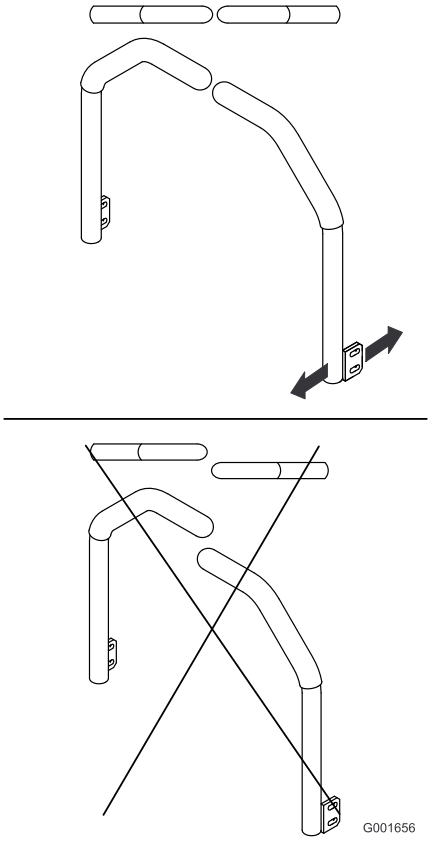

Figure 75

Hydraulic System Maintenance

The reservoir is filled at the factory with approximately 4.7 liters (5 quarts) of high quality tractor transmission/hydraulic fluid. The recommended replacement fluid is as follows:

Toro Premium Transmission/Hydraulic Tractor Fluid
(Available in 5 gallon pails or 55 gallon drums. See parts catalog or Toro distributor for part numbers.)

Alternate fluids: If the Toro fluid is not available, Mobil® 424 hydraulic fluid may be used.

Note: Toro will not assume responsibility for damage caused by improper substitutions.

Note: Many hydraulic fluids are almost colorless, making it difficult to spot leaks. A red dye additive for the hydraulic system oil is available in 20 ml (2/3 ounce.) bottles. One bottle is sufficient for 15-22 1iters (4-6 gallons) of hydraulic oil. Order part number 44-2500 from your authorized Toro distributor.

Checking the Hydraulic Fluid Level

Service Interval: Before each use or daily

1. Position the machine on a level surface. Place the controls in the neutral locked position and start the engine. Run engine at lowest possible RPM to purge the system of air. **Do not engage the PTO**. Raise the deck to extend lift cylinders, stop the engine, and remove the key.
2. Raise the seat to access the hydraulic fluid tank.
3. Remove the hydraulic fill cap (Figure 76) from filler neck.

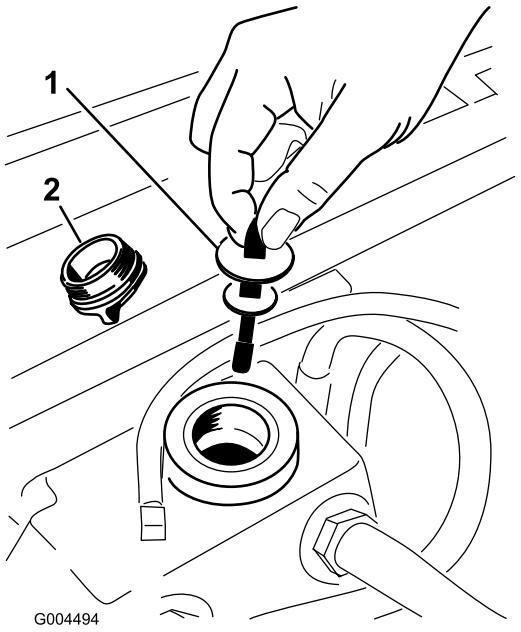

Figure 76

1. Dipstick
2. Fill cap

4. Remove the dipstick and wipe it with a clean rag (Figure 76).
5. Place the dipstick into the filler neck; then remove it and check level of fluid (Figure 76).

   If level is not within notched area of the dipstick, add enough high quality hydraulic fluid to raise level to within the notched area. **Do not overfill**.
6. Replace the dipstick and thread the fill cap finger-tight onto filler neck.
7. Check all hoses and fittings for leaks.

Changing the Hydraulic Oil And Filter

Service Interval: After the first 200 hours

Every 800 hours

1. Disengage the PTO, move the motion control levers to the neutral locked position and set the parking brake.
2. Move the throttle lever to the Slow position, stop the engine, remove the key, and wait for all moving parts to stop before leaving the operating position.
3. Place a large pan under the hydraulic reservoir and transmission case and remove the plugs, draining all of the hydraulic fluid (Figure 77).

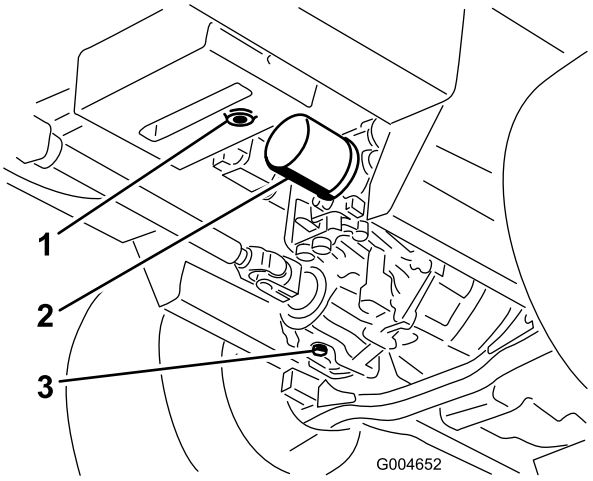

Figure 77

1. Hydraulic reservoir drain plug
2. Filter
3. Transmission case drain plug

4. Clean the area around the hydraulic oil filter and remove it (Figure 77).
5. Immediately install a new hydraulic oil filter.
6. Install the hydraulic reservoir and transmission case drain plugs.
7. Fill the reservoir to the proper level; refer to Checking the Hydraulic Fluid.
8. Start the engine and check for oil leaks. Allow the engine to run for about five minutes, then shut it off.
9. After two minutes, check the level of the hydraulic fluid; refer to Checking the Hydraulic Fluid.

Storage

Machine

1. Thoroughly clean the machine, deck and the engine, paying special attention to these areas:
   - Radiator and radiator screen
   - Underneath the deck
   - Under the deck belt covers
   - Counterbalance springs
   - PTO shaft assembly
   - All grease fittings and pivot points
   - Remove the control panel and clean out inside of the control box
   - Beneath the seat plate and top of the transmission
2. Check and adjust the tire pressure; refer to Checking Tire Pressure.
3. Check all fasteners for looseness and tighten them as necessary.
4. Grease or oil all grease fittings, pivot points, and transmission by-pass valve pins. Wipe off any excess lubricant.
5. Lightly sand and use touch up paint on painted areas that are scratched, chipped or rusted. Repair any dents in the metal body.
6. Service the battery and cables as follows:
   A. Remove the battery terminals from the battery posts.
   B. Clean the battery, terminals, and posts with a wire brush and baking soda solution.
   C. Coat the cable terminals and battery posts with Grafo 112X skin-over grease (Toro Part No. 505-47) or petroleum jelly to prevent corrosion.
   D. Slowly recharge the battery for 24 hours every 60 days to prevent lead sulfation of the battery.

Engine

1. Drain the engine oil from the oil pan and replace the drain plug.
2. Remove and discard the oil filter. Install a new filter.
3. Refill the engine with 3.8 liters (4 quarts) of recommended motor oil. Refer to Changing the Engine Oil.
4. Start the engine and run it at idle speed for two minutes.
5. Drain the fuel from the fuel tank, fuel lines, pump, filter, and separator. Flush the fuel tank with clean diesel fuel and connect all fuel lines.
6. Thoroughly clean and service the air cleaner assembly.
7. Seal the air cleaner inlet and the exhaust outlet with weather proof masking tape.

8. Check the oil filler cap and fuel tank cap to ensure they are securely in place.

Notes:

The Toro Total Coverage Guarantee

A Limited Warranty

Conditions and Products Covered

The Toro Company and its affiliate, Toro Warranty Company, pursuant to an agreement between them, jointly warrant your Toro Commercial product (“Product”) to be free from defects in materials or workmanship for two years or 1500 operational hours*, whichever occurs first. This warranty is applicable to all products with the exception of Aerators (refer to separate warranty statements for these products). Where a warrantable condition exists, we will repair the Product at no cost to you including diagnostics, labor, parts, and transportation. This warranty begins on the date the Product is delivered to the original retail purchaser.
* Product equipped with an hour meter.

Instructions for Obtaining Warranty Service

You are responsible for notifying the Commercial Products Distributor or Authorized Commercial Products Dealer from whom you purchased the Product as soon as you believe a warrantable condition exists. If you need help locating a Commercial Products Distributor or Authorized Dealer, or if you have questions regarding your warranty rights or responsibilities, you may contact us at:

Toro Commercial Products Service Department
Toro Warranty Company
8111 Lyndale Avenue South
Bloomington, MN 55420-1196

952–888–8801 or 800–952–2740
E-mail: commercial.warranty@toro.com

Owner Responsibilities

As the Product owner, you are responsible for required maintenance and adjustments stated in your *Operator's Manual*. Failure to perform required maintenance and adjustments can be grounds for disallowing a warranty claim.

Items and Conditions Not Covered

Not all product failures or malfunctions that occur during the warranty period are defects in materials or workmanship. This warranty does not cover the following:

- Product failures which result from the use of non-Toro replacement parts, or from installation and use of add-on, or modified non-Toro branded accessories and products. A separate warranty may be provided by the manufacturer of these items.
- Product failures which result from failure to perform recommended maintenance and/or adjustments. Failure to properly maintain your Toro product per the Recommended Maintenance listed in the *Operator’s Manual* can result in claims for warranty being denied.
- Product failures which result from operating the Product in an abusive, negligent, or reckless manner.
- Parts subject to consumption through use unless found to be defective. Examples of parts which are consumed, or used up, during normal Product operation include, but are not limited to, brake pads and linings, clutch linings, blades, reels, rollers and bearings (sealed or greasable), bed knives, spark plugs, castor wheels and bearings, tires, filters, belts, and certain sprayer components such as diaphragms, nozzles, and check valves, etc.
- Failures caused by outside influence. Conditions considered to be outside influence include, but are not limited to, weather, storage practices, contamination, use of unapproved fuels, coolants, lubricants, additives, fertilizers, water, or chemicals, etc.
- Failure or performance issues due to the use of fuels (e.g. gasoline, diesel, or biodiesel) that do not conform to their respective industry standards.
- Normal noise, vibration, wear and tear, and deterioration.
- Normal “wear and tear” includes, but is not limited to, damage to seats due to wear or abrasion, worn painted surfaces, scratched decals or windows, etc.

Parts

Parts scheduled for replacement as required maintenance are warranted for the period of time up to the scheduled replacement time for that part. Parts replaced under this warranty are covered for the duration of the original product warranty and become the property of Toro. Toro will make the final decision whether to repair any existing part or assembly or replace it. Toro may use remanufactured parts for warranty repairs.

Deep Cycle and Lithium-Ion Battery Warranty:

Deep cycle and Lithium-Ion batteries have a specified total number of kilowatt-hours they can deliver during their lifetime. Operating, recharging, and maintenance techniques can extend or reduce total battery life. As the batteries in this product are consumed, the amount of useful work between charging intervals will slowly decrease until the battery is completely worn out. Replacement of worn out batteries, due to normal consumption, is the responsibility of the product owner. Battery replacement may be required during the normal product warranty period at owner’s expense. Note: (Lithium-Ion battery only): A Lithium-Ion battery has a part only prorated warranty beginning year 3 through year 5 based on the time in service and kilowatt hours used. Refer to the *Operator's Manual* for additional information.

Maintenance is at Owner’s Expense

Engine tune-up, lubrication, cleaning and polishing, replacement of filters, coolant, and completing recommended maintenance are some of the normal services Toro products require that are at the owner’s expense.

General Conditions

Repair by an Authorized Toro Distributor or Dealer is your sole remedy under this warranty.

Neither The Toro Company nor Toro Warranty Company is liable for indirect, incidental or consequential damages in connection with the use of the Toro Products covered by this warranty, including any cost or expense of providing substitute equipment or service during reasonable periods of malfunction or non-use pending completion of repairs under this warranty. Except for the Emissions warranty referenced below, if applicable, there is no other express warranty. All implied warranties of merchantability and fitness for use are limited to the duration of this express warranty.

Some states do not allow exclusions of incidental or consequential damages, or limitations on how long an implied warranty lasts, so the above exclusions and limitations may not apply to you. This warranty gives you specific legal rights, and you may also have other rights which vary from state to state.

Note regarding engine warranty:

The Emissions Control System on your Product may be covered by a separate warranty meeting requirements established by the U.S. Environmental Protection Agency (EPA) and/or the California Air Resources Board (CARB). The hour limitations set forth above do not apply to the Emissions Control System Warranty. Refer to the Engine Emission Control Warranty Statement supplied with your product or contained in the engine manufacturer’s documentation for details

Countries Other than the United States or Canada

Customers who have purchased Toro products exported from the United States or Canada should contact their Toro Distributor (Dealer) to obtain guarantee policies for your country, province, or state. If for any reason you are dissatisfied with your Distributor's service or have difficulty obtaining guarantee information, contact the Toro importer.