FORM NO. 3313-588 Rev. A

TORO

MODEL NO. 38570-9000001 thru 0000001 & UP
MODEL NO. 38580-9000001 thru 0000001 & UP

OPERATOR'S MANUAL

828 and 1132 POWER SHIFT SNOWTHROWERS

⚠ SAFETY INSTRUCTIONS

The 828 and 1132 POWER SHIFT SNOWTHROWERS meet or exceed the Outdoor Power Equipment Institute's safety standards for snowthrowers; thus, Toro proudly displays the OPEI safety seal. To assure maximum safety, optimum performance, and to gain knowledge of the product, it is essential that you or any other operator of the snowthrower read and understand the contents of this manual before the engine is ever started. Pay particular attention to the safety alert symbol ⚠ which means CAUTION, WARNING OR DANGER — "personal safety instruction." Read and understand the instruction because it has to do with safety. Failure to comply with instruction may result in personal injury.

The following instructions are comparable to the Instructions For Safety Snowthrowing adopted by the American National Standards Institute (ANSI). The snowthrower is designed and tested to offer reasonably safe service; however, failure to comply with the following Safety Instructions **MAY RESULT IN PERSONAL INJURY.**

BEFORE OPERATING

1. Read and understand the contents of this manual before operating the snowthrower. Become familiar with all controls and know how to stop the engine quickly.

2. Keep everyone, especially children and pets, away from area of operation. Never allow children to operate the snowthrower. Adults should operate the snowthrower only after reading this manual.

3. Inspect area thoroughly where snowthrower will be used. Remove doormats, sleds, boards, sticks, wire, and any other foreign objects which might be picked up and thrown by the snowthrower.

4. Keep all shields and safety devices in place. If a shield, safety device, or decal is illegible or damaged, repair or replace it before beginning operation. Also, tighten any loose nuts, bolts, or screws.

5. Wear adequate winter clothing and rubber boots that will assure secure footing on slippery surfaces. Do not wear loose fitting clothing that could possibly get caught in moving parts.

6. Adjust both skids so auger housing clears gravel or crushed rock surfaces.

7. Before starting the engine, move speed shift control to N (neutral).

8. Always use a grounded three wire plug and cord to start snowthrower equipped with an electric starter.

9. Fill fuel tank with gasoline before starting the engine. Avoid spilling any gasoline. Since gasoline is highly flammable, handle it carefully. **DO NOT SMOKE WHILE HANDLING GASOLINE.**

A. Use an approved gasoline container.

©The Toro Company-1988, Rev. 1989

⚠ SAFETY INSTRUCTIONS

B. Fill fuel tank outdoors, not indoors. **NEVER ADD FUEL TO AN ENGINE THAT IS RUNNING OR HOT.** Engine must be cool to prevent a potential fire hazard.

C. Open doors if engine will be run in the garage because exhaust fumes are dangerous and could possibly be deadly. Do not run engine indoors.

D. Wipe up any spilled gasoline, and reinstall gasoline container cap and snowthrower fuel tank cap securely before starting the engine.

WHILE OPERATING

10. STAY BEHIND THE HANDLES AND AWAY FROM DISCHARGE OPENING WHILE OPERATING THE SNOW-THROWER. Keep face, hands, feet, and any other part of your body or clothing away from concealed, moving, or rotating parts.

11. BEFORE ADJUSTING, CLEANING, REPAIRING, AND INSPECTING THE SNOWTHROWER, AND BEFORE UNCLOGGING THE DISCHARGE CHUTE, SHUT ENGINE OFF AND WAIT FOR ALL MOVING PARTS TO STOP. ALSO, PULL WIRE OFF SPARK PLUG AND KEEP WIRE AWAY FROM THE PLUG TO PREVENT ACCIDENTAL STARTING. USE A STICK TO REMOVE OBSTRUCTIONS.

12. Keep people and pets a safe distance away from the snowthrower and area of operation.

13. Allow engine to warm up for about 2 minutes and machine to adjust to outdoor temperature before clearing snow.

14. Do not run engine indoors, except when starting engine. When starting engine indoors, open outside doors because exhaust gasses are dangerous.

15. Operate the snowthrower only when there is good visibility or light. Always maintain secure footing and balance and keep a firm grip on the handles, especially when operating in reverse. Walk; never run.

16. Be attentive when using the snowthrower, and stay alert for holes in the terrain and other hidden hazards. Be careful when clearing snow from a gravel drive because stones could be picked up and thrown if the skids are not adjusted so auger housing clears all rocks.

17. Do not make any adjustments while the engine is running.

18. Never direct discharge of snow or operate snowthrower near bystanders, glass enclosures, automobiles and trucks, window wells or a drop-off without proper adjustment of the snow discharge angle.

19. STAY AWAY FROM DISCHARGE OPENING WHILE OPERATING THE SNOWTHROWER. Keep face, hands, feet, and any other part of your body or clothing away from concealed, moving, or rotating parts.

20. Clear snow from slopes by going up and down, never across the face. Use caution when changing directions. Use lower gear and rear wheel position when operating on slopes. Never clear snow from steep slopes.

21. DO NOT USE SNOWTHROWER ON A ROOF.

22. Do not overload the snowthrower by clearing snow at too fast a rate.

23. If a solid object is hit or snowthrower vibrates abnormally, shut engine off and wait for all moving parts to stop. Pull high tension wire off spark plug and check snowthrower immediately for possible damage, an obstruction, or loose parts. Vibration is generally a sign of trouble. Repair any damage before restarting engine and operating snowthrower again.

⚠ SAFETY INSTRUCTIONS

24. Do not touch engine while it is running or soon after it is stopped because the engine will be hot enough to cause a burn. Do not add oil or check oil level in crankcase when engine is running because this could be a potential hazard.

25. Before leaving the operator's position (behind handles), rotate ignition key to OFF. Remove key from switch if snowthrower will be left unattended.

26. Never operate snowthrower at high transport speeds on slippery surfaces. Use care when backing.

27. Let snowthrower run for a few minutes after clearing snow so moving parts do not freeze.

MAINTAINING SNOWTHROWER

28. Perform only those maintenance instructions described in this manual. Shut engine off before performing any maintenance service or adjustment. Additionally, pull high tension wire off spark plug and keep wire away from plug to prevent accidental starting. If major repairs are ever needed, contact your local Authorized TORO Service Dealer for assistance.

29. Keep snowthrower in safe operating condition by keeping nuts, bolts, and screws tight. Check engine mounting bolts frequently to assure they are tight.

30. Do not overspeed the engine by changing governor settings. Recommended maximum engine speed is 3500 rpm. To assure safety and accuracy, check maximum engine speed (3500 rpm) with a tachometer.

31. Allow engine to cool before storing snowthrower in an enclosure such as a garage or storage shed, and make sure the snowthrower fuel tank is empty. **NEVER STORE SNOWTHROWER IN HOUSE (LIVING AREA) OR BASEMENT BECAUSE GASOLINE AND FUMES ARE HIGHLY FLAMMABLE, EXPLOSIVE, AND DANGEROUS IF INHALED.** Do not store snowthrower near any open flame or where gasoline fumes may be ignited by a spark.

32. When storing the snowthrower for an extended time—off season storage or 30 days—drain gasoline from fuel tank to prevent a potential hazard. Store gasoline in a safety-approved red metal container. Remove key from ignition switch when storing snowthrower. Store key in a memorable place.

33. At the time of manufacture, the snowthrower conformed with and exceeded safety standards in effect for snowthrowers. Therefore, to assure optimum performance and safety, purchase genuine TORO replacement parts and accessories to keep the TORO all TORO. **NEVER USE "WILL FIT" REPLACEMENT PARTS AND ACCESSORIES.** The TORO logo assures genuineness.

34. For safety reasons, use only those accessories and attachments recommended by The TORO Company to assure continued safety certification of the product. Using unapproved accessories and attachments could contribute to a potential hazard.

SAFETY DECALS

Safety decals and instructions are easily visible to the operator and are located near any area of potential danger. Replace any decal that is damaged.



ON AUGER HOUSING
(Part No. 53-7670)

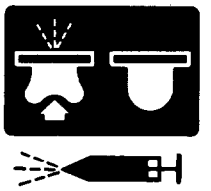

NEXT TO PRIMER
(Part No. 63-2320)



ON CHUTE
(Part No. 63-3740)

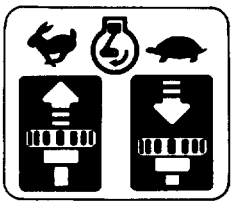

ALONGSIDE THROTTLE
(Part No. 63-2340)

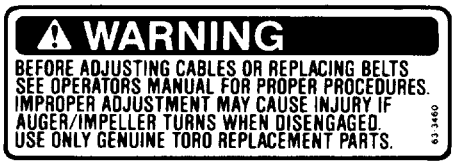

ON ENGINE BASE
(Part No. 63-3460)



ON ENGINE
(Part No. 63-2360)



ON ENGINE
(Part No. 62-7290)

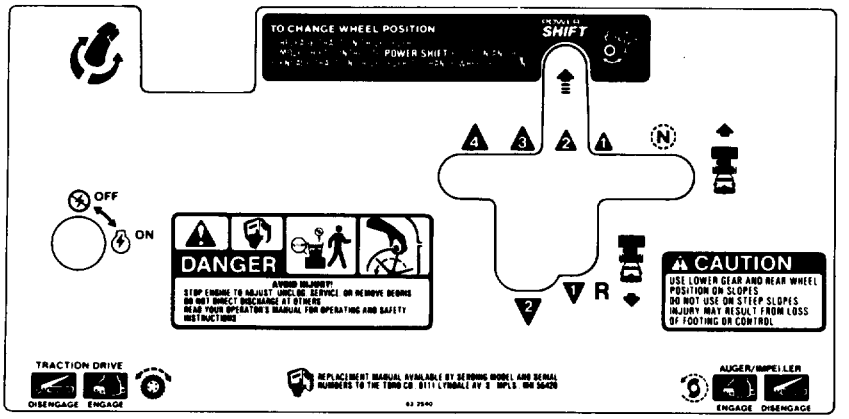

ON CONTROL PANEL
(Part No. 63-2540)

LOOSE PARTS

Part	Qty	Use
Flange head capscrew—5/16-18 x 5/8" lg.	6	Mount Auger Housing, page 6
Lower belt cover	1	
Flange head capscrew—1/4-20 x 1/2" lg.	5	Mount Belt Covers, page 6
Cable cover	1	
Shift rod	1	
Locknut—3/8-16	2	Install Shift Rod, page 7
Discharge chute	1	Install Discharge Chute, page 7
Worm gear	1	
Gear bracket	1	
Carriage bolt—5/16-18 x 1" lg.	1	Install Chute Control Gear, page 8
Flat washer	1	
Locknut—5/16	1	
Key	1	Use in Ignition Switch
Registration card	2	Use to register product with factory

Specifications and design subject to change without notice.

OPTIONS
Heavy duty skids, Part No. 74-1100

TABLE OF CONTENTS

Page

Safety Instructions 1-3
Safety Decals 4
Loose Parts 5
Options 5
Assembly Instructions 6-8
Before Operating 8-10
- Fill Crankcase With Oil 8-9
- Fill Fuel Tank With Gasoline .. 9-10

Controls 10-11
Starting and Stopping Instructions . 12
Operating Instructions 12-14
- Power Shift Operation 12-13
- Free Wheeling or Self-Propelled Drive 13
- Snowthrowing Tips 13
- Adjusting Skids 13-14
- Adjusting Scraper 14

Maintenance 15-21
- Draining Gasoline 15
- Lubricating Snowthrower 15
- Changing Crankcase Oil 15-16
- Replacing Auger Gear Box Oil .. 16
- Adjusting Auger/Impeller Drive Belt 16-17
- Adjusting Traction Drive Belt 17
- Replacing Drive Belts 18
- Adjusting Drive Chain 18-19
- Adjusting Carburetor 19-20
- Replacing Spark Plug 21
- Preparing Snowthrower for Storage 21

Identification and Ordering 22
Toro Service Support 22
Maintenance Record 23
The Toro Promise 24

ASSEMBLY INSTRUCTIONS

Note: Determine left and right sides of snowthrower by standing in the normal operating position.

MOUNT AUGER HOUSING (Fig. 1-3)

1. Remove (2) flange head capscrews securing idler pulley assembly to engine frame. Remove idler pulley assembly.

2. Align auger housing and engine frame mounting holes (Fig. 1).

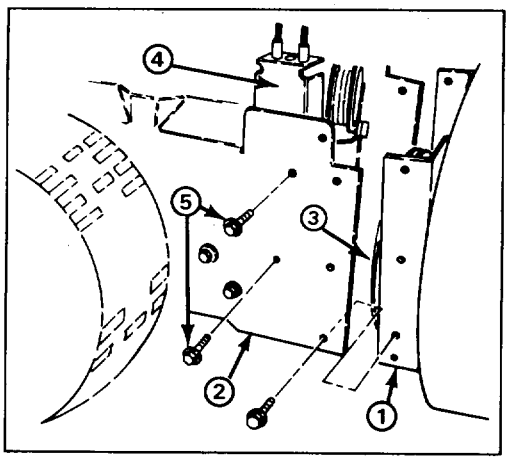

Figure 1

1. Auger housing
2. Engine frame
3. Impeller pulley
4. Idler pulley assembly
5. Mounting screws (2)

3. Route impeller belt around impeller pulley.

4. Secure auger housing to engine frame with (6) 5/16-18 x 5/8" lg. flange head capscrews.

5. Reinstall idler pulley assembly. Make sure idler pulleys are aligned with belts when reinstalling idler pulley assembly.

6. Tip snowthrower up on auger housing.

7. Mount lower belt cover to underside of auger housing and engine frame with (2) 1/4-20 x 1/2" lg. flange head capscrews (Fig. 2). Make sure belt cover mounting tabs are positioned to rear of engine frame member.

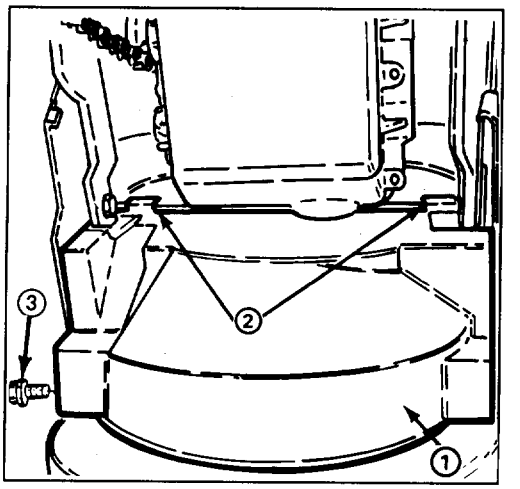

Figure 2

1. Lower belt cover (shown from bottom)
2. Mounting tabs
3. Flange head capscrew

8. Mount upper belt cover to engine frame with (3) 1/4-20 x 1/2" lg. flange head capscrews (Fig. 3).

9. Slide cable cover onto cables and into hole in belt cover.

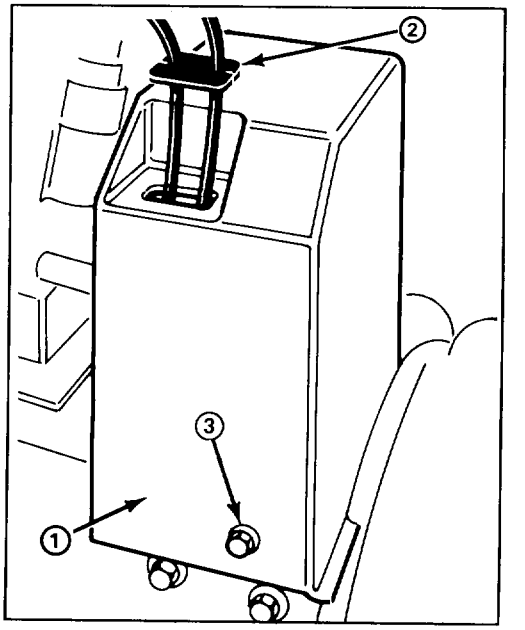

Figure 3

1. Upper belt cover
2. Cable cover
3. Flange head capscrew

ASSEMBLY INSTRUCTIONS

INSTALL SHIFT ROD (Fig. 4)

1. Insert upper shift rod ball joint stud through front of shift bracket and secure with 3/8–16 locknut.

Note: Shift rod to be positioned with bend rearward.

2. Insert bottom ball joint stud through right side of transmission lever and secure with 3/8–16 locknut.

3. Shift into 2nd gear and check shift rod alignment with Power Shift slot.

Note: If gear shift lever is not aligned with Power Shift slot in control panel (Fig. 4, inset), shift rod length must be adjusted as follows:

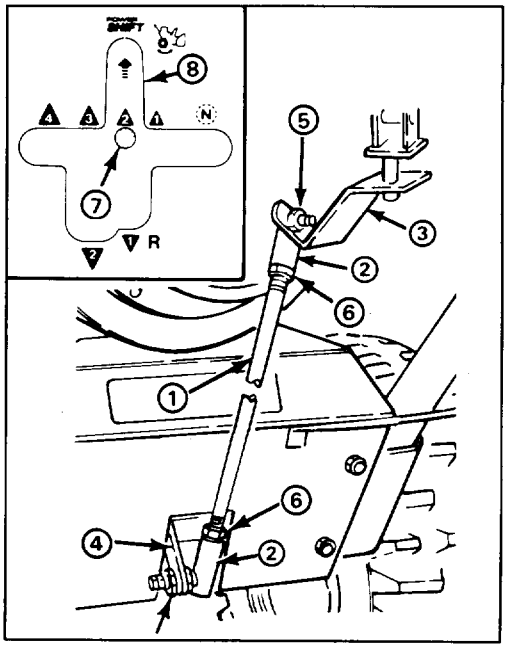

Figure 4

1. Shift rod
2. Ball joint
3. Shift bracket
4. Transmission lever
5. Locknut
6. Jam nut
7. Gear shift lever
8. Power shift slot

A. Disconnect ball joint from transmission lever and loosen jam nut.

B. Rotate ball joint up or down, until gear shift lever is aligned with Power Shift slot.

C. Reinstall ball joint to transmission lever and tighten jam nut.

INSTALL DISCHARGE CHUTE (Fig. 5)

Note: Before installing discharge chute, apply a light coat of low temperature grease to chute ring.

1. Set discharge chute—open side forward—onto auger discharge opening, so plastic chute retainers are positioned on chute ring. Make sure chute retainer guide pins are inserted into holes in chute gear.

2. Tighten machine screw and locknut, on left side, until chute retainer plate is positioned against plastic chute retainer and discharge chute is secured to chute ring.

3. Push chute retainers, on right side, toward discharge chute (slotted) and tighten machine screw.

4. Make sure chute rotates freely on ring. Move right hand retainer outward to ease operation.

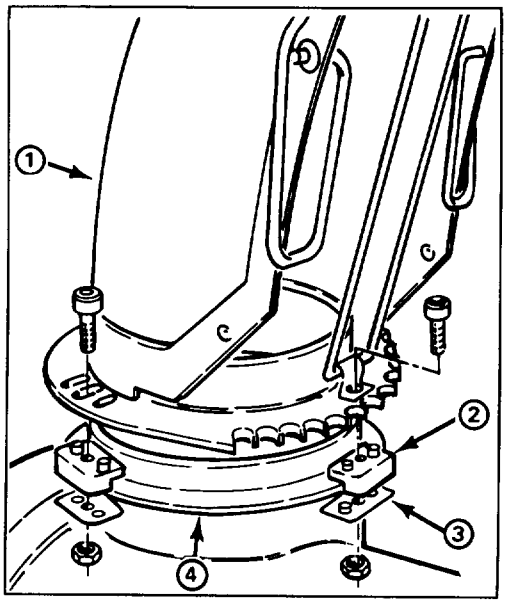

Figure 5

1. Discharge chute
2. Plastic chute retainer
3. Chute retainer plate
4. Chute ring

ASSEMBLY INSTRUCTIONS

INSTALL CHUTE CONTROL GEAR (Fig. 6)

1. Insert the 5/16-18 x 1" lg. carriage bolt into gear bracket mounting hole.
2. Position worm gear into bracket, align holes, and insert chute gear rod through bracket and gear.

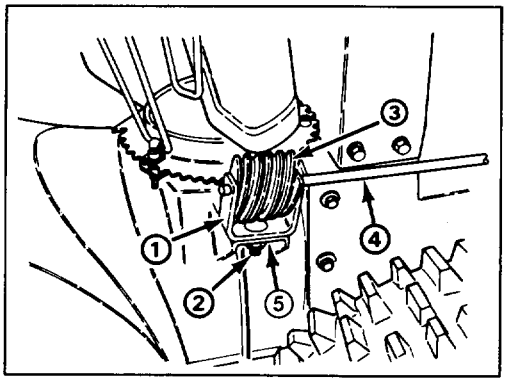

Figure 6

1. Gear bracket
2. Carriage bolt, flat washer & locknut
3. Worm gear
4. Chute gear rod
5. Mounting flange

3. Loosely mount worm gear and bracket to mounting flange with carriage bolt, flat washer, and locknut.
4. Slide worm gear into teeth of chute gear and tighten locknut.
5. Check operation. Move gear slightly outward if binding is evident.

CHECK TIRE PRESSURE

IMPORTANT: Check pressure of tires because they are over-inflated at the factory for shipping. Therefore, before the snowthrower is operated, reduce pressure in both tires to 10-15 psi equally.

TIRE CHAINS

If snowthrower is to be equipped with optional tire chains, wheels must be pinned to outer axle holes (Fig. 16).

CHECK AUGER GEAR BOX OIL (Fig. 7)

1. Move snowthrower to a level surface.
2. Remove pipe plug from gear box.
3. Check oil level in gear box. Oil must be at point of overflowing in filler opening.

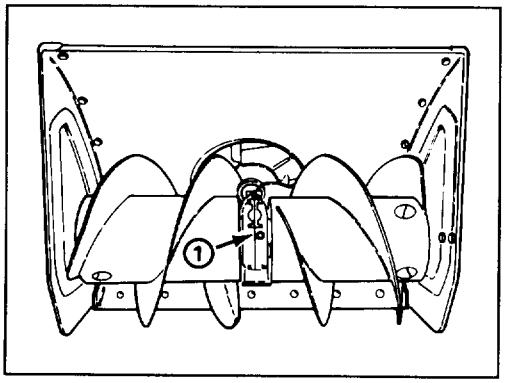

Figure 7

1. Pipe plug

4. If level of oil is low, add GL-5 or GL-6 SAE 85-95 EP transmission oil to the gear box until point of overflow.
5. Install pipe plug in gear box.

BEFORE OPERATING

FILL CRANKCASE WITH OIL (Fig. 8)

The engine is shipped from the factory without oil in the crankcase. Therefore, before trying to start the engine, oil must be added to the crankcase.

IMPORTANT: Check level of oil every 5 operating hours or each time unit is used. Initially, change oil after the first 2 hours of operation; thereafter, under normal conditions, change oil after every 25 hours of operation or annually.

1. Move unit to a level surface to assure an accurate oil level reading.
2. Clean area around dipstick to prevent foreign matter from entering filler hole when dipstick is removed.

3. Remove dipstick from crankcase (Fig. 8).

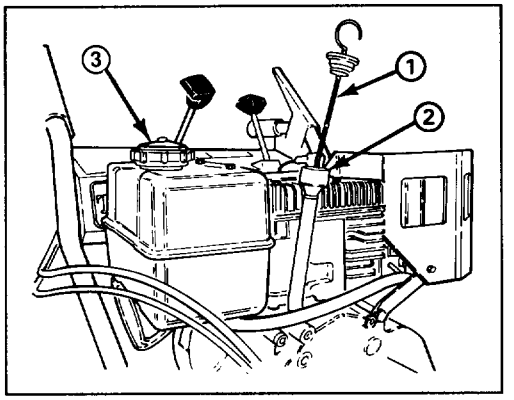

Figure 8

1. Dipstick
2. Filler hole
3. Fuel tank cap

4. Slowly pour SAE 5W-30 or SAE 10 oil into the filler hole, using oil filler chart below. The engine uses any high-quality detergent oil having the American Petroleum Institute (API) "service classification"—SE or SF.

Oil Fill Chart

828 Snowthrower	44 ounces of oil
1132 Snowthrower	48 ounces of oil

Note: Dipstick must be fully installed to assure accurate gauging of oil level. DO NOT OVERFILL.

FILL FUEL TANK WITH GASOLINE

THE TORO COMPANY STRONGLY RECOMMENDS THE USE OF CLEAN, FRESH **UNLEADED** REGULAR GASOLINE IN TORO GASOLINE POWERED PRODUCTS. UNLEADED GASOLINE BURNS CLEANER, EXTENDS ENGINE LIFE, AND PROMOTES GOOD STARTING BY REDUCING THE BUILDUP OF COMBUSTION CHAMBER DEPOSITS. LEADED GASOLINE CAN BE USED IF UNLEADED IS NOT AVAILABLE.

⚠ WARNING

Because gasoline is flammable, caution must be used when storing or handling it. Do not fill fuel tank while engine is running, hot, or when unit is in an enclosed area. Keep away from open flame and electrical spark. DO NOT SMOKE while filling the fuel tank to prevent the possibility of an explosion. Always fill fuel tank outside and wipe up any spilled gasoline before starting engine. Use a funnel or spout to prevent spilling gasoline, and fill fuel tank to about 1/2" (13 mm) from the top of the tank, not the filler neck.

Store gasoline in a clean, approved container and keep the cap in place on the container. Keep gasoline in a cool, well-ventilated place—never in the house. To assure volatility, do not buy more than a 30 day supply of gasoline. Gasoline is a fuel for internal combustion engines. Therefore, do not use it for any other purpose. Since many children like the smell of gasoline, keep it out of their reach because the fumes are explosive and dangerous to inhale.

IMPORTANT: NEVER USE METHANOL, GASOLINE CONTAINING METHANOL, GASOHOL CONTAINING MORE THAN 10% ETHANOL, PREMIUM GASOLINE, OR WHITE GAS BECAUSE ENGINE FUEL SYSTEM DAMAGE COULD RESULT.

BEFORE OPERATING

DO NOT USE FUEL ADDITIVES OTHER THAN THOSE MANUFACTURED FOR FUEL STABILIZATION DURING STORAGE (SUCH AS TORO'S PRESERVIT OR A SIMILAR PRODUCT). ADDITIVES SHOULD NOT BE USED TO TRY TO ENHANCE THE POWER OR PERFORMANCE OF MACHINE.

1. Clean area around the fuel tank cap (Fig. 8). Remove cap from fuel tank and fill tank to within 1/2" (13 mm) from the top with unleaded regular gasoline. Reinstall fuel tank cap. Fuel tank capacity is 4 quarts.

CONTROLS

Auger/Impeller Control (Fig. 9)—Control has two positions: ENGAGE and DISENGAGE. To engage auger and impeller, compress lever against right handle grip. To disengage, release lever.

Traction Drive Control (Fig. 9)—To engage traction or activate power shift system, lever must be compressed against left handle grip. To stop traction, release lever.

Speed Shift Control (Fig. 9)—The control has four speeds forward and two reverse and also controls power shifting of wheels. To select speeds, move shift control to desired position.

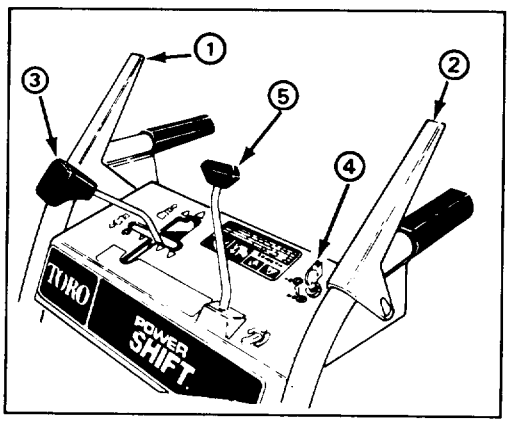

Figure 9

1. Auger/impeller control
2. Traction drive control
3. Speed shift control
4. Ignition switch
5. Discharge chute control

Note: When shifting gears to change direction or shifting to the Power Shift position, traction drive control must be released. On-the-go shifting may be accomplished between any of the forward speeds without releasing traction drive control.

Auger Lock-Up (Fig. 9)—When auger/impeller control and traction drive control are both compressed, the traction control locks the auger/impeller control down. Releasing the traction control releases the auger/impeller.

Discharge Chute Control (Fig. 9)—Rotate discharge chute control clockwise to move discharge chute to the right and counterclockwise to move chute to the left.

Ignition Switch (Fig. 9)—Switch has two position: ON and OFF. Rotate key to ON position before starting engine. To stop engine, rotate key to OFF.

Throttle (Fig. 10)—Moving the throttle upward increases the engine speed.

Choke (Fig. 10)—Choke is located on left side of engine. Push choke down to FULL choke position to start a cold engine. As engine warms up, move choke gradually to OFF.

Primer (Fig. 10)—Press primer to pump small amount of gasoline into engine for improved cold weather starting.

CONTROLS

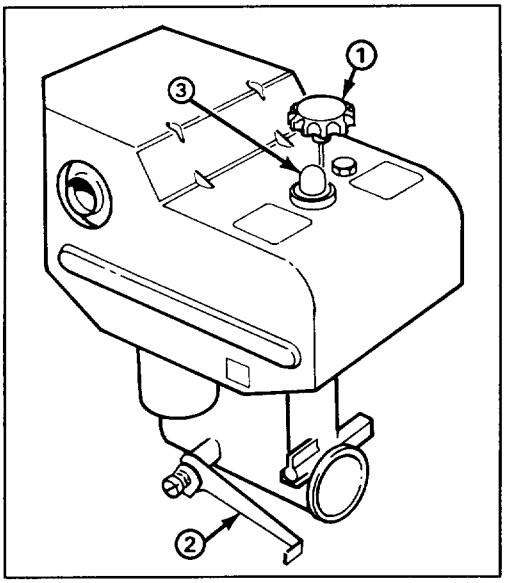

Figure 10

1. Throttle
2. Choke
3. Primer

Fuel Shut-Off Valve (Fig. 11)—Valve is located under fuel tank. Close valve to stop fuel flow from fuel tank and open valve to allow fuel to flow to the carburetor. Close valve when snowthrower is not used.

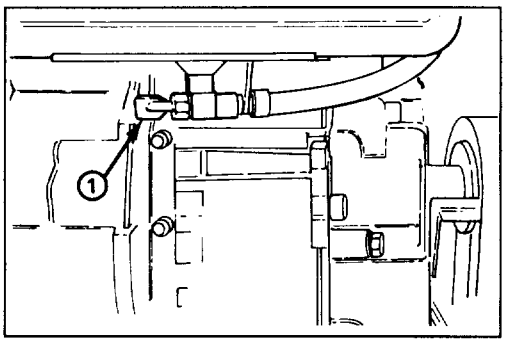

Figure 11

1. Fuel shut-off valve

Deflector Handle (Fig. 12)—Deflector handle on top of discharge chute is used to control the height of the snow stream.

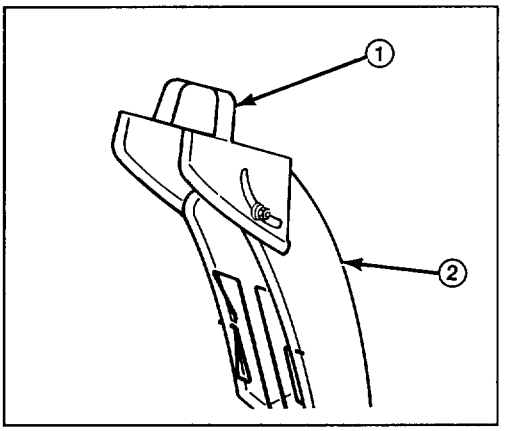

Figure 12

1. Deflector handle
2. Discharge chute

Recoil Starter (Fig. 13)—Recoil starter is on back side of engine. Pull recoil starter to start engine.

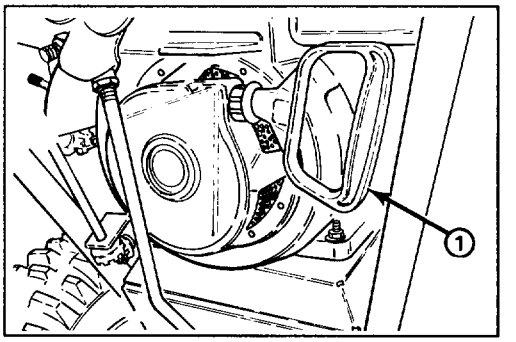

Figure 13

1. Recoil starter

STARTING/STOPPING INSTRUCTIONS

TO START ENGINE

IMPORTANT: Check auger and impeller to assure that both parts are not frozen solid, but free to rotate. Also, make sure discharge chute is not obstructed.

1. Move speed shift control to N (neutral) and throttle to FAST (Fig. 9).
2. Open fuel shut-off valve below fuel tank (Fig. 11).
3. Move choke to ON choke position (Fig. 10).
4. Rotate ignition key to ON (Fig. 9).
5. Depress primer (Fig. 10) five times.
6. Grasp recoil starter handle (Fig. 13) and pull it out slowly until positive engagement results; then pull vigorously to start the engine. Keep firm grip on starter handle and return the rope slowly.

Note: If engine does not start or if temperature is −10° F or below, additional priming may be required.

7. After engine starts, immediately move choke (Fig. 10) to 3/4 position. As engine warms up, move choke to 1/2 position; then to OFF position. If engine falters, return choke to 1/2 position. When engine warms sufficiently, move choke to OFF position.

BEFORE STOPPING ENGINE

1. Run engine for a few minutes to help dry off any moisture which may have accumulated on engine.
2. With engine running, pull recoil starter with a rapid, continuous full arm stroke three or four times. This helps prevent possible freeze-up of recoil starter due to extreme snow blowing conditions.

Note: Pulling of recoil starter rope produces a loud, clattering sound. This is not harmful to the engine or the starter.

TO STOP ENGINE

1. Release traction and auger/impeller drive controls (Fig. 9).
2. Move speed shift control to N (neutral).
3. Move throttle to slow and rotate ignition key to OFF.

OPERATING INSTRUCTIONS

POWER SHIFT OPERATION

Move wheels rearward to the Power Shift position in heavy and/or drifted snow.

Leave wheels in the front position for light snow or for transporting snowthrower.

1. Release traction drive lever.
2. To move wheels to front or rear position, move shift control fully forward to Power shift position and hold (Fig. 14).
3. Fully engage traction drive lever to move wheels into Power Shift position (Figs. 14 & 15).

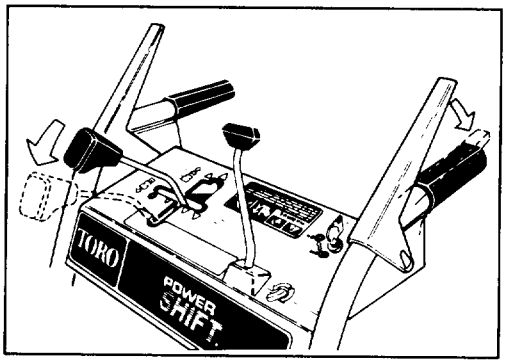

Figure 14

Note: When power shifting it may be necessary to slightly raise handle to assist wheel movement.

OPERATING INSTRUCTIONS

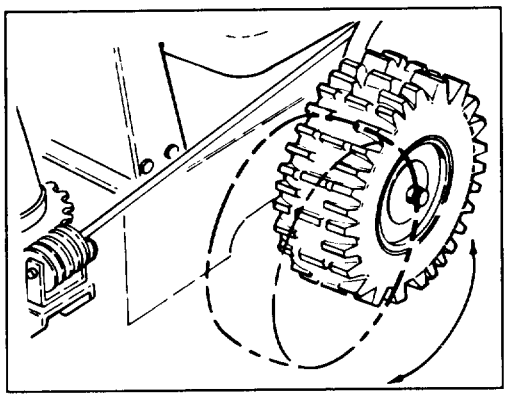

Figure 15

Note: If wheels do not move in desired direction when power shifting, repeat procedure. Wheels must rotate in forward direction to move wheels ahead and rotate rearward to move wheels back.

FREE WHEELING OR SELF-PROPELLED DRIVE

The snowthrower can be free wheeled or engaged for self-propelled operation. When axle pins are through outer axle holes (Fig. 16), snowthrower free wheels. By contrast, when both pins are installed through holes in wheel hub and inner hole of axle (Fig. 16), snowthrower will propel itself.

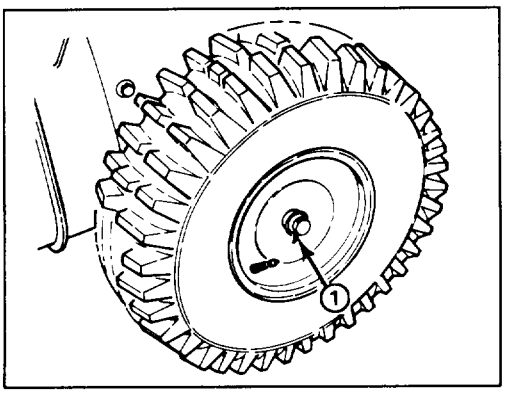

Figure 16

1. Axle pin

SNOWTHROWING TIPS

1. When snowthrower is not being used, close fuel shut-off valve, have speed control in N (neutral) position, and key removed from the switch.
2. Remove snow as soon as possible after it falls. This produces best snow removal results.
3. When in the Power Shift position, push down on handles to increase traction.
4. To remove snow from crushed rock or gravel areas, adjust skids so bottom of auger housing clears the rock: refer to Adjusting Skids, page 13.
5. For concrete or asphalt surfaces, adjust skids so there is 1/8 inch (3 mm) between bottom of auger and concrete or asphalt surface.
6. Discharge snow downwind whenever possible, and overlap each swath to assure complete snow removal. If wheels slip, shift into a lower gear to reduce forward speed.
7. In some snow and cold weather conditions, some controls and moving parts may freeze solid. Therefore, when any control becomes hard to operate, stop the engine; then check all parts for freeze up. DO NOT USE EXCESSIVE FORCE AND TRY TO OPERATE THE CONTROLS WHEN FROZEN. Free all controls and moving parts before operating.

ADJUSTING SKIDS (Fig. 17)

To use snowthrower on concrete or asphalt surfaces, adjust skids using steps 1-2. However, use only step 3 when using snowthrower on gravel or crushed rock surfaces.

1. Move snowthrower to a level surface and move wheels rearward into the Power Shift position.
2. Next, loosen four flange bolts securing both skids to auger side plates. Skids must slide up and down.

3. Adjust both skids so there is 1/8 of an inch between bottom of auger and level surface. When skids are adjusted correctly, tighten flange bolts. Next, check scraper blade that is mounted at bottom of auger housing. Scraper must be parallel with level surface. If scraper is not parallel, adjust skids again. Do not use step 3 after adjusting skids for hard surfaces.

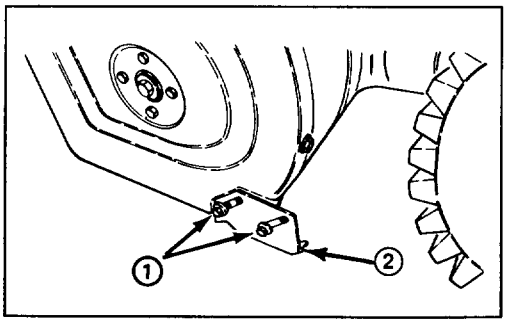

Figure 17

1. Flange bolts 2. Skid

4. Loosen four flange bolts securing both skids to auger side plates. Next, slide skids down as far as possible so auger is as far from the level surface as skid adjustment allows; then tighten flange bolts.

ADJUSTING SCRAPER

If the amount of snow being picked up by the snowthrower begins to decrease, the scraper may need adjustment.

1. Move wheels rearward to the Power Shift position.
2. Loosen the (4) flange bolts securing both skids to the auger side plates (Fig. 17).
3. Next, loosen the (6) carriage bolts securing the scraper to the auger housing (Fig. 18).

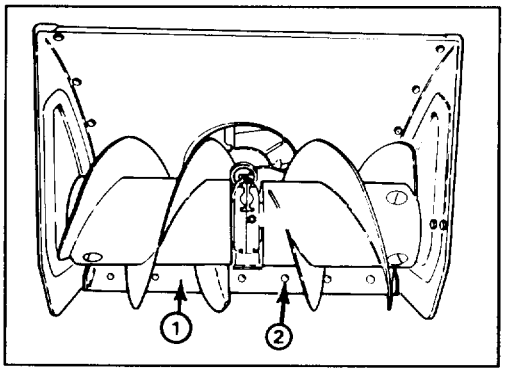

Figure 18

1. Scraper 2. Carriage bolt

4. Slide the scraper up and down until there is 1/8" between the bottom of the scraper and a level surface.
5. When the scraper is adjusted correctly, tighten the (6) carriage bolts securely.
6. Readjust the skids so there is 1/8" between the bottom of the skids and a level surface. Tighten the (4) flange bolts securely.

WARNING

To prevent accidental starting of the engine while performing maintenance, rotate ignition key to off and remove it from the switch. Next, pull wire off spark plug and make sure wire does not accidentally touch the plug.

DRAINING GASOLINE

1. Close fuel shut-off valve located under engine (Fig. 19).

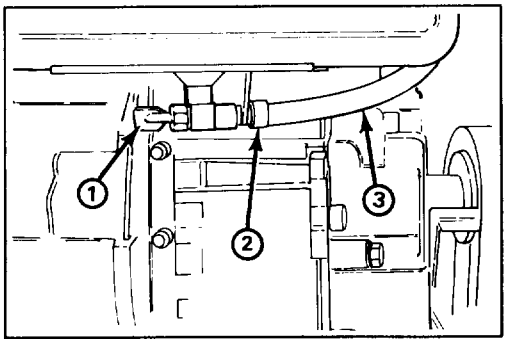

Figure 19

1. Fuel shut-off valve
2. Hose clamp
3. Fuel line

2. Place a clean drain pan under shut-off valve.
3. Loosen hose clamps securing fuel line to valve and slide line off valve (Fig. 19).

WARNING

Since gasoline is highly flammable, drain it outdoors and make sure engine is cool to prevent a potential fire hazard. Wipe up any gasoline that may have spilled. Do not drain gasoline near any open flame or where gasoline fumes may be ignited by a spark. DO NOT SMOKE a cigar, cigarette, or pipe when handling gasoline.

4. Open valve allowing fuel to flow into drain pan.
5. Reinstall fuel line and secure with hose clamp.

LUBRICATING SNOWTHROWER

1. Annually lubricate drive chain with chain lubricant (Fig. 20). Wipe up any excess oil.

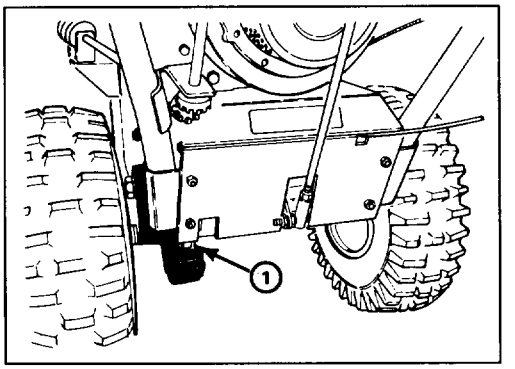

Figure 20

1. Drive chain

CHANGING CRANKCASE OIL (Fig. 21)

Initially, change oil after the first 2 hours of engine operation; thereafter, change oil after every 25 hours of engine operation or annually. If possible, run engine just before changing oil because warm oil flows better and carries more contaminants than cold oil.

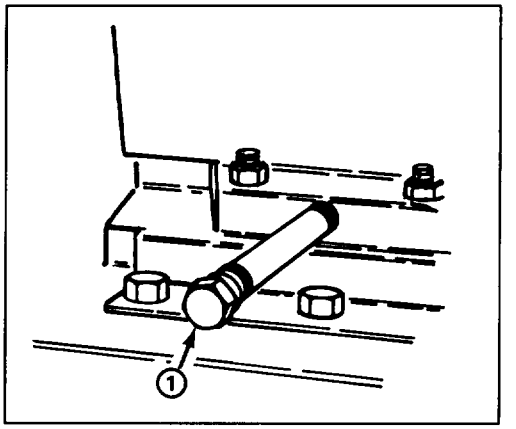

Figure 21

1. Drain cap

1. Pull wire off spark plug and make sure wire does not contact plug accidentally.
2. Clean area around oil drain cap. Next, slide oil drain pan below drain extension; then remove oil drain cap.
3. After all oil is drained, reinstall oil drain cap.
4. Position snowthrower on a level surface. Next, fill crankcase with oil: see Fill Crankcase With Oil, page 8. Wipe up any oil that may have spilled.

REPLACING AUGER GEAR BOX OIL (Fig. 22)

The auger gear box is filled with oil at the factory so regular maintenance is not required. However, if oil must be replaced in gear box:

1. Drain gasoline from fuel tank. Wipe up any spilled gas.
2. Position snowthrower on a level surface.
3. Clean area around pipe plug so dirt is removed.
4. Put a drain pan below front of auger gear box and remove pipe plug: refer to Check Auger Gear Box Oil, page 8.
5. Tip snowthrower forward and hold it up until all oil drains from the gear box.

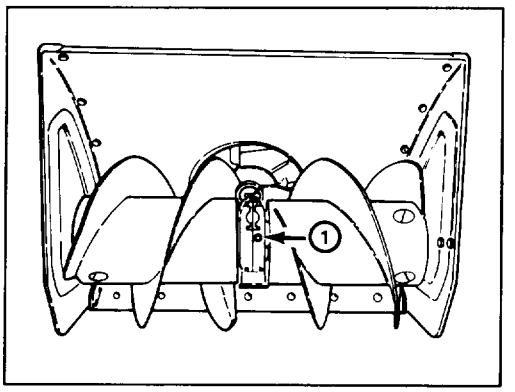

Figure 22

1. Pipe plug

6. Carefully let snowthrower down to its normal position. Make sure it is on a level surface. Next, fill auger gear box with GL-5 or GL-6 SAE 85-95 EP transmission oil to the point of overflow.
7. Install pipe plug in gear box.

ADJUSTING AUGER/IMPELLER DRIVE BELT (Figs. 23-25)

If auger/impeller belt slips, resulting in decreased snowthrowing performance, an adjustment is required. **WHENEVER A NEW BELT IS INSTALLED, AN ADJUSTMENT IS REQUIRED.**

1. Remove (3) flange head capscrews securing belt cover to engine frame and slide belt cover up cables (Fig. 23).

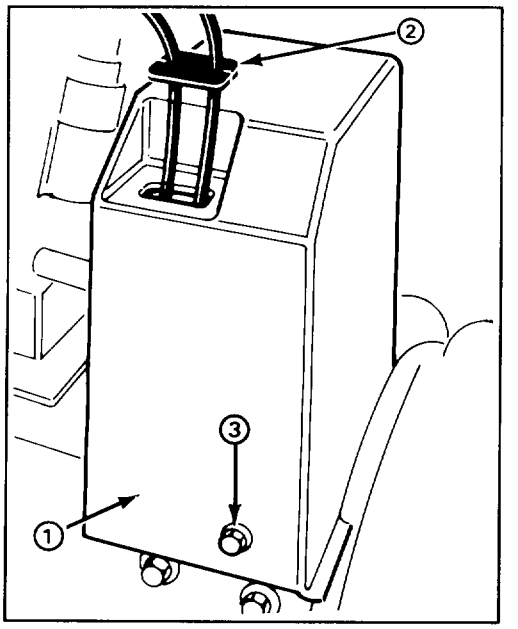

Figure 23

1. Upper belt cover
2. Cable cover
3. Flange head capscrew

2. Check idler and brake adjustment. There should be a minimum clearance of 1/8" between tab on impeller idler warm and brake arm (Fig. 25). If there is less than 1/8" clearance, belt must be replaced.

3. Loosen upper jam nut securing auger/impeller cable to mounting bracket (Fig. 24).

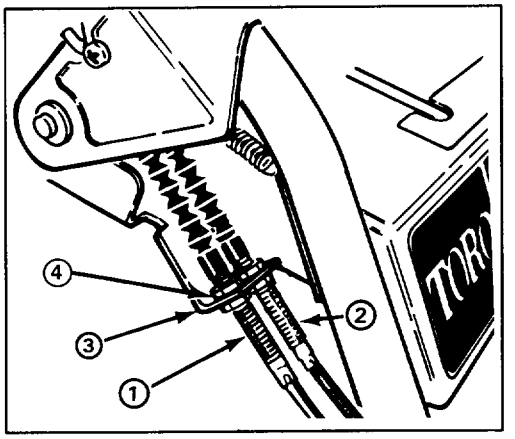

Figure 24

1. Auger/impeller cable
2. Traction cable
3. Mounting bracket
4. Jam nut

4. Rotate bottom jam nut upward to increase belt tension.

Note: When adjusting cable, always rotate nut one turn at a time.

5. Tighten upper jam nut against bracket.

IMPORTANT: Do not adjust the belt too tight because it may cause the auger/impeller to turn when the auger/impeller is in the disengaged position. If this occurs, readjust, loosening belt tension.

⚠ WARNING

Improper adjustment may cause injury if auger/impeller turns when disengaged.

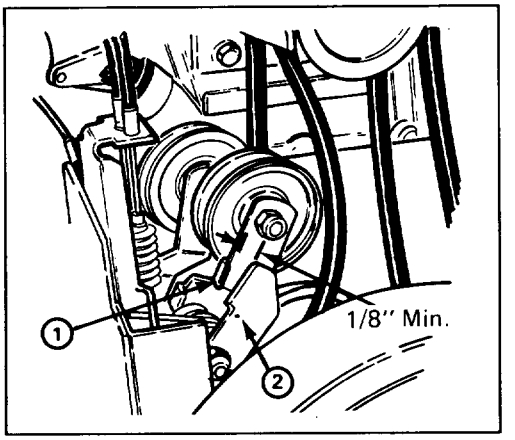

Figure 25

1. Impeller Idler arm
2. Brake arm

6. Recheck idler and brake adjustment: refer to step 2.

7. Reinstall belt cover.

8. Check tension of belt cover by operating the auger. If belt still slips, repeat procedure.

ADJUSTING TRACTION DRIVE BELT (Fig. 24)

If traction belt slips during operation, an adjustment is required. **Whenever the belt is replaced, an adjustment is required.**

1. Loosen upper jam nut securing traction cable to mounting bracket.

2. Rotate bottom jam nut upward to increase belt tension.

Note: When adjusting cable, always rotate nut one turn at a time.

3. Tighten upper jam nut against bracket.

4. Check tension of belt by operating machine. If belt still slips, repeat procedure.

IMPORTANT: Do not adjust the belt too tight because it may cause snowthrower to creep when traction lever is in disengaged position. If this occurs, readjust, loosening belt tension.

REPLACING DRIVE BELTS (Fig. 26)

If auger/impeller belt or traction belt become worn, glazed, stretched, oil-soaked, or otherwise defective, belt replacement is required.

1. Pull wire off spark plug and make sure it does not contact the plug accidentally.
2. Remove (3) flange head screws holding belt cover in place, and slide belt cover up cables.

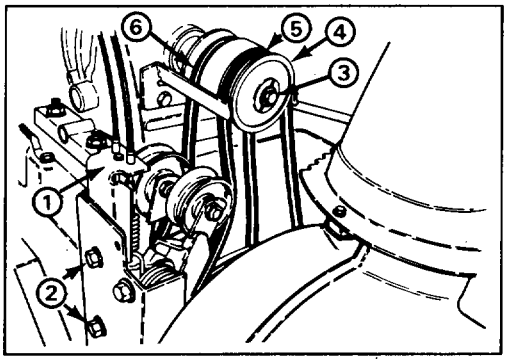

Figure 26

1. Idler pulley assembly
2. Flange head capscrews (2)
3. Capscrew & lockwasher
4. Half sheave
5. Auger/impeller belt
6. Traction belt

3. Move speed shift control to N (neutral).
4. Remove (2) flange head capscrews securing idler pulley assembly to engine frame. Remove idler pulley assembly.
5. Remove capscrew and lockwasher securing half sheave to front of pulley assembly.
6. Slide auger/impeller pulley and belt off crankshaft and remove belt from impeller pulley.
7. If replacing traction belt, slide traction pulley and belt off crankshaft and remove belt from transmission pulley.
8. On control cable which corresponds to belt being replaced, loosen jam nuts securing cable to bracket (Fig. 23). Cable must be free to slide in bracket when changing belt(s).
9. Reinstall belts by reversing procedure. Make sure tabs in half sheave are inserted into mounting grooves in auger/impeller pulley when reinstalling.

Note: Make sure idler pulleys are aligned with belts when reinstalling idler pulley assembly.

10. Readjust belts, refer to Adjusting Auger/Impeller Drive Belt or Adjusting Traction Drive Belt.

⚠ WARNING

Improper adjustment may cause injury if auger/impeller turns when disengaged.

ADJUSTING DRIVE CHAIN (Figs. 27-30)

The drive chain must be adjusted to maintain 1/8-3/8 of an inch deflection t mid span between transmission and axle sprocket. Check chain deflection after every 25 hours of operation.

1. Make sure wheels are positioned in rear position, **move shift control into 2nd gear**, and tip snowthrower up onto auger housing.

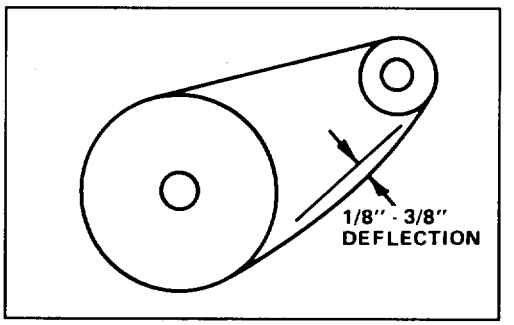

Figure 27

IMPORTANT: To adjust drive chain, the snowthrower must be tipped up on auger housing. However, before the snowthrower is tipped, drain all gasoline from fuel tank.

2. Check deflection of chain by lifting up on chain with moderate pressure at mid span. There should be 1/8-3/8" deflection. If deflection is not as specified an adjustment is required.

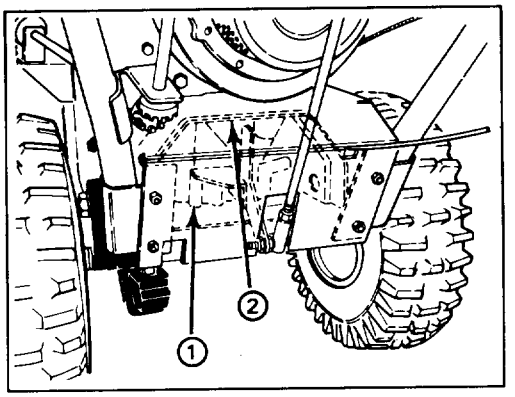

Figure 28

1. Transmission
2. Transmission frame

3. Loosen (4) flange head capscrews (2 each side) securing transmission frame to engine frame (Fig. 29).

4. Pivot rear of transmission frame until 1/8-3/8" chain deflection is attained, then, retighten flange head capscrews.

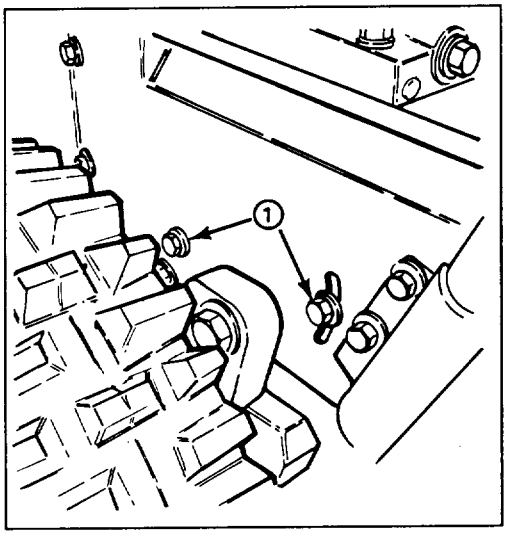

Figure 29

1. Flange head capscrews

IMPORTANT: Excessive chain tension may cause transmission damage.

Note: If gear shift lever is not aligned with Power Shift slot in control panel (Fig. 30, inset), shift rod length must be adjusted as follows:

A. Disconnect ball joint from transmission lever and loosen jam nut.
B. Rotate ball joint up or down until gear shift lever is aligned with Power Shift slot.
C. Reinstall ball joint to transmission lever and tighten jam nut.

5. Recheck chain deflection and lower snowthrower to normal position.

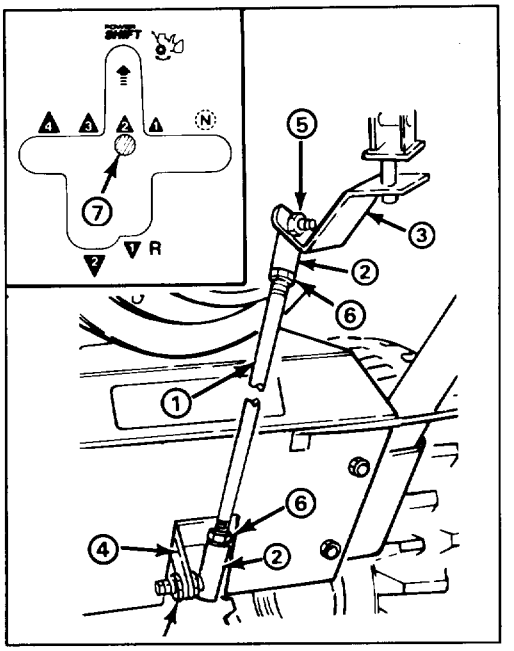

Figure 30

1. Shift rod
2. Ball joint
3. Shift bracket
4. Transmission lever
5. Locknut
6. Jam nut
7. Gear shift lever

ADJUSTING CARBURETOR (Fig. 31)

The carburetor has been adjusted at the factory, but an occasional adjustment may be required.

1. Needle Valve—Close needle valve finger-tight by gently rotating it clockwise.

IMPORTANT: Do not close needle valve too tight because valve and seat in carburetor will likely be damaged.

2. Rotate—open—needle valve 1-1/2 turns counterclockwise.

3. Idle Valve—Close idle valve finger-tight by gently rotating it clockwise.

IMPORTANT: Do not close idle valve too tight because valve and seat in carburetor will likely be damaged.

4. Rotate—open—idle valve 1/4 turn to 3/4 of a turn counterclockwise.

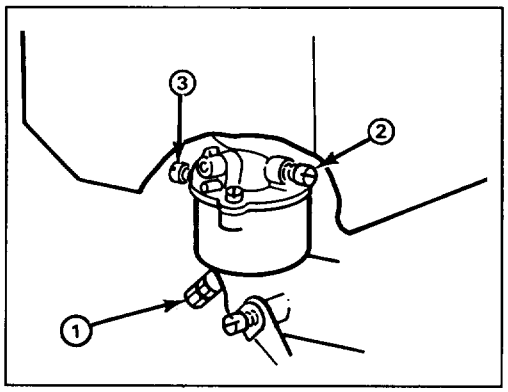

Figure 31

1. Needle valve
2. Idle valve
3. Idle speed adjusting screw

Note: The needle valve and idle valve settings are approximates; however, the settings will allow engine to be started so carburetor can be fine tuned—steps 5-11.

5. Start engine and let it warm up for approximately 2 to 3 minutes; then move throttle to FAST.

WARNING

Engine must be running so final adjustment of the carburetor can be performed. To guard against possible personal injury, move auger drive and wheel drive controls to DISENGAGE, and remember to keep hands, feet, face, and other part of the body away from muffler, auger, discharge chute, and any moving part(s).

6. Rotate needle valve clockwise—in—until engine misses because of a lean gasoline mixture. Then rotate needle valve counterclockwise—out— until engine runs unevenly because of a rich gasoline mixture. Next, rotate needle valve clockwise, back to the midpoint between the rich and lean setting, so engine runs smoothly.

7. Move throttle control backward to idle speed. Next, rotate idle speed adjusting screw until engine idles fast—1750 rpm.

8. Rotate idle valve clockwise—in—until engine begins to miss because of a lean mixture. Then rotate idle valve counterclockwise—out—until engine runs unevenly because of rich mixture. Next, rotate idle valve clockwise, back to the mid-point between rich and lean settings.

9. Again, rotate idle speed adjusting screw until engine idles at 1750 rpm.

10. Check carburetor adjustment by quickly moving throttle from idle speed to high speed. Engine should accelerate without hesitation or sputtering. If engine does not accelerate properly, adjust carburetor to a slightly richer mixture.

11. After carburetor is adjusted, shut engine off.

REPLACING SPARK PLUG

Use a Champion RCJ-8 or Autolite AR7N spark plug. Set air gap at 0.030" (0.76 mm). Since air gap between center and side electrodes of the spark plug increases gradually during normal engine operation, install a new plug after every 25 hours of engine operation.

1. Clean area around spark plug so foreign matter cannot fall into cylinder when plug is removed.

2. Pull wire off spark plug (Fig. 32) and remove plug from cylinder head.

IMPORTANT: A cracked, fouled, or dirty spark plug must be replaced. Do not sand blast, scrape, or clean electrodes because grit may eventually release from the plug and fall into the cylinder. The result will likely be engine damage.

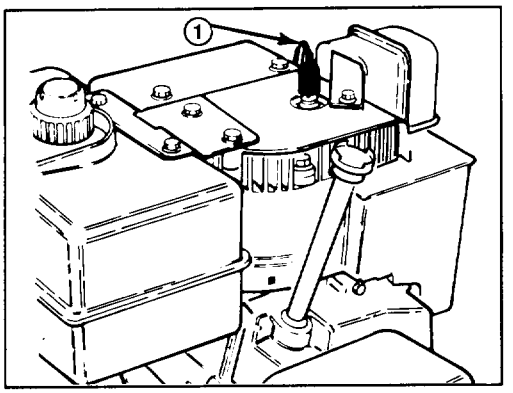

Figure 32

1. Spark plug wire

3. Set air gap between electrodes of new spark plug at 0.030" (0.76 mm) (Fig. 33). Next, install spark plug in cylinder head. Tighten plug to 15 ft-lb (20.4 N·m). If torque wrench is not used, tighten plug firmly.

4. Push the wire onto spark plug.

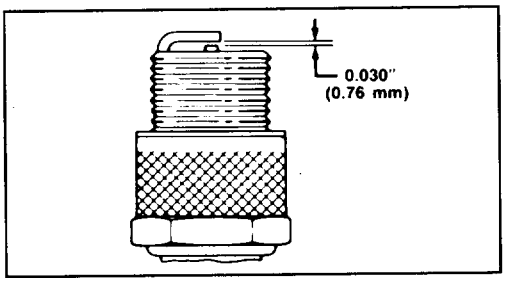

Figure 33

PREPARING SNOWTHROWER FOR STORAGE

1. Drain gasoline from fuel tank: refer to Draining Gasoline, page 15. Wipe up any gasoline that may have spilled.

2. Start the engine and let it run until it stops because there is no gasoline in the fuel system.

3. Remove spark plug from cylinder head. Next, pour two teaspoons of engine oil into spark plug hole in cylinder head. Install spark plug in cylinder head, but do not install wire on the plug. Then pull recoil starter slowly to distribute oil on inside of cylinder.

4. Lubricate the snowthrower: refer to Lubricating Snowthrower, page 15.

5. Change crankcase oil: see Changing Crankcase Oil, page 15.

6. Clean the snowthrower. Touch up chipped surfaces with paint. Toro Re-Kote paint is available from an Authorized TORO Service Dealer. Sand affected areas before painting, and use a rust preventative to prevent metal parts from rusting.

7. Tighten all screws and nuts. If any part is damaged, repair or replace it.

8. Store snowthrower in a clean, dry place, and cover it for protection.

9. The snowthrower may be stored in upright position. Be sure to drain gas and oil before tipping snowthrower upright on auger housing.

IDENTIFICATION AND ORDERING

MODEL AND SERIAL NUMBER

The snowthrower has two identification numbers: a model number and a serial number. The two numbers are stamped on a decal which is located on back of engine mounting plate. In any correspondence concerning the snowthrower, supply model and serial numbers to assure that correct information and replacement parts are obtained.

To order replacement parts from an Authorized TORO Service Dealer, supply the following information:

1. Model and serial numbers of the snowthrower.

2. Part number, description, and quantity of part(s) desired.

Note: Do not order by reference number if a parts catalog is being used; use the PART NUMBER.

TORO SERVICE SUPPORT

If help—concerning safety, set-up, operation, maintenance, or troubleshooting—is ever needed, contact the local Authorized TORO Service Dealer or Distributor. Refer to the "Yellow Pages" for assistance. In addition to skilled service technicians, the dealer and distributor have factory approved accessories and replacement parts. Keep your TORO all TORO. Buy genuine TORO replacement parts and accessories.

MAINTENANCE RECORD

Date	Hours Used	Oil Change	Lubrication	Summer Storage	Fall Service	Spark Plug Gap

UPL-49806

The Toro Promise

A Two Year Limited Warranty On All Gasoline Powered Consumer Products

The Toro Company promises to repair these TORO Products if defective in materials or workmanship. The following time periods from the date of purchase apply:

Residential Product ..... 2 Years
Residential Products Used Commercially ..... 45 Days

The cost of parts and labor are included, but the customer pays the transportation costs. Just return any residential product to an Authorized TORO Service Dealer or TORO Distributor.

Should you feel your TORO Product is defective and wish to rely on The Toro Promise, you may return it to:

1. Contact any Authorized TORO Service Dealer, TORO Master Service Dealer, or TORO Distributor. (The Yellow Pages of your telephone directory is a good reference source).
2. The dealer will either instruct you to return the product to the dealer or will recommend another Authorized TORO Service outlet which might be more convenient.
3. Bring the product along with your original sales slip, or other evidence of purchase date, to the service dealer.
4. The servicing dealer will inspect the unit, advise you whether the product is defective and, if so, make all repairs necessary to correct the defect without any extra charge to you.

If for any reason you are dissatisfied with the analysis of the defect or the service performed, you may contact us.

Write: TORO Customer Service Dept.
8111 Lyndale Avenue South
Minneapolis, MN 55420

The above remedy of product defects through repair by an Authorized TORO Service Dealer is the purchaser's sole remedy for any defect.

THERE IS NO OTHER EXPRESS WARRANTY. ALL IMPLIED WARRANTIES OF MERCHANTIBILITY AND FITNESS FOR USE ARE LIMITED TO THE DURATION OF THE EXPRESS WARRANTY.

Some states do not allow limitations on how long implied warranty lasts, so the above limitation may not apply to you.

This warranty applies only to parts or components which are defective and does not cover repairs necessary due to normal wear, misuse, accidents, or lack of proper maintenance. Regular, routine maintenance of the unit to keep it in proper operating condition is the responsibility of the owner.

All warranty repairs reimbursable under The Toro Promise must be performed by an Authorized Toro Service Dealer using Toro approved replacement parts.

Repairs or attempted repairs by anyone other than an Authorized TORO Service Dealer are not reimbursable under the TORO Promise. In addition, these unauthorized repair attempts may result in additional malfunctions, the correction of which is not covered by warranty.

THE TORO COMPANY IS NOT LIABLE FOR INDIRECT OR CONSEQUENTIAL DAMAGES IN CONNECTION WITH THE USE OF THE PRODUCT.

Some states do not allow the exclusion of incidental or consequential damages, so the above exclusion may not apply to you.

This warranty gives you specific legal rights, and you may also have other rights which vary from state to state.

COUNTRIES OTHER THAN THE UNITED STATES OR CANADA

Customers who have purchased TORO products exported from the United States or Canada should contact their TORO Distributor (Dealer) to obtain guarantee policies for your country, province, or state. If for any reason you are dissatisfied with your Distributor's service or have difficulty obtaining guarantee information, contact the TORO Importer. If all other remedies fail, you may contact us at The Toro Company.