Form No. 3383-271 Rev A

TORO®

Count on it.

Operator's Manual

52in Side Discharge Mower

Groundsmaster® 200, 3320 and 3280-D Series Traction Unit

Model No. 30555—Serial No. 314000001 and Up

Register at www.Toro.com.
Original Instructions (EN)

CE

3383-271 A

This product complies with all relevant European directives, for details please see the separate product specific Declaration of Conformity (DOC) sheet.

⚠ WARNING

CALIFORNIA
Proposition 65 Warning

This product contains a chemical or chemicals known to the State of California to cause cancer, birth defects, or reproductive harm.



Figure 1

1. Safety alert symbol

This manual uses 2 other words to highlight information. **Important** calls attention to special mechanical information and **Note** emphasizes general information worthy of special attention.

Introduction

This rotary-blade lawn cutting deck is mounted to a ride-on machine and is intended to be used by professional, hired operators in commercial applications. It is primarily designed for cutting grass on well-maintained lawns in parks, sports fields, and on commercial grounds. It is not designed for cutting brush, mowing grass and other growth alongside highways, or for agricultural uses.

Read this information carefully to learn how to operate and maintain your product properly and to avoid injury and product damage. You are responsible for operating the product properly and safely.

You may contact Toro directly at www.Toro.com for product and accessory information, help finding a dealer, or to register your product.

Whenever you need service, genuine Toro parts, or additional information, contact an Authorized Service Dealer or Toro Customer Service and have the model and serial numbers of your product ready. The model and serial numbers are stamped into a plate located on the carrier frame behind the right front castor wheel. Write the numbers in the space provided.

Model No. _____

Serial No. _____

This manual identifies potential hazards and has safety messages identified by the safety alert symbol (Figure 1), which signals a hazard that may cause serious injury or death if you do not follow the recommended precautions.

© 2013—The Toro® Company
8111 Lyndale Avenue South
Bloomington, MN 55420

Contact us at www.Toro.com.
Printed in the USA.
All Rights Reserved

Contents

Introduction 2
Safety 3
- Safe Operating Practices 3
- Toro Mower Safety 5
- Safety and Instructional Decals 6

Setup 8
- 1 Installing the Lift Arms 8
- 2 Installing the Carrier Frame 9
- 3 Installing the Cutting Unit 10
- 4 Installing the CE Decal 11
- 5 Installing Rear Weight 11

Product Overview 12
- Specifications 12
- Attachments/Accessories 12

Operation 12
- Adjusting the Height-of-Cut 12
- Adjusting the Rollers 12
- Checking the Gear Box Lubricant 13
- Adjusting Weight Transfer 13
- Using the Grass Deflector 13

Maintenance 14
- Lubrication 14
- Separating the Cutting Unit from the Traction Unit 15
- Servicing the Bushings in the Castor Arms 15
- Servicing the Castor Wheel and Bearing 15
- Checking for a Bent Blade 16
- Removing the Cutting Blade 16
- Inspecting and Sharpening the Blade 17
- Checking and Correcting Mismatch of Blades 18
- Replacing the Grass Deflector 19
- Adjusting the Idler Pulley 19
- Replacing the Drive Belt 19

Troubleshooting 21

Safety

This machine meets or exceeds CEN standard EN 836:1997, ISO standard 5395:1990, and ANSI B71.4-2004 specifications in effect at the time of production.

Improper use or maintenance by the operator or owner can result in injury. To reduce the potential for injury, comply with these safety instructions and always pay attention to the safety alert symbol, which means CAUTION, WARNING, or DANGER- "personal safety instruction." Failure to comply with the instruction may result in personal injury or death.

Safe Operating Practices

The following instructions are adapted from the CEN standard EN 836:1997, ISO standard 5395:1990, and ANSI B71.4-2012.

Training

- Read the operator's manual and other training material carefully. Be familiar with the controls, safety signs, and the proper use of the equipment. If the operator or mechanic can not read the language of this manual, it is the owner's responsibility to explain this material to them.
- Become familiar with the safe operation of the equipment, operator controls, and safety signs.
- All operators and mechanics should be trained. The owner is responsible for training the users
- Never let children or untrained people operate or service the equipment. Local regulations may restrict the age of the operator.
- The owner/user can prevent and is responsible for accidents or injuries occurring to himself or herself, other people, or property.

Safe Handling of Fuels

- To avoid personal injury or property damage, use extreme care in handling gasoline. Gasoline is extremely flammable and the vapors are explosive.
- Extinguish all cigarettes, cigars, pipes, and other sources of ignition.
- Use only an approved fuel container.
- Never remove fuel cap or add fuel with the engine running.
- Allow engine to cool before refueling.
- Never refuel the machine indoors.
- Never store the machine or fuel container where there is an open flame, spark, or pilot light such as on a water heater or on other appliances.
- Never fill containers inside a vehicle or on a truck or trailer bed with a plastic liner. Always place containers on the ground away from your vehicle before filling.

- Remove equipment from the truck or trailer and refuel it on the ground. If this is not possible, then refuel such equipment with a portable container, rather than from a fuel dispenser nozzle.
- Keep the nozzle in contact with the rim of the fuel tank or container opening at all times until fueling is complete. Do not use a nozzle lock open device.
- If fuel is spilled on clothing, change clothing immediately.
- Never overfill fuel tank. Replace fuel cap and tighten securely.

Preparation

- Evaluate the terrain to determine what accessories and attachments are needed to properly and safely perform the job. Only use accessories and attachments approved by the manufacturer.
- Wear appropriate clothing including hard hat, safety glasses and ear protection. Long hair, loose clothing or jewelry may get tangled in moving parts.
- Inspect the area where the equipment is to be used and remove all objects such as rocks, toys and wire which can be thrown by the machine.
- Check that operator's presence controls, safety switches and shields are attached and functioning properly. Do not operate unless they are functioning properly.

Operation

- Never run an engine in an enclosed area.
- Only operate in good light, keeping away from holes and hidden hazards.
- Be sure all drives are in neutral and parking brake is engaged before starting engine. Only start engine from the operator's position. Use seat belts if provided.
- Slow down and use extra care on hillsides. Be sure to travel in the recommended direction on hillsides. Turf conditions can affect the machine's stability. Use caution while operating near drop-offs.
- Slow down and use caution when making turns and when changing directions on slopes.
- Never raise deck with the blades running.
- Never operate with guards not securely in place. Be sure all interlocks are attached, adjusted properly, and functioning property.
- Do not change the engine governor setting or overspeed the engine.
- Stop on level ground, lower the cutting units, disengage drives, engage parking brake (if provided), shut off engine before leaving the operator's position for any reason.
- Stop equipment and inspect the blades after striking objects or if an abnormal vibration occurs. Make necessary repairs before resuming operations.
- Keep hands and feet away from the cutting units.
- Look behind and down before backing up to be sure of a clear path.
- Never carry passengers and keep pets and bystanders away.
- Slow down and use caution when making turns and crossing roads and sidewalks. Stop blades if not mowing.
- Do not operate the mower under the influence of alcohol or drugs.
- Lightning can cause severe injury or death. If lightning is seen or thunder is heard in the area, do not operate the machine; seek shelter.
- Use care when loading or unloading the machine into a trailer or truck.
- Use care when approaching blind corners, shrubs, trees, or other objects that may obscure vision.
- The operator shall turn on flashing warning lights, if provided, whenever traveling on a public road, except where such use is prohibited by law.

Maintenance and Storage

- Disengage drives, lower the cutting units, move traction pedal to Neutral, set parking brake, stop engine and remove key. Wait for all movement to stop before adjusting, cleaning or repairing.
- Clean grass and debris from cutting units, drives, muffler. Let engine cool before storing and do not store near flames, and engine to help prevent fires. Clean up oil or fuel spillage.
- Let engine cool before storing and do not store near flame.
- Shut off fuel while storing or transporting. Do not store fuel near flames or drain indoors.
- Park machine on level ground. Never allow untrained personnel to service machine.
- Use jack stands to support components when required.
- Carefully release pressure from components with stored energy.
- Disconnect battery before making any repairs. Disconnect the negative terminal first and the positive last. Reconnect positive first and negative last.
- Use care when checking blades. Wrap the blades or wear gloves, and use caution when servicing them. Only replace blades. Never straighten or weld them.
- Keep hands and feet away from moving parts. If possible, do not make adjustments with the engine running.
- Charge batteries in an open well ventilated area, away from spark and flames. Unplug charger before connecting or disconnecting from battery. Wear protective clothing and use insulated tools.
- Keep all parts in good working condition and all hardware tightened. Replace all worn or damaged decals.

Hauling

- Use care when loading or unloading the machine into a trailer or truck.
- Use full width ramps for loading machine into trailer or truck.
- Tie the machine down securely using straps, chains, cable, or ropes. Both front and rear straps should be directed down and outward from the machine

Toro Mower Safety

The following list contains safety information specific to Toro products or other safety information that you must know that is not included in the CEN, ISO, or ANSI standard.

This product is capable of amputating hands and feet and throwing objects. Always follow all safety instructions to avoid serious injury or death.

Use of this product for purposes other than its intended use could prove dangerous to user and bystanders.

- Know how to stop the engine quickly.
- Do not operate the machine while wearing tennis shoes or sneakers.
- Wearing safety shoes and long pants is advisable and required by some local ordinances and insurance regulations.
- Handle fuel carefully. Wipe up any spills.
- Check the safety interlock switches daily for proper operation. If a switch should fail, replace the switch before operating the machine.
- Using the machine demands attention. To prevent loss of control:
  - Do not drive close to sand traps, ditches, creeks, embankments, or other hazards.
  - Avoid sudden stops and starts.
  - When near or crossing roads, always yield the right-of-way.
  - Lower the cutting unit when going down slopes.
- The grass deflector must always be installed and in the lowest position on the side discharge cutting unit. Never operate the mower without the deflector or entire grass collector.
- If the cutting unit discharge area ever plugs, shut the engine off before removing the obstruction.
- Cut grass slopes carefully. Do not start, stop, or turn suddenly.
- Do not touch the engine or muffler while the engine is running or soon after it has stopped because these areas could be hot enough to cause burns.

Maintenance and Storage

- Check the blade mounting bolts frequently to be sure that they are tightened to specification.
- Make sure that all hydraulic line connectors are tight and all hydraulic hoses and lines are in good condition before applying pressure to the system.
- Keep your body and hands away from pin hole leaks or nozzles that eject hydraulic fluid under high pressure. Use paper or cardboard, not your hands, to search for leaks. Hydraulic fluid escaping under pressure can have sufficient force to penetrate the skin and cause serious injury.
- Before disconnecting or performing any work on the hydraulic system, all pressure in the system must be relieved by stopping the engine and lowering the cutting units to the ground.
- If the engine must be running to perform a maintenance adjustment, keep hands, feet, clothing, and any parts of the body away from the cutting units, attachments, and any moving parts. Keep everyone away.
- Do not overspeed the engine by changing governor settings. To ensure safety and accuracy, have an Authorized Toro Distributor check the maximum engine speed with a tachometer.
- The engine must be shut off before checking the oil or adding oil to the crankcase.
- Make sure that the mower fuel tank is empty if the machine is to be stored in excess of 30 days. Do not store the mower near any open flame or where gasoline fumes may be ignited by a spark.
- Perform only those maintenance instructions described in this manual. If major repairs are ever needed or if assistance is desired, contact an Authorized Toro Distributor.
- To make sure of optimum performance and continued safety certification of the machine, use only genuine Toro replacement parts and accessories. Replacement parts and accessories made by other manufacturers could be dangerous, and such use could void the product warranty.

Safety and Instructional Decals

Safety decals and instructions are easily visible to the operator and are located near any area of potential danger. Replace any decal that is damaged or lost.

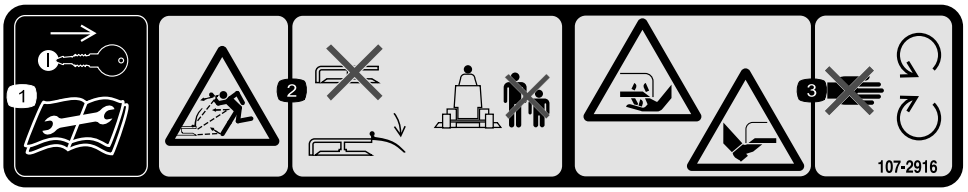

107-2916

1. Remove the ignition key and read the *Operator's Manual* before servicing or performing maintenance.
2. Thrown object hazard—do not operate the mower with the deflector up or removed, keep the deflector in place; keep bystanders a safe distance from the machine.
3. Cutting/dismemberment hazard of hand or foot, mower blade—stay away from moving parts.

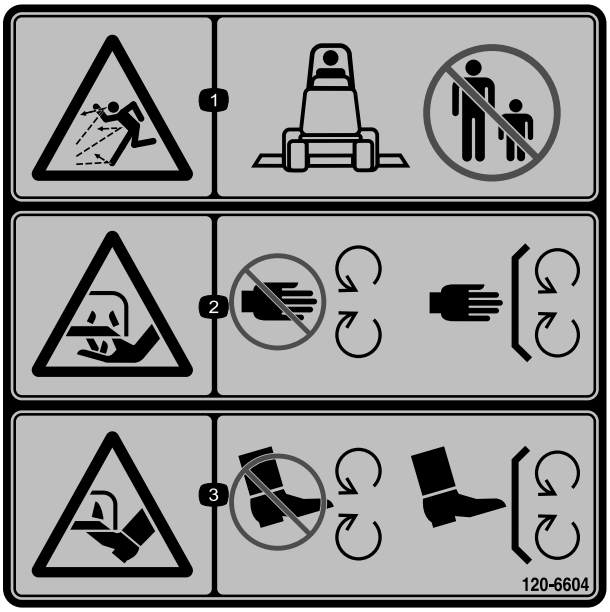

120-6604

1. Thrown object hazard—keep bystanders away from the machine.
2. Cutting/dismemberment hazard of hand, mower blade—stay away from moving parts, keep all guards and shields in place.
3. Cutting/dismemberment hazard of foot, mower blade—stay away from moving parts, keep all guards and shields in place.



93-6697

1. Read the *Operator's Manual*.
2. Add SAE 80w-90 (API GL-5) oil every 50 hours.

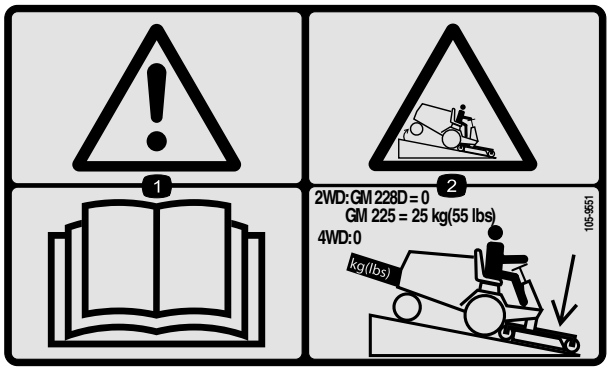

107-2908

1. Thrown object hazard—keep bystanders a safe distance from the machine.
2. Thrown object hazard—do not operate the mower with the deflector up or removed, keep the deflector in place.
3. Cutting/dismemberment hazard of hand or foot, mower blade—stay away from moving parts.

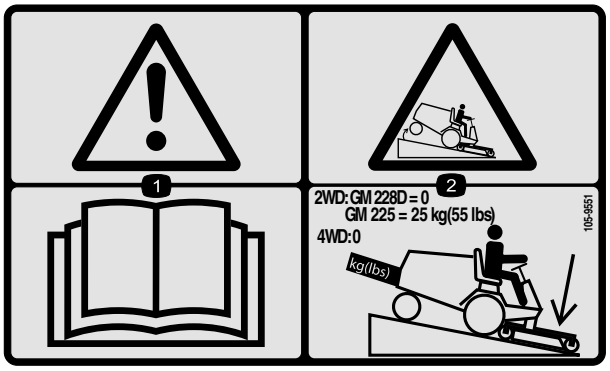

105–9551

1. Warning—read the *Operator's Manual.*
2. Lower the cutting deck when traveling down slopes. GM225 unites require 25 kg (55 lbs) of rear weight. GM228D and four-wheel drive units do not require rear weight.

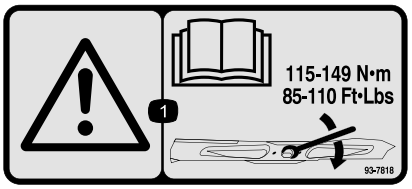

93-7818

1. Warning—read the *Operator's Manual* for instructions on torquing the blade bolt/nut to 115-149 N-m (85-110 ft-lb).

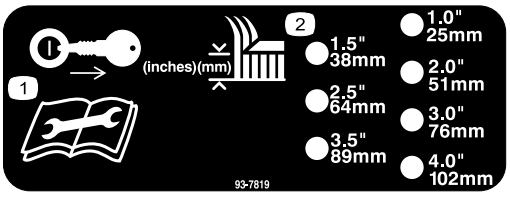

93–7819

1. Remove the ignition key and read the instructions before servicing or performing maintenance.
2. Height-of-cut

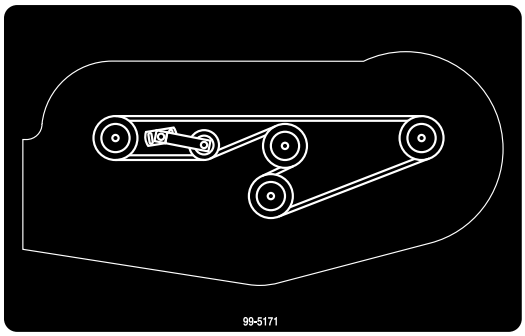

99-5171

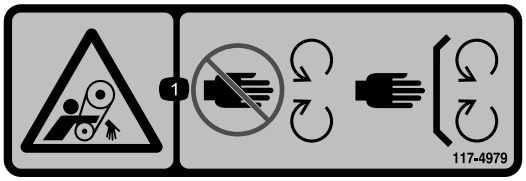

117–4979

1. Entanglement hazard, belt—stay away from moving parts, keep all guards and shields in place.



107-2915

1. Entanglement hazard, shaft-keep bystanders a safe distance from the machine.

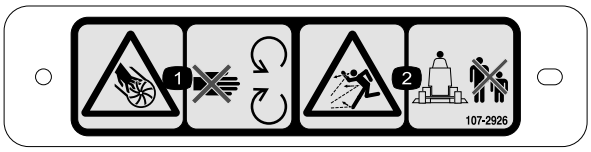

107-2926

1. Cutting/dismemberment hazard, impeller—stay away from moving parts.
2. Thrown object hazard—keep bystanders a safe distance from the machine.

Setup

Loose Parts

Use the chart below to verify that all parts have been shipped.

Procedure	Description	Qty.	Use
1	Right-hand lift arm Left-hand lift arm Spacer Pivot pin Cotter pin (5/32 x 1-3/4 inches)	1 1 4 2 2	Install the lift arms.
2	Rear cradle Spacer Bolt (3/8 x 2 inches) Flange nut (3/8 inch) Bolt (1/2 x 1-1/2 inches)	2 2 6 6 3	Install the carrier frame.
3	Clevis pins Hair pin cotter Cushion shim	4 4 3	Install the cutting unit.
4	Decal	1	Apply for CE compliance.
5	No parts required	–	Install rear weight.

Media and Additional Parts

Description	Qty.	Use
Parts Catalog Operator's Manual	1 1	Review the material and save in an appropriate place:

⚠ DANGER

If the engine is started and the PTO shaft is allowed to rotate, serious injury could result.

Do not start the engine and engage the PTO lever when the PTO shaft is not connected to the gear box on the cutting unit.

Note: Determine the left and right sides of the machine from the normal operating position.

Note: When installing the 52 inch deck onto a Groundsmaster 200 Series traction unit, the Weight Transfer Kit, Toro Part Number 70-8090 must be installed.

1

Installing the Lift Arms

Parts needed for this procedure:

1	Right-hand lift arm
1	Left-hand lift arm
4	Spacer
2	Pivot pin
2	Cotter pin (5/32 x 1-3/4 inches)

Procedure

1. On one side of the traction unit, loosen (do not remove) the wheel nuts securing the wheel and tire assembly to the front wheel studs.

2. Jack up the machine until the front wheel is off of the floor. Use jack stands or block the machine to prevent it from accidentally falling.
3. Remove the wheel nuts and slide the wheel and tire assembly off of the studs.
4. Mount a lift arm to the pivot bracket with 2 spacers, a pivot pin, and a cotter pin (5/32 x 1-3/4 inches). Mount the lift arm with the bend positioned outward (Figure 2).

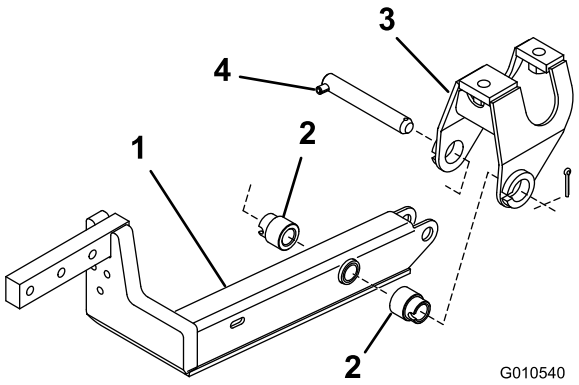

Figure 2

1. Lift arm
2. Spacer (2)
3. Pivot bracket
4. Pivot pin

5. Mount the rear of the lift arm to the lift cylinder with a pivot pin and 2 cotter pins (supplied with the traction unit) (Figure 3).

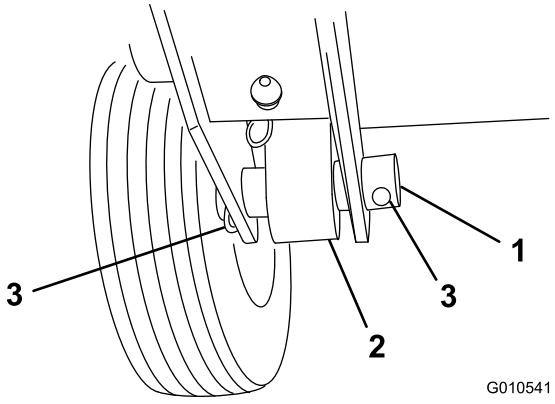

Figure 3

1. Cylinder pin
2. Cylinder end
3. Cotter pin

6. Remove the cotter pins from the clevis pins holding the brake struts and yokes together, and discard the cotter pins. Keeping the clevis pin in place, install the short end of the spring into the hole in the clevis pin to retain the parts together. Connect the other end of the springs to the slotted holes in the lift arms (Figure 4).

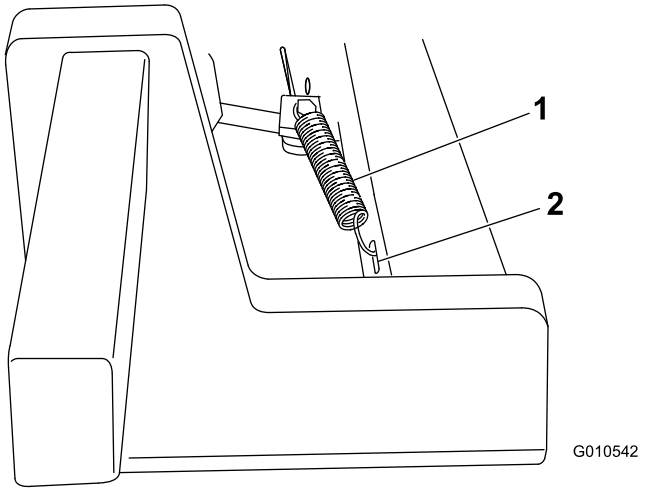

Figure 4

1. Brake return spring
2. Slotted hole

7. Repeat the procedure on the opposite side of the machine.

2

Installing the Carrier Frame

Parts needed for this procedure:

2	Rear cradle
2	Spacer
6	Bolt (3/8 x 2 inches)
6	Flange nut (3/8 inch)
3	Bolt (1/2 x 1-1/2 inches)

Procedure

Note: Grease the castor wheel shaft with No. 2 grease after installing and after initial operation of the machine.

1. Carrier frame is shipped upside down. Turn frame over before installation.
2. Remove the lynch pin and 2 thrust washers shipped on each castor wheel assembly. Leave 2 thrust washers on each shaft, insert the shafts into the frame mounting tube, and install the thrust washers and lynch pin (Figure 5).

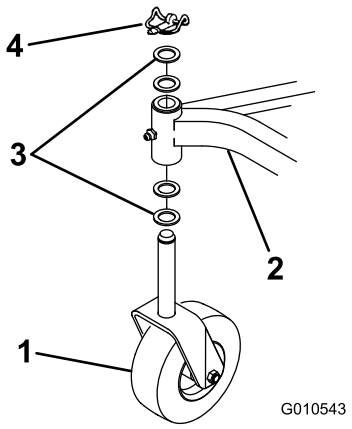

Figure 5

1. Castor wheel assembly
2. Carrier frame
3. Thrust washers
4. Lynch pin

3. Mount a rear cradle to each lift arm with 3 bolts (3/8 x 2 inches), spacers, and flange nuts as shown in Figure 6.

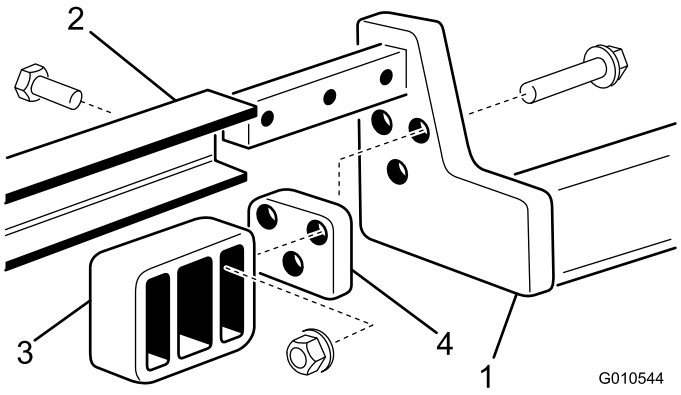

Figure 6

1. Lift arm
2. Carrier frame
3. Rear cradle
4. Spacer

Note: If the rear cradle mounting holes are not in the lift arms, use the dimensions shown in Figure 7 to locate, mark, and drill the 3 holes (10.31 mm (13/32 inch) diameter) required in each lift arm.

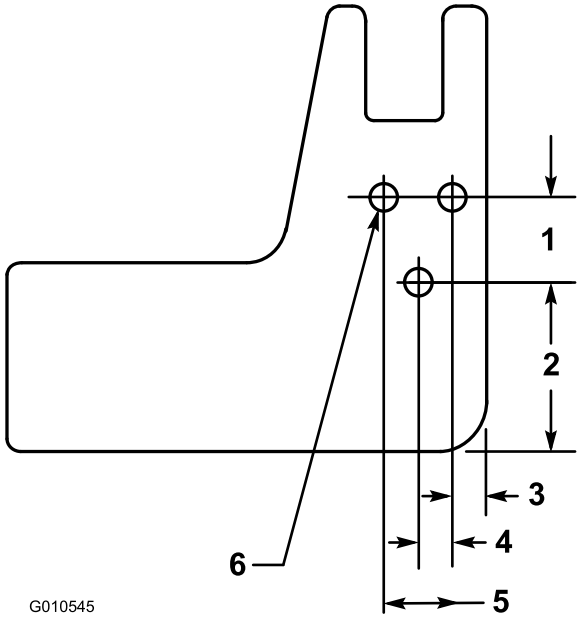

Figure 7

1. 31.75 mm (1.250 inches)
2. 62 mm (2.438 inches)
3. (12.7 mm (0.500 inch)
4. 12.7 mm (0.500 inch)
5. 25.4 mm (1.000 inch)
6. 10.31 mm (0.406 inch) diameter (3)

4. Slide the carrier frame onto the lift arms aligning the mounting holes. Secure each side of the carrier frame to the lift arms with 3 bolts (1/2 x 1-1/2 inches). Torque the bolts to 95-108 N-m (70-80 ft-lb) (Figure 6).

3

Installing the Cutting Unit

Parts needed for this procedure:

4	Clevis pins
4	Hair pin cotter
3	Cushion shim

Procedure

1. Make sure that the PTO shaft on the traction unit clears the cutting unit frame, engage the parking brake, put the traction pedal in neutral, the PTO lever in the Off position, start the engine, and raise the frame.
2. Stop engine and slide the cutting unit under the frame.
3. Remove the 2 bolts and lock washers securing the PTO guard mounting brackets to the gear box (Figure 8). Retain the fasteners for future installation.

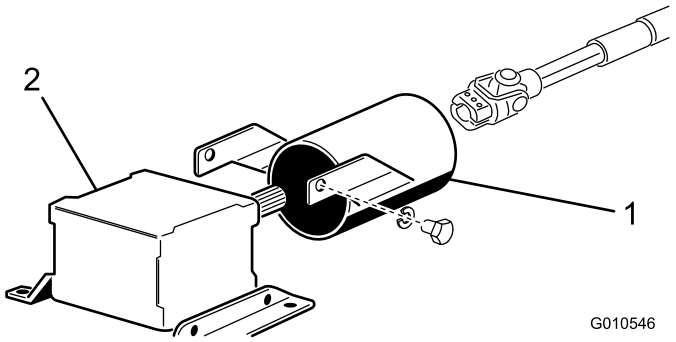

Figure 8

1. PTO guard
2. Gear box

4. Slide the PTO shaft guard onto the PTO shaft, positioning the guard as shown in Figure 8.
5. Slide the male PTO shaft into the female PTO shaft. Align the gear case input shaft with the PTO shaft and slide them together. Secure them with the roll pin and tighten the bolts and locknuts.
6. Attach the PTO shaft guard to the gear box with the 2 bolts and lock washers previously removed.
7. Lower the carrier frame and install 4 clevis pins through the desired height-of-cut bracket holes and frame brackets. Secure all 4 pins with hairpin cotters (Figure 9).

   Note: On the GM 3280-D and 3320 the engine must be started to lower the carrier frame.

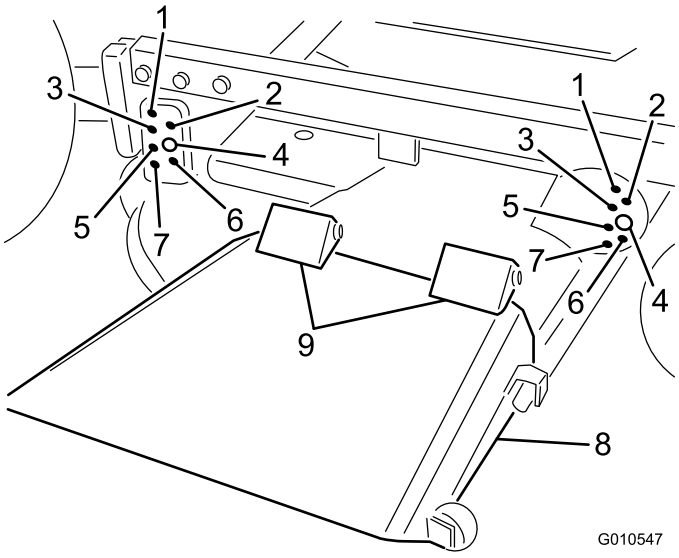

Figure 9

1. 25 mm (1 inch)
2. 38 mm (1-1/2 inches)
3. 51 mm (2 inches)
4. 64 mm (2-1/2 inches)
5. 76 mm (3 inches)
6. 89 mm (3-1/2 inches)
7. 102 mm (4 inches)
8. Grass deflector
9. Spring hinges

8. Check to make sure that the front height-of-cut pins are resting properly on the frame cushions (Figure 10). If the pins are not resting properly, place a shim or shims under the cushion to raise it for proper alignment.

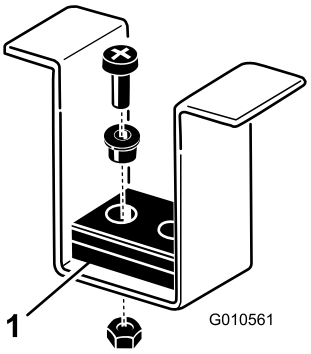

Figure 10

1. Frame cushions

4

Installing the CE Decal

Parts needed for this procedure:

1	Decal

Procedure

Apply the deal to the cutting unit for CE compliance

5

Installing Rear Weight

No Parts Required

Procedure

Two Wheel Drive Groundsmaster 200 Series, 3280-D, and 3320 traction units comply with the ANSI B71.4-2004 Standard when equipped with rear weight. Refer to the chart in the traction unit *Operator's Manual* to determine the combinations of weight required. Order the parts from your local Authorized Toro Distributor.

Four Wheel Drive Groundsmaster 200 Series and 3280-D traction units do not need additional rear weight to comply with the ANSI B71.4-2004 Standard.

Product Overview

Specifications

Note: Specifications and design are subject to change without notice.

Width of Cut	1.314 m (51-3/4 inches)
Height of Cut	Adjustable from 25 to 102 mm (1 to 4 inches) in 1/2 inch (13 mm) increments
Blade Tip Speed	15,525 ft/minute @ 3250 engine RPM
Cutting Blades	3 heat-treated steel blades, each 4.8 mm (3/16 inch) thick and 457 mm (18 inches) long
Pneumatic Wheels	203 mm (8 inches) diameter greaseable roller bearings (inflated to 138-207 kPa [20-30 psi])
Drive System	PTO driven gear box transmits power through a "AA" section belt to all blade spindles.
Net Weight	153 kg (338 lbs.)

Attachments/Accessories

A selection of Toro approved attachments and accessories is available for use with the machine to enhance and expand its capabilities. Contact your Authorized Service Dealer or Distributor or go to www.Toro.com for a list of all approved attachments and accessories.

Operation

Note: Determine the left and right sides of the machine from the normal operating position.

Adjusting the Height-of-Cut

The height-of-cut is adjustable from 25 to 102 mm (1 to 4 inches) in 13 mm (1/2 inch) increments by relocating 4 clevis pins in different hole locations (Figure 11).

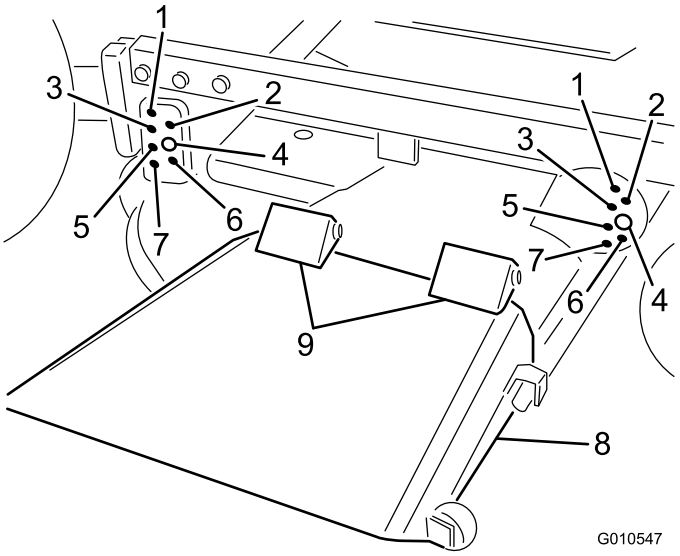

Figure 11

1. 25 mm (1 inch)
2. 38 mm (1-1/2 inches)
3. 51 mm (2 inches)
4. 64 mm (2-1/2 inches)
5. 76 mm (3 inches)
6. 89 mm (3-1/2 inches)
7. 102 mm (4 inches)
8. Grass deflector
9. Spring hinges

Adjusting the Rollers

Note: If the cutting unit is to be used in the 25 mm (1 inch) or 38 mm (1-1/2 inches) height-of-cut setting, the rear cutting unit rollers must be repositioned in the top bracket holes.

1. Remove the cotter pins securing the roller shafts to the underside of the deck.
2. Slide the shafts out of the lower bracket holes, align the rollers with the top holes, and install the shafts.
3. Install the cotter pins to secure the assemblies.

Checking the Gear Box Lubricant

The gear box is designed to operate on SAE 80-90 wt. gear lube. Although the gear box is shipped with lubricant from the factory, check the level before operating the cutting unit.

1. Position the machine and cutting unit on a level surface.
2. Remove the dipstick/fill plug from the top of the gear box (Figure 12) and make sure that the lubricant is between the marks on the dipstick. If the lubricant level is low, add enough lubricant until the level is between the marks.

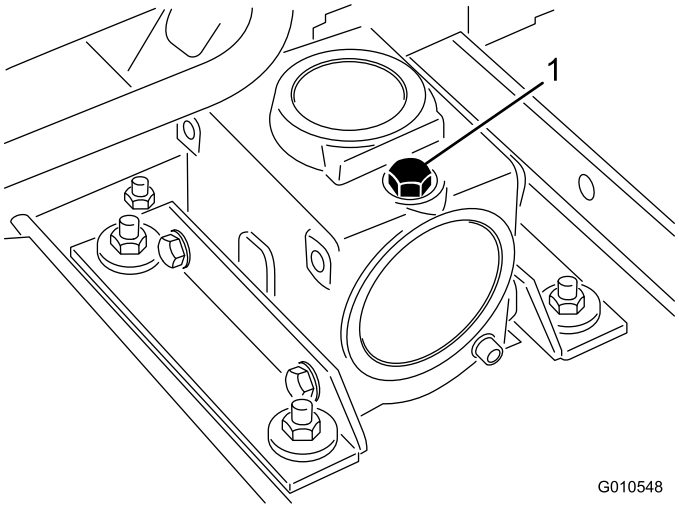

Figure 12

1. Dipstick/fill plug

Adjusting Weight Transfer

On Groundsmaster 3280-D and 3320 models only, refer to the traction unit *Operator's Manual* for the procedure to adjust the counterbalance pressure for best performance.

Using the Grass Deflector

⚠ DANGER

Without the grass deflector mounted in place, you and others are exposed to blade contact and thrown debris. Contact with the rotating mower blade(s) and thrown debris will cause injury or death

- **Never remove the grass deflector from the mower because the grass deflector routes material down toward the turf. If the grass deflector is ever damaged, replace it immediately.**
- **Never put your hands or feet under the mower.**
- **Never operate the mower with the deflector removed from the cutting unit or tied/blocked in a raised position.**

Note: The deflector is spring loaded into its downward normal operating position (Figure 11), but the operator can temporarily swing it out of the way to facilitate loading in a trailer or when otherwise necessary.

Maintenance

Important: The fasteners on the covers of this machine are designed to remain on the cover after removal. Loosen all of the fasteners on each cover a few turns so that the cover is loose but still attached, then go back and loosen them until the cover comes free. This will prevent you from accidentally stripping the bolts free of the retainers.

Lubrication

The cutting unit must be lubricated regularly. If the machine is operated under normal conditions, lubricate the castor bearings and bushings with No. 2 general purpose lithium base grease or molybdenum base grease after every 8 hours of operation or daily, whichever comes first. All other bearings, bushings, and the gear box must be lubricated after every 50 hours of operation.

1. Lubricate the following areas:
   - castor spindle bushings (Figure 13)
   - castor wheel bearings (Figure 13)

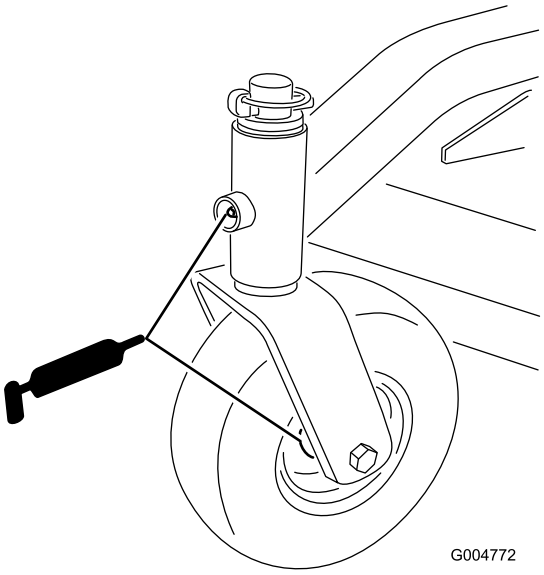

Figure 13

   - right and left lift arm pivot pins (Figure 14)

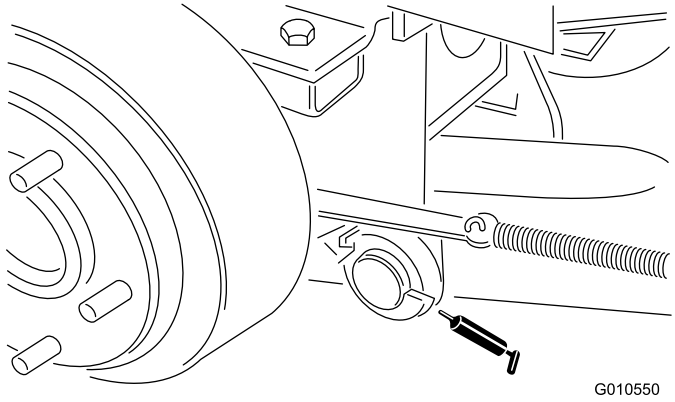

Figure 14

   - blade spindle bearings (Figure 15)

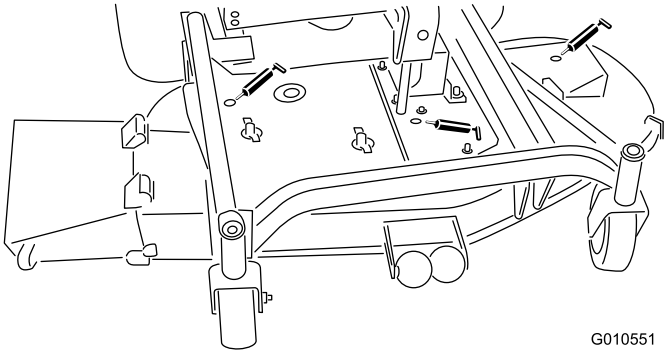

Figure 15

2. Position the machine and cutting unit on a level surface and lower the cutting unit. Remove the dipstick/fill plug from the top of the gear box (Figure 16) and make sure that the lubricant is between the marks on the dipstick. If the lubricant level is low, add SAE 80-90 wt. gear lube until the level is between the marks. SAE 80-90 wt. synthetic gear lube may be used as an alternative.

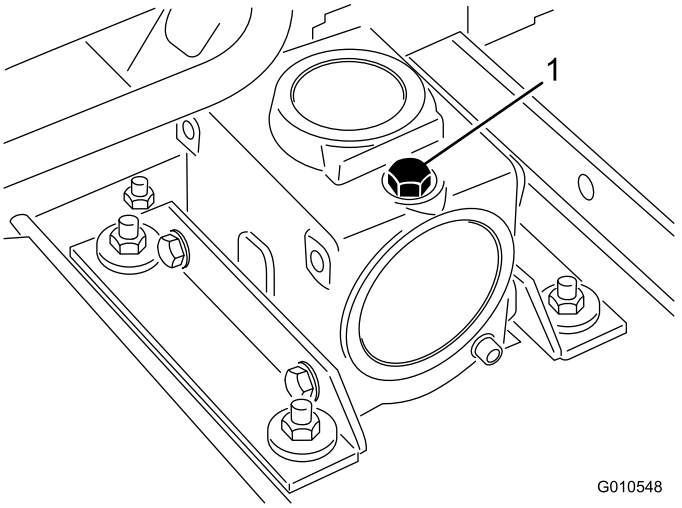

Figure 16

Separating the Cutting Unit from the Traction Unit

1. Position the machine on a level surface, raise the cutting unit, engage the parking brake, put the traction pedal in neutral, the PTO lever in the Off position, shut the engine off, and remove the ignition key.
2. Lower the cutting unit and remove the 4 pins from the height-of-cut brackets
3. Start the engine and raise the cutting unit frame.
4. Stop the engine and slide the cutting unit away from the traction unit and carrier frame, separating the male and female sections of the PTO shaft (Figure 17).

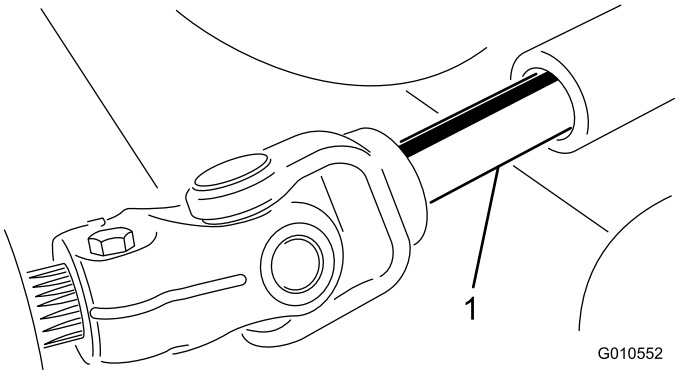

Figure 17

1. PTO shaft

⚠ DANGER

If the engine is started and the PTO shaft is allowed to rotate, serious injury could result.

Do not start the engine and engage the PTO lever when the PTO shaft is not connected to the gear box on the cutting unit.

5. The deck carrier frame must be removed if the traction unit will be used with any other accessory.

Servicing the Bushings in the Castor Arms

The castor arms have bushings pressed into the top and bottom portion of the tube which, after many hours of operation, will wear. To check the bushings, move the castor fork back and forth and from side to side. If the castor shaft is loose inside the bushings, the bushings are worn and must be replaced.

1. Raise the cutting unit so that the wheels are off of the floor and block it so that it cannot accidentally fall.
2. Remove the lynch pin and thrust washers from the top of the castor spindle.
3. Pull the castor spindle out of the mounting tube. Allow the thrust washers to remain on the bottom of the spindle.
4. Insert a pin punch into the top or bottom of the mounting tube and drive the bushing out of the tube (Figure 18). Also drive the other bushing out of the tube. Clean the inside of the mounting tube to remove any dirt.

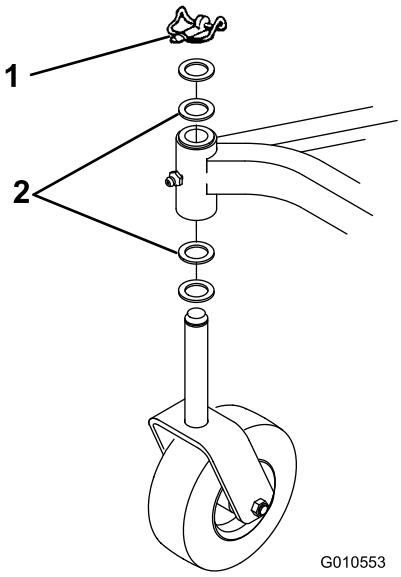

Figure 18

1. Lynch pin
2. Thrust washers

5. Apply grease to the inside and outside of the new bushings. Using a hammer and flat plate, drive the bushings into the mounting tube.
6. Inspect the castor shaft for wear and replace it if it is damaged.
7. Push the castor shaft through the bushings and mounting tube. Slide the spacers onto the shaft and secure it with the lynch pin.

Important: When the bushings are installed, the inside diameter may collapse slightly, and this may not allow the castor shaft to be installed. If the castor spindle does not slide through the new bushings and mounting tube, ream both bushings to an inside diameter of 1.126 inches.

Servicing the Castor Wheel and Bearing

The castor wheel rotates on a high-quality roller bearing and is supported by a spanner bushing. Even after many hours of use, provided that the bearing was kept well lubricated, bearing wear will be minimal. However, failure to keep the bearing lubricated will cause rapid wear. A wobbly castor wheel usually indicates a worn bearing.

1. Remove the locknut from the bolt holding the castor wheel assembly between the castor fork (Figure 19). Grasp the castor wheel and slide the bolt out of the fork.

   Note: Account for 2 thrust washers.

2. Tip the wheel to the side and allow the spanner bushing (Figure 19) to fall out.

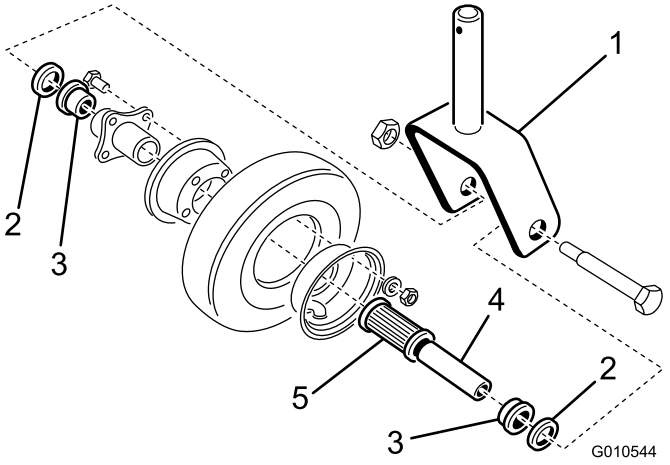

Figure 19

1. Castor fork
2. Thrust washer
3. Bearing retainer
4. Spanner bushing
5. Roller bearing

3. Remove one bearing retainer from the wheel hub and allow the bearing to fall out. Remove the bearing retainer from the opposite side of the wheel hub (Figure 19).
4. Inspect the bearing, spanner bushing, and wheel for wear. Replace worn or damaged parts.
5. To assemble the parts, slide the spanner bushing through the hub assembly.
6. Mount the castor wheel assembly and washers between the fork and insert the bolt and locknut. Tighten the bolt and locknut until the spanner bushing and washers bottom out against the inside of the castor fork.
7. Pump grease through the grease fitting on the wheel until the bearing is greased thoroughly.

Checking for a Bent Blade

1. Position the machine on a level surface, raise the cutting unit, engage the parking brake, put the traction pedal in neutral, the PTO lever in the Off position, shut the engine off, remove the ignition key, and disconnect the wires from the spark plugs. Block the cutting unit to prevent it from accidentally falling.
2. Rotate the blade until the ends face forward and backward. Measure from the inside of the cutting unit to the cutting edge at the front of the blade (Figure 20), and remember this dimension.



Figure 20

3. Rotate the opposite end of the blade forward. Measure between the cutting unit and cutting edge of the blade at the same position as in step 2 The difference between the dimensions obtained in steps 2 and 3 must not exceed 3 mm (1/8 inch). If the dimension exceeds 3 mm (1/8 inch), replace the blade because it is bent; refer to Removing the Cutting Blade.

Removing the Cutting Blade

The blade must be replaced if a solid object is hit, the blade is out-of-balance, worn, or bent. Always use genuine Toro replacement blades to ensure safety and optimum performance. Never use blades made by other manufacturers because they could be dangerous.

⚠ DANGER

A worn or damaged blade can break, and a piece of the blade could be thrown into the operator's or bystander's area, resulting in serious personal injury or death.

- **Inspect the blade periodically for wear or damage.**
- **Do not try to straighten a blade that is bent.**
- **Never weld a broken or cracked blade.**
- **Replace a worn or damaged blade with a new Toro blade to ensure continued safety certification of the product.**

1. Position the machine on a level surface, raise the cutting unit, engage the parking brake, put the traction pedal in neutral, the PTO lever in the Off position, shut the engine off, and remove the ignition key. Block the cutting unit to prevent it from accidentally falling.
2. Grasp the end of the blade using a rag or thickly padded glove. Remove the blade bolt, anti-scalp cup, and blade from the spindle shaft (Figure 21).

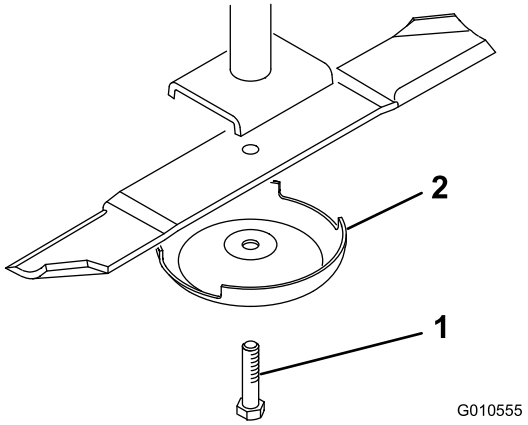

Figure 21

1. Blade bolt
2. Anti-scalp cup

3. Install the blade-sail facing toward the cutting unit-with the anti-scalp cup and blade bolt. Tighten the blade bolt to 85-110 ft-lb (115-149 N-m).

Inspecting and Sharpening the Blade

Two areas must be considered when checking and servicing the cutting blade: the sail and the cutting edge. Both cutting edges and the sail, which is the turned up portion opposite the cutting edge, contribute to a good quality-of-cut. The sail is important because it pulls grass up straight, thereby producing an even cut. However, the sail will gradually wear down during operation, and this condition is normal. As the sail wears down, the quality-of-cut will degrade somewhat, although the cutting edges are sharp. The cutting edge of the blade must be sharp so that the grass is cut rather than torn. A dull cutting edge is evident when the tips of the grass appear brown and shredded. Sharpen the cutting edges to correct this condition.

1. Position the machine on a level surface, raise the cutting unit, engage the parking brake, put the traction pedal in neutral, the PTO lever in the Off position, shut the engine off, and remove the ignition key. Block the cutting unit to prevent it from accidentally falling.
2. Examine the cutting ends of the blade carefully, especially where the flat and curved parts of the blade meet (Figure 22). Since sand and abrasive material can wear away the metal that connects the flat and curved parts of the blade, check the blade before using the machine. If wear is noticed (Figure 22), replace the blade; refer to Removing the Cutting Blade.

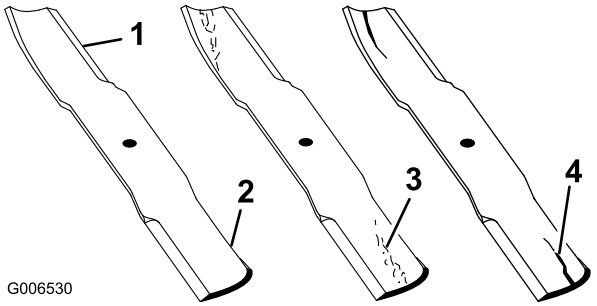

Figure 22

1. Cutting edge
2. Curved area/sail
3. Wear/slot forming
4. Crack

⚠ WARNING

If the blade is allowed to wear, a slot will form between the sail and flat part of the blade (Figure 22). Eventually, a piece of the blade may break off and be thrown from under the housing, possibly resulting in serious injury to yourself or bystanders.

- **Inspect the blade periodically for wear or damage.**
- **Replace a worn or damaged blade with a new Toro blade to ensure continued safety certification of the product.**

3. Examine the cutting edges of all blades. Sharpen the cutting edges if they are dull or nicked. Sharpen only the top side of the cutting edge and maintain the original cutting angle to ensure sharpness (Figure 23). The blade will remain balanced if the same amount of metal is removed from both cutting edges.

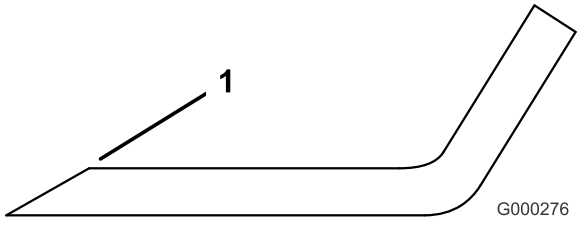

Figure 23

1. Sharpen at original angle

Note: Remove the blades and sharpen them on a grinder; refer to Removing the Cutting Blades. After sharpening the cutting edges, install the blade with the anti-scalp cup and blade bolt. The blade sails must be on top of the blade. Tighten the blade bolt to 115-149 N-m (85-110 ft-lb).

Checking and Correcting Mismatch of Blades

If one cutting blade cuts lower than the others, correct them as follows:

1. Lower the cutting unit onto a level surface, engage the parking brake, put the traction pedal in neutral, the PTO lever in the Off position, shut the engine off, and remove the ignition key. Make sure that the tire pressure is equal on all tires.
2. Raise the height-of-cut to the 102 mm (4 inches) position; refer to Adjusting the Height-of-Cut.
3. Rotate the blades so that the tips line up with one another. The tips of the adjacent blades must be within 3 mm (1/8 inch) of each other. If the tips are not within 3 mm (1/8 inch) of each other, proceed to step 10 and add shims between the spindle housing and bottom of the cutting unit.
4. Check to make sure that the front height-of-cut pins are resting properly on the frame cushions. If the pins are not resting properly, place a shim or shims under the cushion to raise it for proper alignment.
5. Position all 3 blades in the A position (Figure 24) and measure from the level surface to the bottom of the tip end of each blade (Figure 25).

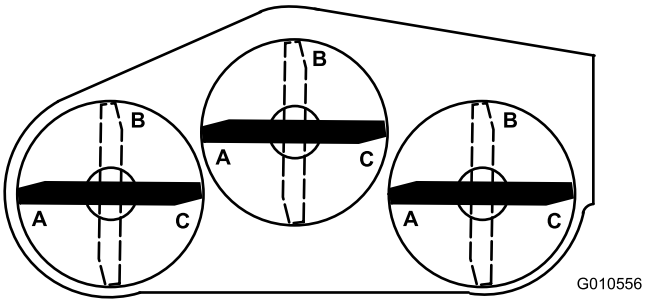

Figure 24

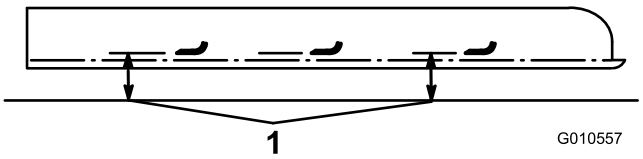

Figure 25

1. Measure from blade tip to a level surface.

6. Note the measurement attained at A, rotate the blades to the B position (Figure 24), measure the distance of all of the blades to the level surface, and note the dimensions (Figure 25).
7. Rotate the blades to the C position, measure, and note the distance measured (Figure 24 and Figure 25).
8. Compare the measurements at various positions. All dimensions must be equal within 6 mm (1/4 inch) from any 2 adjacent blades. The difference between the dimensions of all 3 blades must not exceed 10 mm (3/8 inch). If the difference exceeds specifications, proceed to step 9.
9. Remove the bolts, flat washers, and locknuts from the outer spindle in the area where the shims must be added. To raise or lower the blade, add a shim, Part No. 3256-24, between the spindle housing and bottom of the cutting unit. Continue checking the alignment of the blades and adding shims until the tips of the blades are within the required dimension.
10. Equalize the side-to-side measurements as follows:
    A. Cutting units usually operated at 25 to 51 mm (1 to 2 inches) height-of-cut should have the low side of the cutting unit raised. Remove the lynch pin securing the castor wheel on the low end (Figure 26) and remove the castor assembly.

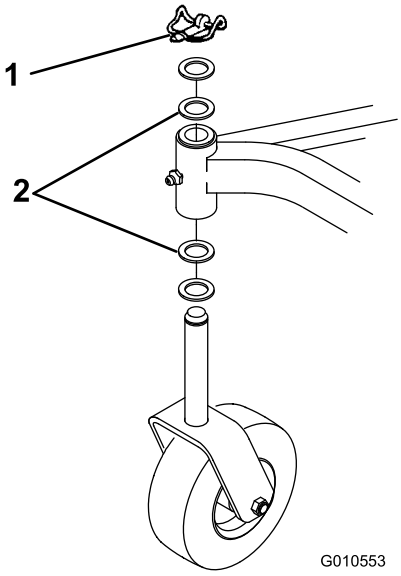

Figure 26

1. Lynch pin
2. Thrust washers (as required)

    B. Transfer one thrust washer from the top side of the castor shaft to the lower side, install the castor assembly, and compare the blade height of all blades; refer to steps 3 through 7. Continue adding thrust washers if the height still does not meet the requirements.
    C. If the cutting unit is operated at the 51 mm to 102 mm (2 to 4 inches) height-of-cut, lower the high side of the cutting unit. Remove the lynch pin of the castor at the high end of the unit and remove the castor assembly (Figure 26).
    D. Transfer one thrust washer from the lower side of the castor shaft to the top side, install the assembly, and compare the blade height of all of the blades; refer to steps 3 through 7. Repeat the procedure if the height still does not meet the requirements.

E. If the height is within the specified dimension, install the lynch pin, set the height-of-cut to the proper height, and resume operation.

Replacing the Grass Deflector

1. Position the machine on a level surface, raise the cutting unit, engage the parking brake, put the traction pedal in neutral, the PTO lever in the Off position, shut the engine off, and remove the ignition key. Block the cutting unit to prevent it from accidentally falling.
2. Remove the 2 bolts, locknuts, and springs securing the deflector mounts to the pivot brackets (Figure 27).
3. To remove the pivot brackets, remove the carriage bolts and nuts (Figure 27).
4. Install the pivot brackets on top of the discharge opening with the carriage bolts and nuts. The head of the carriage bolts must be on the inside of the cutting unit.

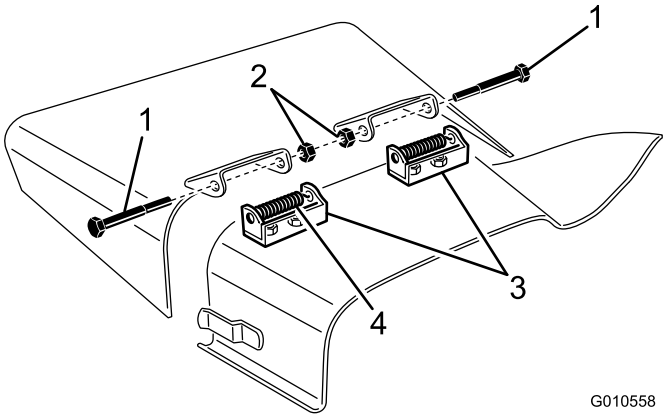

Figure 27

1. Bolt
2. Locknuts
3. Pivot brackets
4. Spring

5. Position the deflector mounts on the pivot brackets and secure the parts together with the bolts, locknuts, and springs. Both locknuts must face each other. Tighten the locknuts until they are flush against the deflector pivots.
6. Lift the deflector and allow it to drop to check the spring tension. The deflector must be held firmly in the full downward position by the spring tension. Correct it if necessary.

Adjusting the Idler Pulley

The idler pulley applies force against the belt so that power can be transmitted to the blade pulleys. If the idler is not tensioned against the belt with sufficient force, maximum power will not be transmitted to the pulleys. Initial tension on a new belt requires 34 to 41 N-m (25 to 30 ft-lb) of torque on the large nut, which applies force against the belt. As the belt wears and loosens, 27 to 34 N-m (20 to 25 ft-lb) of torque on the large nut is required. If the idler is not adjusted to these specifications, an adjustment is necessary.

1. Position the machine on a level surface, lower the cutting unit, engage the parking brake, put the traction pedal in neutral, the PTO lever in the Off position, shut the engine off, and remove the ignition key.
2. Release the latch and loosen the bolt securing the center cover.
3. Remove the center cover from the top of the cutting unit.
4. Loosen the 2 nuts securing the idler plate in place. Using a socket and torque wrench, tighten the idler adjusting nut to 24-41 N-m (25-30 ft-lb) (Figure 28).

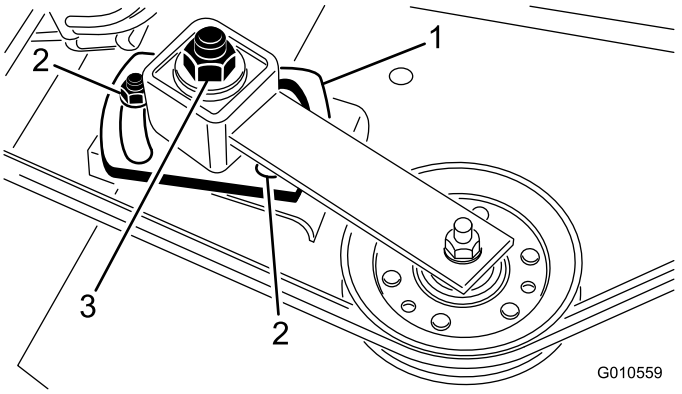

Figure 28

1. Idler plate
2. Nuts (2)
3. Idler adjustment

5. Hold the torque against the belt and tighten the 2 nuts so that the idler plate is held securely in place. Release the idler adjusting nut.
6. Install the cover to the top of the cutting unit.
7. Engage the latch and tighten the bolt to the secure the cover.

Replacing the Drive Belt

The blade drive belt, tensioned by the adjustable idler, is very durable. However, after many hours of use, the belt will show signs of wear. Signs of a worn belt are: squealing when belt is rotating, blades slipping when cutting grass, frayed edges, burn marks, and cracks. Replace the belt if any of these conditions are evident.

1. Position the machine on a level surface, lower the cutting unit, engage the parking brake, put the traction pedal in neutral, the PTO lever in the Off position, shut the engine off, and remove the ignition key.
2. Release the latches and loosen the bolts securing the covers.
3. Remove the covers from the top of the cutting unit.
4. Loosen the 2 nuts securing the idler plate in place and remove the old belt from the pulleys.

5. To install a new belt, the gear box base must be removed. To do this, remove the 4 carriage bolts and locknuts holding the gear box base.
6. Install the new belt around the gear box pulley, spindle pulleys, stationary idler pulley, and adjustable idler pulley (Figure 29).

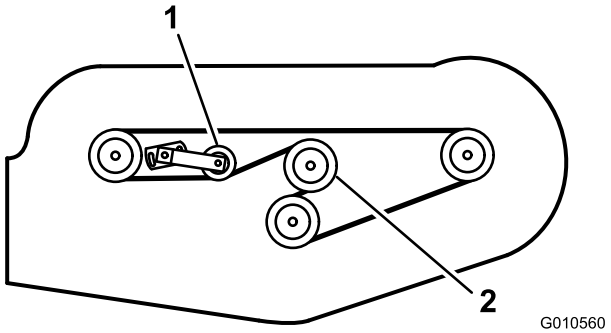

Figure 29

1. Adjustable idler pulley 2. Gear box pulley

7. Install the gear box base with the carriage bolts and locknuts.
8. Using a torque wrench, adjust the tension of the idler pulley against the belt; refer to Adjusting the Idler Pulley.
9. Install the covers to the top of the cutting unit.
10. Engage the cover latches and tighten the bolts to secure the covers.

Troubleshooting

Problem	Possible Cause	Corrective Action
The cutting unit will not cut or cuts poorly.	1. The blades are dull.	1. Sharpen the blades.
	2. One or more blades are bent or damaged.	2. Replace the blades.
	3. The spindle bolts are loose.	3. Torque the spindle bolts to 85 to 110 ft-lb (115 to 149 N-m).
	4. The cutting unit belts are loose or broken.	4. Tighten or replace the belts as necessary.
	5. The gear box pulley is loose.	5. Tighten or replace the pulley.
	6. A gear box shaft is broken.	6. Replace any broken shafts.
	7. The PTO belt is broken.	7. Replace the PTO belt.
	8. The PTO pulley is loose or broken.	8. Tighten or replace the pulley.
	9. The PTO shaft is broken.	9. Replace the PTO shaft.
	10. The pulley on the engine output shaft is loose or broken.	10. Tighten or replace the pulley.

Notes:

Declaration of Incorporation

The Toro Company, 8111 Lyndale Ave. South, Bloomington, MN, USA declares that the following unit(s) conform(s) to the directives listed, when installed in accordance with the accompanying instructions onto certain Toro models as indicated on the relevant Declarations of Conformity.

Model No.	Serial No.	Product Description	Invoice Description	General Description	Directive
30555	314000001 and Up	52in Side Discharge Mower	52" SIDE DISCHARGE DECK	52in Side Discharge Mower	2006/42/EC, 2000/14/EC

Relevant technical documentation has been compiled as required per Part B of Annex VII of 2006/42/EC.

We will undertake to transmit, in response to requests by national authorities, relevant information on this partly completed machinery. The method of transmission shall be electronic transmittal.

This machinery shall not be put into service until incorporated into approved Toro models as indicated on the associated Declaration of Conformity and in accordance with all instructions, whereby it can be declared in conformity with all relevant Directives.

Certified:



David Klis
Sr. Engineering Manager
8111 Lyndale Ave. South
Bloomington, MN 55420, USA
September 26, 2013

EU Technical Contact:

Peter Tetteroo
Toro Europe NV
B-2260 Oevel-Westerloo
Belgium

Tel. 0032 14 562960
Fax 0032 14 581911

The Toro Total Coverage Guarantee

A Limited Warranty

Conditions and Products Covered

The Toro Company and its affiliate, Toro Warranty Company, pursuant to an agreement between them, jointly warrant your Toro Commercial product (“Product”) to be free from defects in materials or workmanship for two years or 1500 operational hours*, whichever occurs first. This warranty is applicable to all products with the exception of Aerators (refer to separate warranty statements for these products). Where a warrantable condition exists, we will repair the Product at no cost to you including diagnostics, labor, parts, and transportation. This warranty begins on the date the Product is delivered to the original retail purchaser.
* Product equipped with an hour meter.

Instructions for Obtaining Warranty Service

You are responsible for notifying the Commercial Products Distributor or Authorized Commercial Products Dealer from whom you purchased the Product as soon as you believe a warrantable condition exists. If you need help locating a Commercial Products Distributor or Authorized Dealer, or if you have questions regarding your warranty rights or responsibilities, you may contact us at:

Toro Commercial Products Service Department
Toro Warranty Company
8111 Lyndale Avenue South
Bloomington, MN 55420-1196

952–888–8801 or 800–952–2740
E-mail: commercial.warranty@toro.com

Owner Responsibilities

As the Product owner, you are responsible for required maintenance and adjustments stated in your *Operator's Manual*. Failure to perform required maintenance and adjustments can be grounds for disallowing a warranty claim.

Items and Conditions Not Covered

Not all product failures or malfunctions that occur during the warranty period are defects in materials or workmanship. This warranty does not cover the following:

- Product failures which result from the use of non-Toro replacement parts, or from installation and use of add-on, or modified non-Toro branded accessories and products. A separate warranty may be provided by the manufacturer of these items.
- Product failures which result from failure to perform recommended maintenance and/or adjustments. Failure to properly maintain your Toro product per the Recommended Maintenance listed in the *Operator’s Manual* can result in claims for warranty being denied.
- Product failures which result from operating the Product in an abusive, negligent, or reckless manner.
- Parts subject to consumption through use unless found to be defective. Examples of parts which are consumed, or used up, during normal Product operation include, but are not limited to, brake pads and linings, clutch linings, blades, reels, rollers and bearings (sealed or greasable), bed knives, spark plugs, castor wheels and bearings, tires, filters, belts, and certain sprayer components such as diaphragms, nozzles, and check valves, etc.
- Failures caused by outside influence. Conditions considered to be outside influence include, but are not limited to, weather, storage practices, contamination, use of unapproved fuels, coolants, lubricants, additives, fertilizers, water, or chemicals, etc.
- Failure or performance issues due to the use of fuels (e.g. gasoline, diesel, or biodiesel) that do not conform to their respective industry standards.
- Normal noise, vibration, wear and tear, and deterioration.
- Normal “wear and tear” includes, but is not limited to, damage to seats due to wear or abrasion, worn painted surfaces, scratched decals or windows, etc.

Parts

Parts scheduled for replacement as required maintenance are warranted for the period of time up to the scheduled replacement time for that part. Parts replaced under this warranty are covered for the duration of the original product warranty and become the property of Toro. Toro will make the final decision whether to repair any existing part or assembly or replace it. Toro may use remanufactured parts for warranty repairs.

Deep Cycle and Lithium-Ion Battery Warranty:

Deep cycle and Lithium-Ion batteries have a specified total number of kilowatt-hours they can deliver during their lifetime. Operating, recharging, and maintenance techniques can extend or reduce total battery life. As the batteries in this product are consumed, the amount of useful work between charging intervals will slowly decrease until the battery is completely worn out. Replacement of worn out batteries, due to normal consumption, is the responsibility of the product owner. Battery replacement may be required during the normal product warranty period at owner’s expense. Note: (Lithium-Ion battery only): A Lithium-Ion battery has a part only prorated warranty beginning year 3 through year 5 based on the time in service and kilowatt hours used. Refer to the *Operator's Manual* for additional information.

Maintenance is at Owner’s Expense

Engine tune-up, lubrication, cleaning and polishing, replacement of filters, coolant, and completing recommended maintenance are some of the normal services Toro products require that are at the owner’s expense.

General Conditions

Repair by an Authorized Toro Distributor or Dealer is your sole remedy under this warranty.

Neither The Toro Company nor Toro Warranty Company is liable for indirect, incidental or consequential damages in connection with the use of the Toro Products covered by this warranty, including any cost or expense of providing substitute equipment or service during reasonable periods of malfunction or non-use pending completion of repairs under this warranty. Except for the Emissions warranty referenced below, if applicable, there is no other express warranty. All implied warranties of merchantability and fitness for use are limited to the duration of this express warranty.

Some states do not allow exclusions of incidental or consequential damages, or limitations on how long an implied warranty lasts, so the above exclusions and limitations may not apply to you. This warranty gives you specific legal rights, and you may also have other rights which vary from state to state.

Note regarding engine warranty:

The Emissions Control System on your Product may be covered by a separate warranty meeting requirements established by the U.S. Environmental Protection Agency (EPA) and/or the California Air Resources Board (CARB). The hour limitations set forth above do not apply to the Emissions Control System Warranty. Refer to the Engine Emission Control Warranty Statement supplied with your product or contained in the engine manufacturer’s documentation for details

Countries Other than the United States or Canada

Customers who have purchased Toro products exported from the United States or Canada should contact their Toro Distributor (Dealer) to obtain guarantee policies for your country, province, or state. If for any reason you are dissatisfied with your Distributor's service or have difficulty obtaining guarantee information, contact the Toro importer.