FORM NO. 3313-645

TORO

MODEL NO. 38000-9000001 & UP

OPERATOR'S MANUAL

S-120 SNOWTHROWER

Safety Instructions

To assure maximum safety, optimum performance, and to gain knowledge of the product, it is essential that you or any other operator of the snowthrower read and understand the contents of this manual before the motor is ever started. Pay particular attention to the safety alert symbol which means CAUTION, WARNING or DANGER — "Personal safety instruction". Read and understand the instruction because it has to do with safety. Failure to comply with instruction may result in personal injury.

The snowthrower is designed and tested to offer reasonably safe service; however, failure to operate it in accordance with the following Safety Instructions MAY RESULT IN PERSONAL INJURY.

BEFORE OPERATING

1. Read and understand the contents of this manual before operating the machine. Become familiar with all controls and know how to stop quickly.

2. Keep everyone, especially children and pets, away from area of operation. Never allow children to operate the snowthrower.

3. Inspect area thoroughly where snowthrower will be used. Remove door mats, sleds, boards, sticks, wire and any other foreign objects which might be picked up and thrown by the snowthrower.

4. Keep all shields and safety devices in place. If a shield, safety device or decal is defective or damaged, repair or replace it before operation is commenced. Also, tighten any loose nuts, bolts and screws.

5. Wear adequate winter clothing and rubber boots that will assure footing on slippery surfaces. Do not wear loose fitting clothing that could possibly get caught in moving parts.

6. Do not use snowthrower on gravel or crushed rock surfaces unless used in accordance with Operating Instructions: refer to page 5, item 5.

7. WARNING — To prevent electric shock, use only an extension cord suitable for out-door use in cold temperatures. Thoroughly inspect snowthrower power cord before operating unit. If cord is damaged do not operate unit. Replace or repair damaged cord immediately. Contact your TORO dealer if assistance is required.

8. To prevent disconnection of snowthrower cord from extension cord during operation make a knot: refer to page 4, Figure 5 for proper procedures.

WHILE OPERATING

9. Keep people and pets a safe distance away from the snowthrower and area of operation.

10. Avoid accidental starting. Don't carry plugged in snowthrower with hand on switch. Keep away from switch while plugging in cord.

COPYRIGHT © ALL RIGHTS RESERVED
The Toro Company - 1988
MINNEAPOLIS, MN 55420 — U.S.A.

Safety Instructions

11. If cord is damaged in any manner while plugged in, pull extension cord from wall receptacle.

12. Do not abuse cord. Never carry snowthrower by cord or pull sharply on cord to disconnect from receptacle. Keep cord away from heat, oil and sharp edges.

13. Operate the snowthrower only when there is good visibility or light. Always maintain secure footing and balance and keep a firm grip on the handles. DO NOT USE SNOWTHROWER ON A ROOF.

14. Be attentive when using the snowthrower, and stay alert for holes in the terrain and other hidden hazards.

15. STAY AWAY FROM DISCHARGE OPENING WHILE OPERATING THE SNOWTHROWER. Keep face, hands, feet and any other part of your body or clothing away from concealed, moving or rotating parts.

16. Keep all guards in place and in working order.

17. Never operate snowthrower near bystanders, glass enclosures, automobiles and trucks, window wells or a dropoff without proper adjustment of the snow discharge angle.

18. Clear snow from slopes by going up and down; never across the face, and use caution when changing directions. Never clear snow from steep slopes.

19. Do not overload the snowthrower by clearing snow at too fast a rate.

20. If a solid object is hit or snowthrower vibrates abnormally, stop snowthrower and wait for all movement to stop. Disconnect extension cord and check snowthrower immediately for possible damage, an obstruction or loose parts. Vibration is generally a warning of trouble. Repair any damage before operating snowthrower again.

21. Disconnect cord from receptacle and remove key from handle if snowthrower will be left unattended.

22. Before adjusting, cleaning, repairing and inspecting the snowthrower, and before unclogging the discharge chute, stop snowthrower and wait for all moving parts to stop. Also, disconnect cord from receptacle to prevent accidental starting.

23. Let machine run for a few minutes after clearing snow so moving parts do not freeze.

MAINTAINING SNOWTHROWER

24. Perform only those maintenance instructions described in this manual. Disconnect cord from receptacle before performing maintenance procedures to prevent possibility of accidental starting. If major repairs are ever needed, contact the local Authorized TORO Service Dealer for assistance.

25. Keep snowthrower in safe operating condition by keeping nuts, bolts and screws tight. Check all fasteners frequently to assure they are tight.

26. Store snowthrower indoors when not in use, in dry, locked-up place out of the reach of children. Keep extension cord with snowthrower to prevent misplacement and remove key from handle.

27. At the time of manufacture, the snowthrower conforms with or exceeds safety standards in effect for snowthrowers. Therefore, to assure optimum performance and safety, purchase genuine TORO replacement parts and accessories to keep the Toro all TORO. NEVER USE "WILL FIT" REPLACEMENT PARTS AND ACCESSORIES. The Toro logo assures genuineness.

Safety Instructions

SAFETY DECALS

Safety and instruction decals are located on the snowthrower chasis. Replace any decal that is damaged.

⚠ DANGER

AVOID INJURY! FROM ROTOR/IMPELLER. 64-7000

KEEP HANDS, FEET AND CLOTHING AWAY FROM DISCHARGE AREA.
DO NOT STEP IN FRONT OF MACHINE. OR USE HANDS TO UNCLOG CHUTE.
STOP MOTOR AND UNPLUG CORD BEFORE UNCLOGGING SNOW OR DEBRIS.
DO NOT DIRECT DISCHARGE AT OTHERS. USE FOR SNOW REMOVAL ONLY.
TO PREVENT ELECTRIC SHOCK. REPLACE DAMAGED CORD IMMEDIATELY.

▣ DOUBLE INSULATED — When servicing, use only identical replacement parts.

Read operator's manual for operating and safety instructions. Replacement manual available by sending model and serial numbers to the TORO CO. 8111 Lyndale Av. S., Mpls. MN 55420

UL LISTED SNOW MOVER 546X

TORO S120 MODEL 38000
115 VAC 60 HZ 9.5 AMP.

(Part No. 64-7000)

Setting-Up Instructions

INSTALL UPPER HANDLE

1. Stand snowthrower upright and position upper handle in inverted position to prepare for handle assembly (Fig. 1). Inspect the open internal wiring, if damaged do not assemble; contact your service dealer.

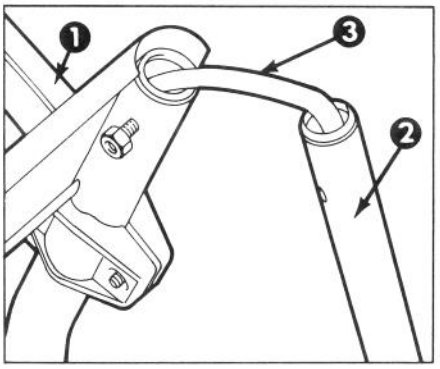

Figure 1

1. **Snowthrower**
2. **Upper Handle**
3. **Electrical Cord**

NOTE: Use care so electrical cord will not be damaged (Fig. 1).

2. Remove and discard bushing inserted into lower right hand handle for shipping purposes, then remove two locknuts and carriage bolts holding escutcheon plate to lower handle and remove escutcheon plate (Fig. 2).

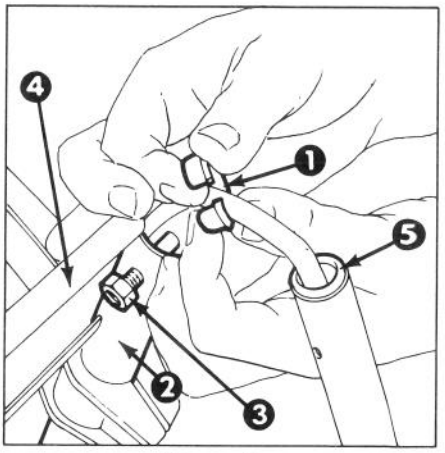

Figure 2

1. **Bushing**
2. **Lower Right Handle**
3. **Carriage Bolt and Locknut**
4. **Escutcheon Plate**
5. **Upper Handle Bushing. DO NOT REMOVE**

NOTE: Do not remove bushing from upper handle (Fig. 2).

3. Align upper handle with lower handle and carefully insert upper handle until holes in upper handle are aligned with holes in lower handle.

4. Mount escutcheon plate over handle and install carriage bolts with heads of

THE TORO PROMISE

S-120 SNOWTHROWER

A FULL ONE YEAR WARRANTY

The Toro Company warrants your TORO Product against defects in material or workmanship. During the warranty period, Toro will, at its option, replace a defective product with a new or rebuilt unit, or will repair or replace any defective parts. The following time periods from the date of purchase apply:

Residential . . . . . .1 Year
Residential Products Used Commercially . . . . . .45 Days

The cost of replacement or repair is included, but the customer pays the transportation costs.

Should you feel your TORO Product is defective and wish to rely on The Toro Promise, you may return it to:

1. The original place of purchase

OR

2. A TORO Electrical Service Dealer

OR

3. **The Toro Service Center**
   5300 Shoreline Blvd.
   Mound, MN 55364
   (Postage Prepaid)

Upon return of your unit to one of the above, it will be inspected and you will be advised whether the product is defective. If defective, arrangements will be made for repair or replacement without extra charge to you.

If for any reason you are dissatisfied with the analysis of the defect or the service performed, you may contact us.

Write: TORO Customer Service Department
Home Improvement Division
8111 Lyndale Avenue South
Minneapolis, MN 55420

THERE IS NO OTHER EXPRESS WARRANTY

THE TORO COMPANY IS NOT LIABLE FOR INDIRECT OR CONSEQUENTIAL DAMAGES IN CONNECTION WITH THE USE OF THE PRODUCT.

Some states do not allow the exclusion or limitation of incidental or consequential damages, so the above limitation or exclusion may not apply to you.

This Warranty applies only to parts or components which are defective and does not cover repairs necessary due to normal wear, misuse, accidents, or lack of proper maintenance. Regular, routine maintenance of the unit to keep it in proper operating condition is the responsibility of the owner.

All warranty repairs reimbursable under The Toro Promise must be performed by a TORO Electrical Service Dealer using Toro approved replacement parts.

Repairs or attempted repairs by anyone other than a TORO Electrical Service Dealer are not reimbursable under The Toro Promise. In addition, these unauthorized repair attempts may result in additional malfunctions, the correction of which is not covered by warranty.

This warranty gives you specific legal rights, and you may also have other rights which vary from state to state.

COUNTRIES OTHER THAN THE UNITED STATES OR CANADA

Customers who have purchased TORO products exported from the United States or Canada should contact their TORO Distributor (Dealer) to obtain guarantee policies for your country, province or state. If for any reason you are dissatisfied with your Distributor's service or have difficulty obtaining guarantee information, contact the TORO importer. If all other remedies fail, you may contact us at The Toro Company.

Setting-Up Instructions

carriage bolts to outside of handles (Fig. 3). Assemble nuts and tighten assembly.

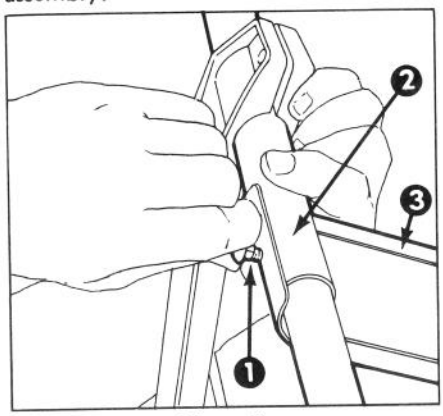

Figure 3

1. **Carriage Bolt**
2. **Right Hand Handle Assembly**
3. **Escutcheon Plate**

WARNING

Install carriage bolt through right hand side of handle with fingers only to avoid damaging the electric cord in handle and causing possible personal injury.

DO NOT FORCE CARRIAGE BOLT THROUGH HANDLE.

DO NOT USE TOOLS UNTIL CARRIAGE BOLT IS FULLY INSTALLED IN HANDLE.

ADJUSTING MIDDLE HANDLE

Middle handle is adjustable for operator comfort. To adjust handle:

1. Simulate operation of the snowthrower to determine most comfortable handle height. Hold unit by upper and middle handle and use a swinging or sweeping motion to achieve a feel for handle comfort.

2. If handle location is not comfortable, loosen clamping screw on both sides with phillips head screwdriver, move middle handle to desired position and tighten screws to secure handle (Fig. 4).

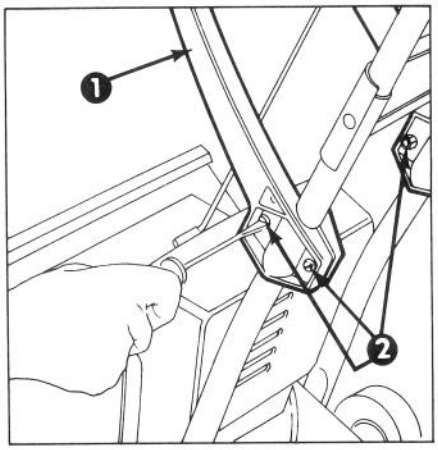

Figure 4

1. **Middle Handle** 2. **Clamping Screws**

Operating Instructions

PREPARATION

IMPORTANT: Thoroughly inspect snowthrower power cord before operating unit. If cord is damaged do not operate unit. Replace or repair damaged cord immediately. Contact your TORO dealer if assistance is required.

Tie the extension cord to the S-120 snowthrower cord before connecting the two components to prevent separation of the two during operation (Fig.5).

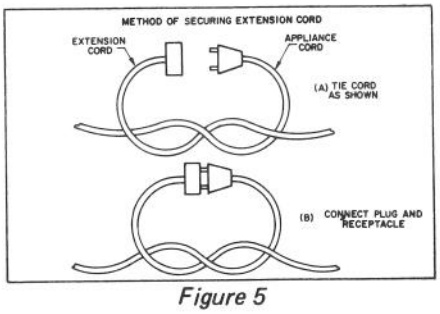

Figure 5

Maintenance

screws with a 5/16 inch socket or open end wrench (Fig. 10).

2. Slip paddle out from between drum edges. Discard paddle.

3. Insert new paddle, align holes and install mounting screws. Tighten screws taking care not to overtighten thereby stripping threads out of the mounting holes.

REPLACING NYLON SCRAPER

A nylon scraper blade is located at the lower end of the impeller housing which can be replaced if it is worn.

1. Turn S-120 on its side, remove scraper blade mounting nuts with 7/16 inch wrench and remove scraper blade .

2. Install scraper blade and secure by tightening nuts.

PREPARING SNOWTHROWER FOR STORAGE

1. Examine snowthrower thoroughly for worn, loose or damaged parts. If parts repair or replacement is necessary, contact your local Authorized TORO Service Dealer for assistance.

2. Examine extension cord and power cord thoroughly for signs of excessive wear or damage. Replace, if worn or damaged. Contact your local Authorized TORO Service Dealer for genuine TORO replacement parts.

3. Store snowthrower in a clean, dry place and cover it to provide protection.

4. Store the extension cord with the snowthower to prevent misplacement.

Identification and Ordering

The S-120 has two identification numbers: a model number and a serial number. The two numbers are stamped into a plate attached to the handle tube assembly. In any correspondence concerning the S-120, supply the model and serial numbers to assure that correct information and replacement parts are obtained.

To order replacement parts from an Authorized TORO Service Dealer, supply the following information.

1. Model and serial numbers of the S-120.

2. Part number, description and quantity of part(s) desired.

NOTE: Do not order by reference number if a parts catalog is being used; use **PART NUMBER.**

Operating Instructions

Then, insert extension cord into wall outlet and insert key into hole at rear of handle (Fig. 6).

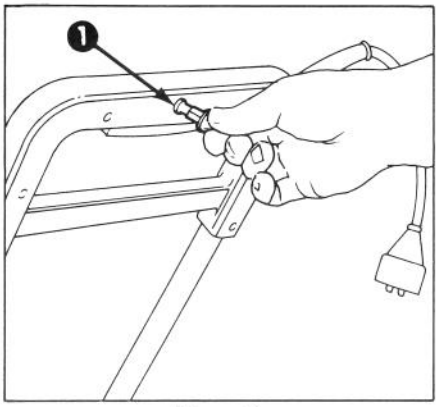

Figure 6

1. Key

⚠ CAUTION

Use only an extension cord suitable for outdoor use in cold temperatures.

STARTING/STOPPING

To start impeller, assure key is installed, squeeze control handle; to stop, release control handle (Fig. 7).

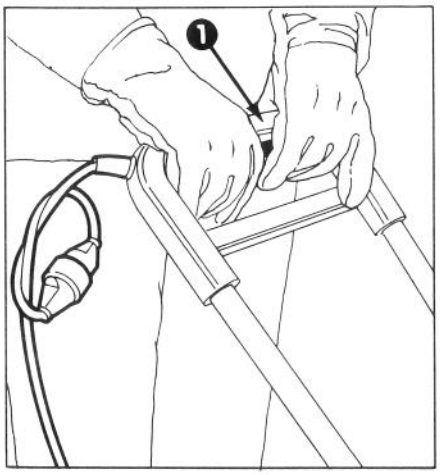

Figure 7

1. Control Handle

OPERATING TIPS

1. Squeeze the control handle to start the impeller (Fig. 7), tilt the S-120 forward until the impeller blades contact the ground. The impeller action will pull the S-120 forward allowing you to follow along behind with only a minimal effort required. The depth and weight of the snow will govern the forward speed.

2. Direct the snow to left, right or straight ahead by twisting the vane directional control attached to the middle handle (Fig. 8).

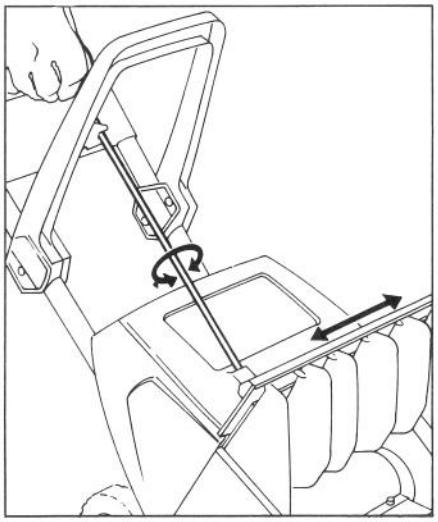

Figure 8

3. For most efficient snow throwing, keep vanes parallel, throw snow downwind and slightly overlap each swath.

4. Keep the area to be cleared free of stones, toys or other foreign objects which may be picked up and thrown by the impeller blades. Such items could be covered by snowfall and therefore be unnoticed until struck by the impeller blades. Always be sure to keep children and pets away from area of operation.

5. Should you find it necessary to clear snow from over crushed rock or

Operating Instructions

gravel driveways, push down on handle to raise impeller blades clear of loose material that could be thrown by the blades.

6. Hold the unit by the upper and middle handles and use a swinging or sweeping motion when clearing steps or deep drifts.

7. Keep cord clear of obstructions, sharp objects and impeller blades. Do not pull sharply on cord or abuse it in any manner. Frequently inspect cord for damage. If cord becomes damaged in any way, replace it.

8. Remove the key and disconnect the extension cord when through using the snowthrower. Keep the key in a memorable place so it will not be misplaced. Set the vanes in a vertical position and hang snowthrower up *by switch guard* for convenient storage, and to prevent switch damage (Fig. 9). Hang the extension cord with the snowthrower so it will not be misplaced or possibly damaged (Fig. 9).

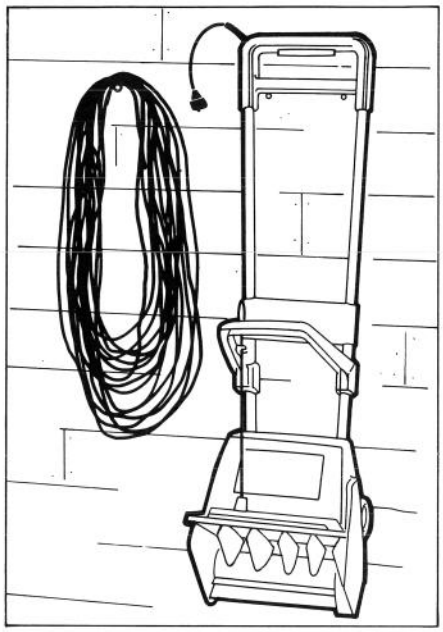

Figure 9

Maintenance

⚠ CAUTION

To prevent accidental operation of S-120 snowthrower while performing maintenance, disconnect extension cord and remove key from handle.

LUBRICATING SNOWTHROWER

The S-120 snowthrower does not have to be lubricated as all bearings are lubricated for the life of the product.

REPLACING IMPELLER PADDLES

Worn paddles can be replaced with the following procedures:

1. Remove the paddle mounting

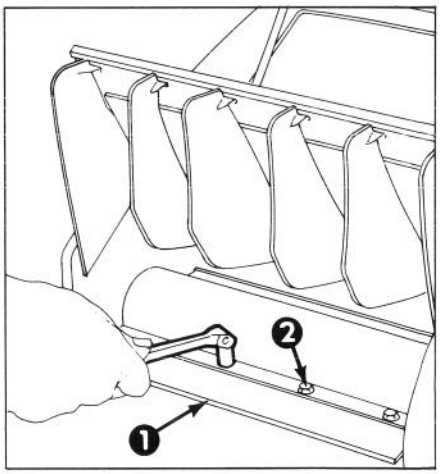

Figure 10

1. **Impeller Paddle**
2. **Impeller Mount Screws**