Form No. 3374-231 Rev C

TORO®

Count on it.

Parts Catalog

CM-658H-S Concrete Mixer

Model No. 68004—Serial No. 313000001 and Up

Register at www.Toro.com.
Original Instructions (EN)

3374-231 C

Ordering Replacement Parts

To order replacement parts, please supply the part number, the quantity, and the description of each part desired.

Understanding Reference Numbers

Each identified part in an illustration has a reference number. The reference number for a part also appears in the parts list, along with other information about the part.

This catalog uses two special reference number formats, one to indicate parts in a service assembly and another to indicate the quantity of a given part in an illustration.

Service Assembly Reference Numbers

Parts in service assemblies have reference numbers in the form a:b. The a represents the reference number of the entire service assembly and the b represents a sequential number unique to each part within the service assembly.

For example, a wheel assembly might be identified by reference number 6, the tire by 6:1, the valve by 6:2, and the wheel by 6:3. When you order the assembly identified by reference number 6, you receive all parts identified by reference numbers 6:1,6:2, and 6:3. However, you may also order any part individually. Reference numbers of this type appear in illustration and in parts lists.

Reference Numbers Indicating Quantity

In an illustration, if a reference number indicates more than one part, the reference number has the form nX y. The n represents the quantity of the part, the X is the multiplication symbol, and the y represents the reference number.

For example, in an illustration, the reference number 2X 37 means that two of the parts identified by reference number 37 are indicated.

List of Abbreviations

AR: as required

ASM: assembly

BBC: blade brake control

BHTF: button head thread forming

CARR: carriage

CCW: counter clockwise

CW: clockwise

DEG: degrees

DPA: Dual Point Adjustment

ECM: electronic control module

EXT: external

FH: flat head

GA: gauge

HD: heavy-duty

HF: hex flange

HH: hex head

HHF: hex head flange

HHFTF: hex head flange thread forming

HJ: hex jam

HLH: hex lag head

HOC: height-of-cut

HSBH: hex socket button head

HSFH: hex socket flat head

HSH: hex socket head

HWH: hex washer head

HWHTF: hex washer head thread forming

HYD: hydraulic

LH: left hand

LP: Liquefied Petroleum Gas

LPG: Liquefied Petroleum Gas

NI: nylon insert

NPTF: national pipe thread fine

PFH: phillips flat head

PPH: phillips pan head

PPHTF: phillips pan head thread forming

PRH: phillips round head

PTH: phillips truss head

PTO: power-take-off

RH: right hand

ROPS: roll-over protection system

RRB: rear roller brush

SFH: slotted fillister head

SHH: slotted hex head

SHWH: slotted hex washer head

SPH: slotted pan head

SQH: square head

SRH: slotted round head

STD: standard

TAP: self tapping

TTH: torx truss head

Contents

Frame and Yoke Assembly 4
Axle Assembly 5
Hub Assembly No. 125-8171 6
Engine and Drive Assembly 7
Drum Assembly 8
Cowl Assembly 9
Attachments and Accessories 10

© 2014—The Toro® Company
8111 Lyndale Avenue South
Bloomington, MN 55420

Contact us at www.Toro.com.
Printed in the USA.
All Rights Reserved

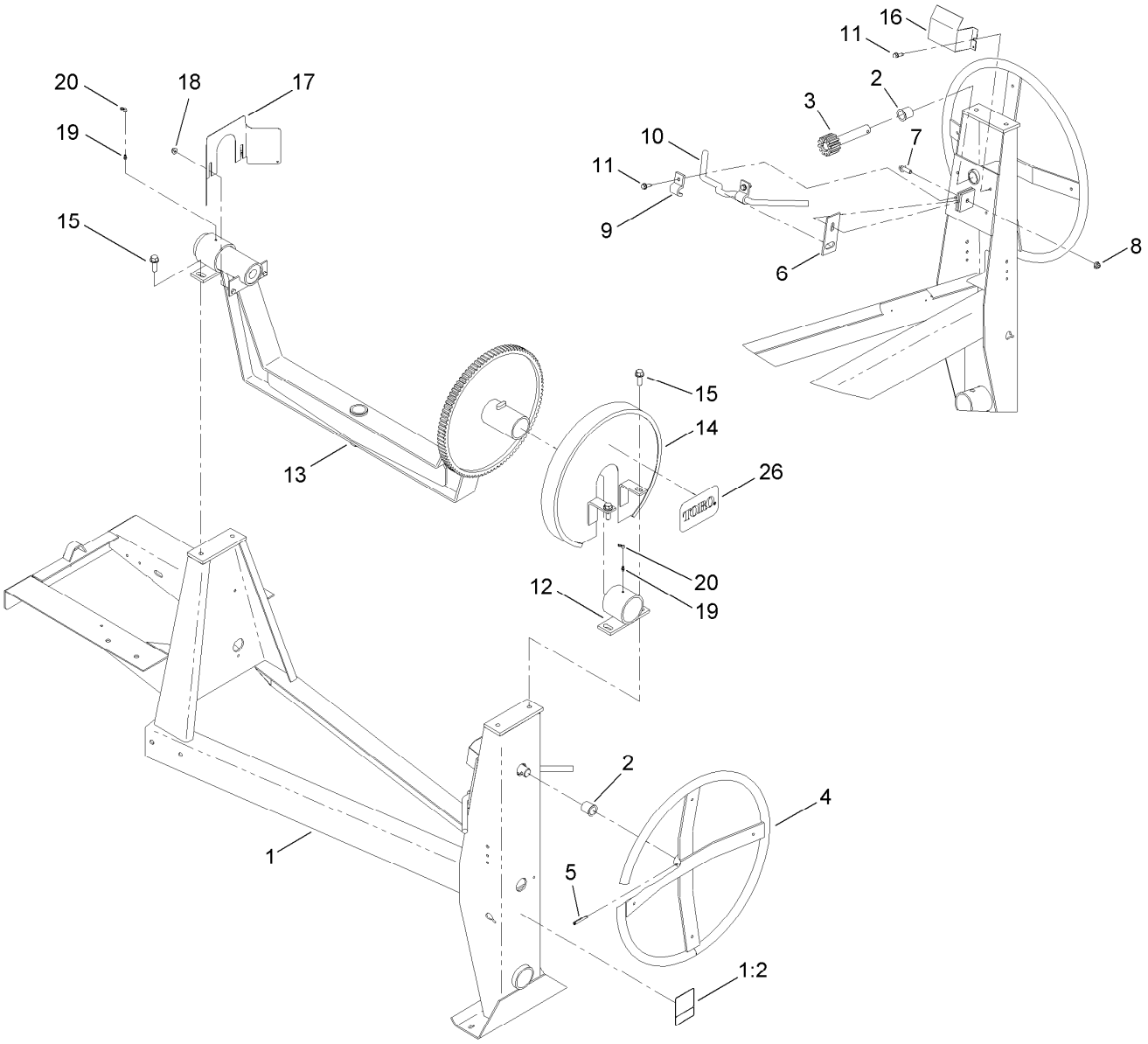

Frame and Yoke Assembly

Ref.	Part Number	Qty.	Description
1	127-2813	1	Frame ASM
1:2	125-8216	1	Decal-Safety Chain, Towing
2	ST32032	2	Bushing-Nylon
3	ST22029	1	Shaft-Tilt
4	ST22096-03	1	Handwheel
5	32121-27	1	Pin-Roll
6	ST27619-03	1	Dog-Brake
7	3234-24	1	Screw-HHF
8	104-8301	1	Nut-Flange, NI
9	ST27559-03	2	Bracket-Handle
10	ST27621-03	1	Handle-Brake

Ref.	Part Number	Qty.	Description
11	701243	4	Screw-HWHTF
12	ST24349-03	2	Trunnion
13	125-6307	1	Yoke ASM
14	ST27617-03	1	Guard-Brake, Upper
15	ST80031	4	Screw-HWH
16	ST27618-03	1	Guard-Brake, Lower
17	ST27144-03	1	Guard-Pinion
18	104-8300	2	Nut-Flange, NI
19	ST46042	2	Fitting-Grease
20	ST47001	2	Cap-Plug
26	99-4693	1	Decal

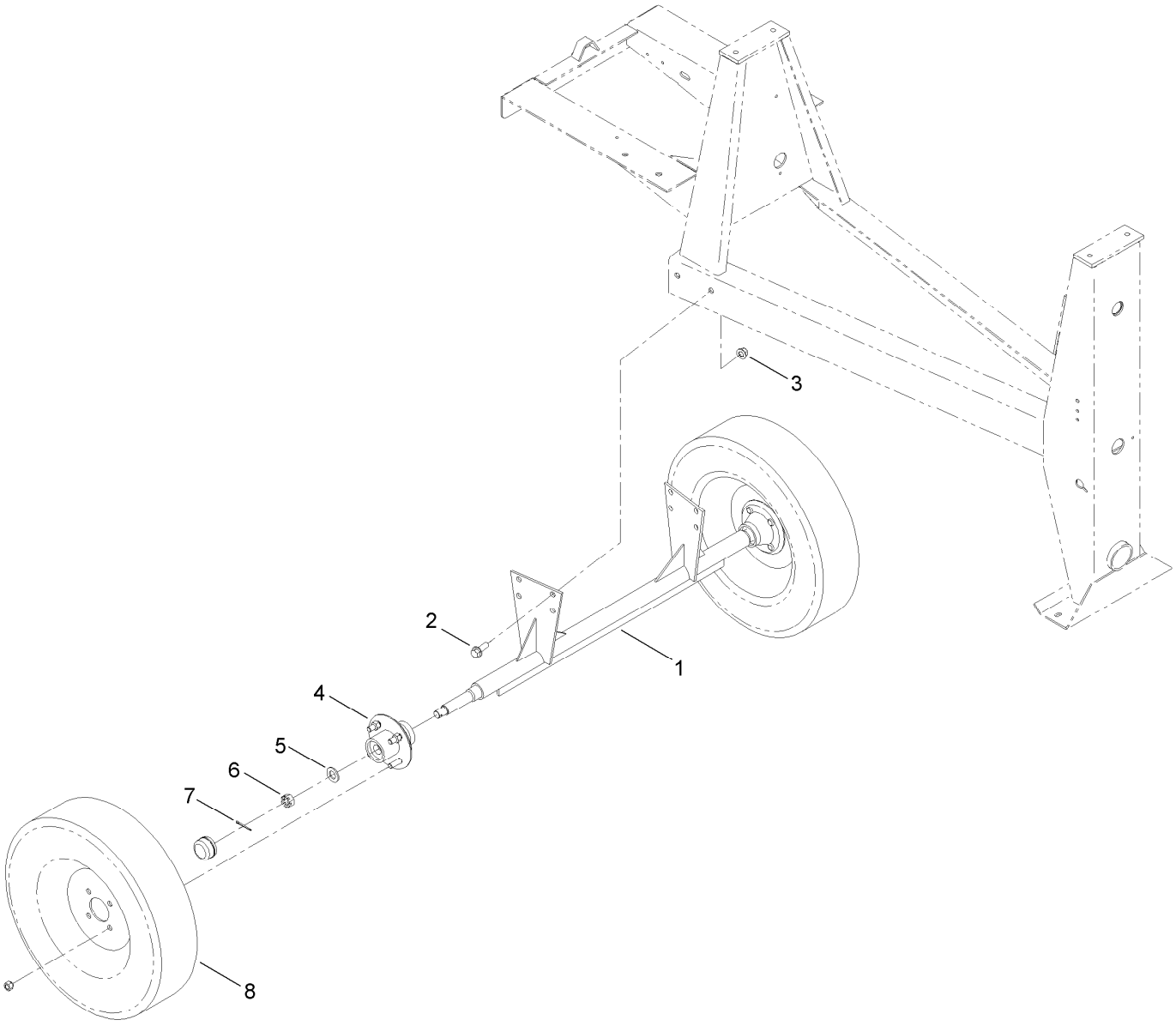

Axle Assembly

Ref.	*Part Number*	*Qty.*	*Description*
1	ST22031-03	1	Axle
2	100-6116	4	Screw-HHF
3	99-5107	4	Nut-Lock
4	125-8171	2	Hub ASM
5	3256-28	2	Washer-Flat
6	ST80054	2	Nut
7	3272-13	2	Pin-Cotter
8	ST32306	2	Tire And Rim ASM

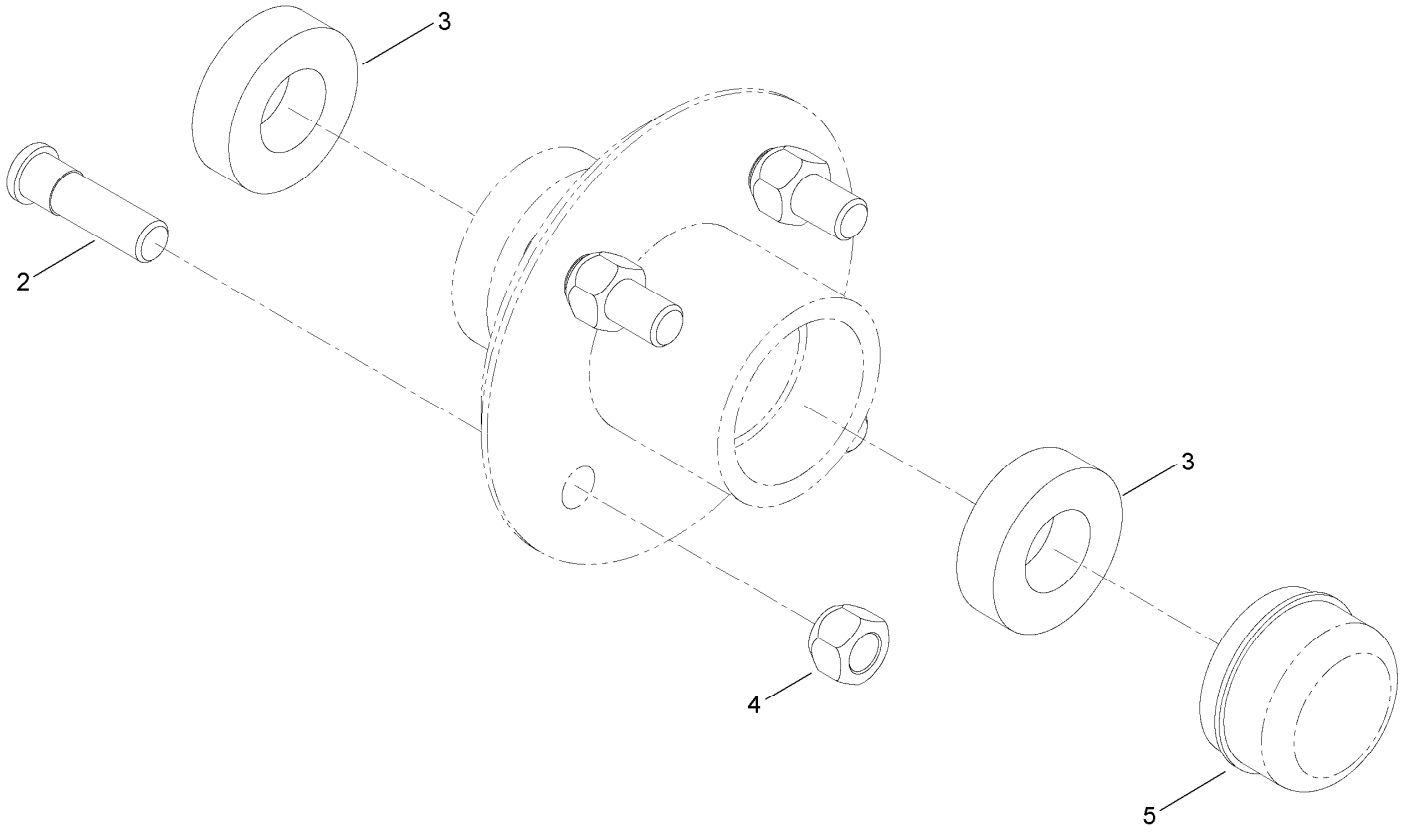

Hub Assembly No. 125-8171

Ref.	*Part Number*	*Qty.*	*Description*
2	ST39190	4	Stud-Wheel
3	ST32233	2	Bearing-Roller
4	ST80045	4	Nut-Lug
5	ST34573	1	Cap-Dust

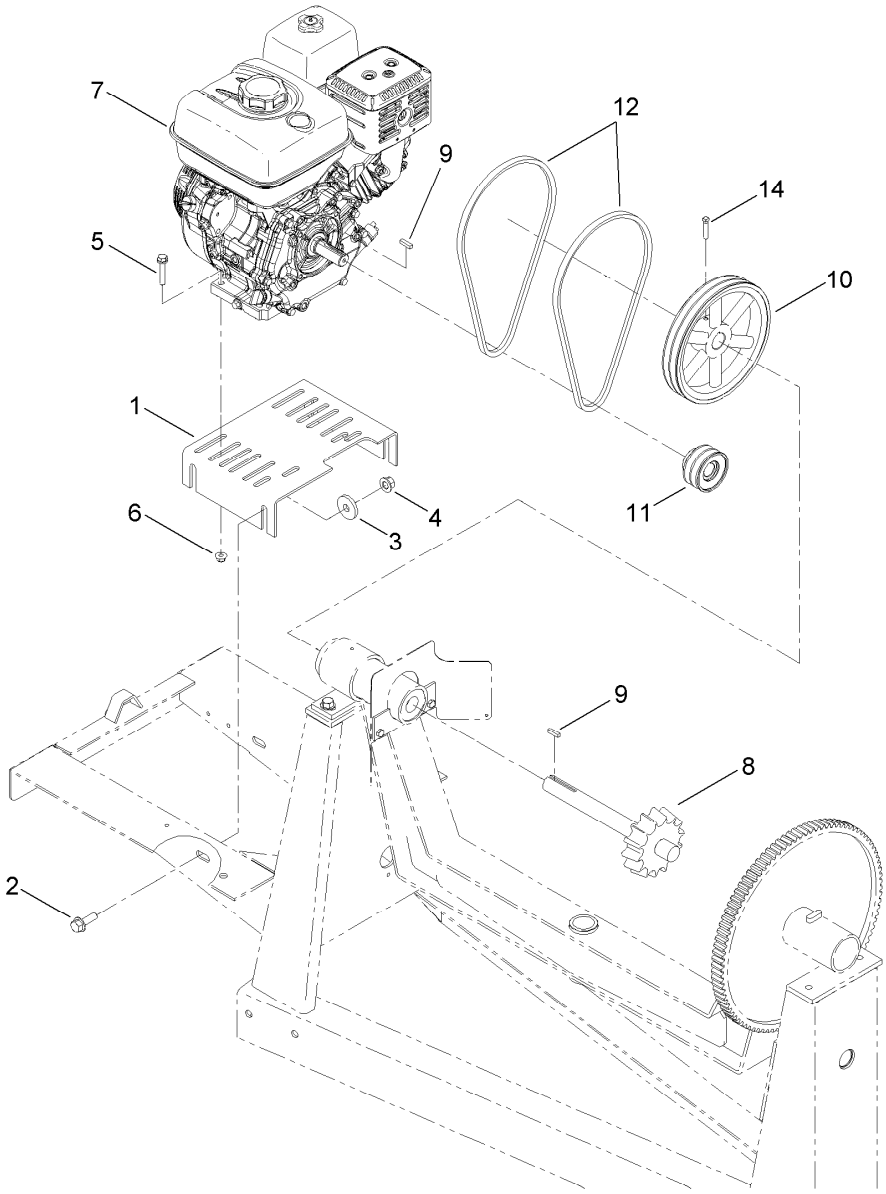

Engine and Drive Assembly

Ref.	*Part Number*	*Qty.*	*Description*
1	ST28040-03	1	Base-Motor
2	100-6116	4	Screw-HHF
3	ST26326	4	Washer-Flat
4	99-5107	4	Nut-Lock
5	108-3742	4	Screw-HHF
6	104-8301	4	Nut-Flange, NI
7	125-4812	1	Engine-Honda, Gx240 ●
8	ST21487	1	Shaft-Drive
9	5-7280	2	Key
10	ST34986-03	1	Sheave
11	ST34984	1	Sheave
12	127-0075	2	Belt-V
14	909546	2	Screw-Set, SQH

● Obtain parts from www.honda-engines.com

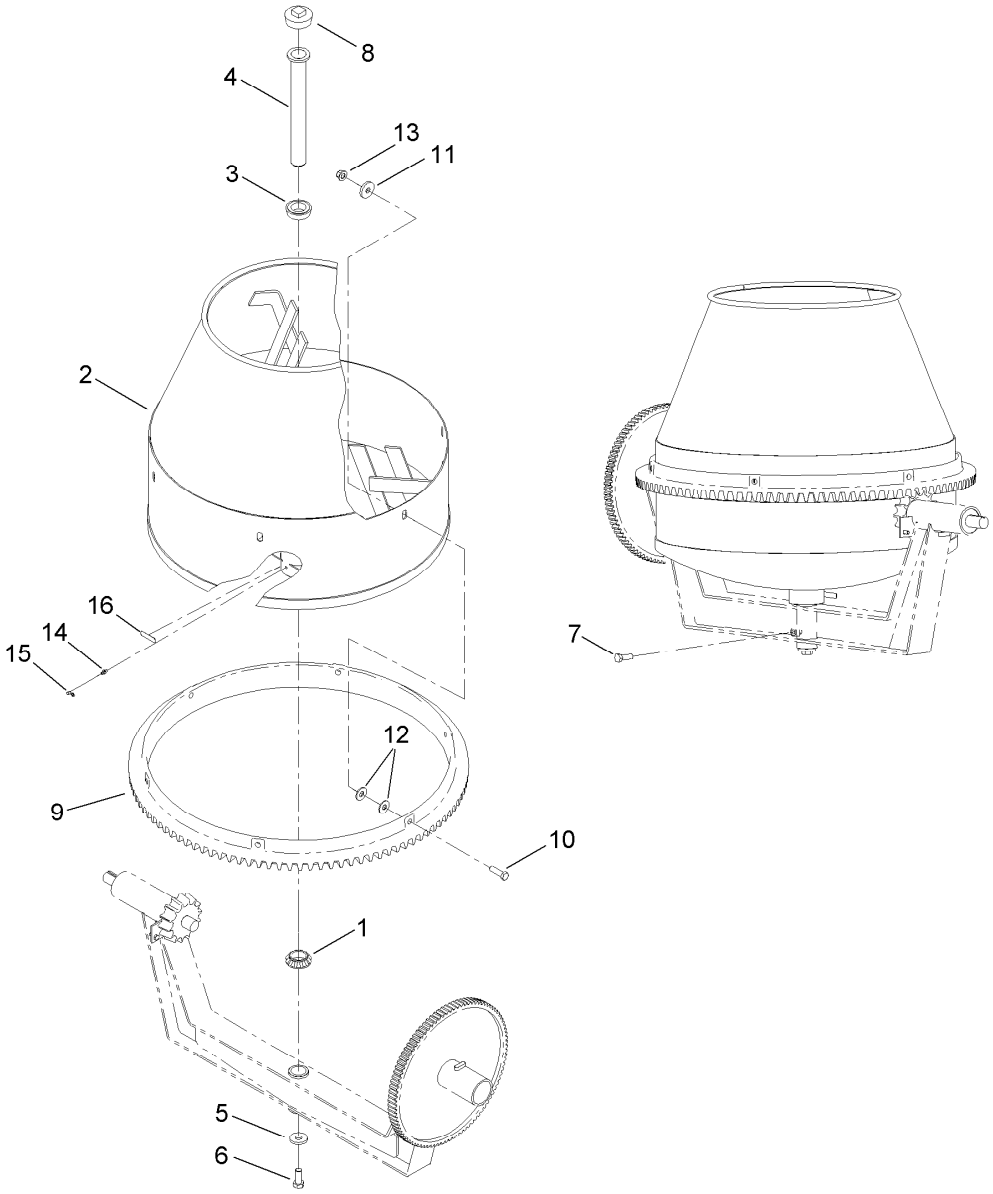

Drum Assembly

Ref.	Part Number	Qty.	Description
1	ST32161	1	Bearing-Roller
2	125-6305-01	1	Drum
3	ST32086	1	Bearing
4	ST27267	1	Spindle
5	ST27413	1	Washer-Flat
6	327-4	1	Screw-HH
7	325-6	1	Screw-HH
8	ST46022	1	Plug
9	ST26095-01	1	Gear-Ring
10	325-7	6	Screw-HH
11	ST26326	6	Washer-Flat
12	3256-6	12	Washer-Flat
13	99-5107	6	Nut-Lock
14	ST46057	1	Fitting
15	ST47001	1	Cap-Plug
16	125-8175	1	Decal-Grease

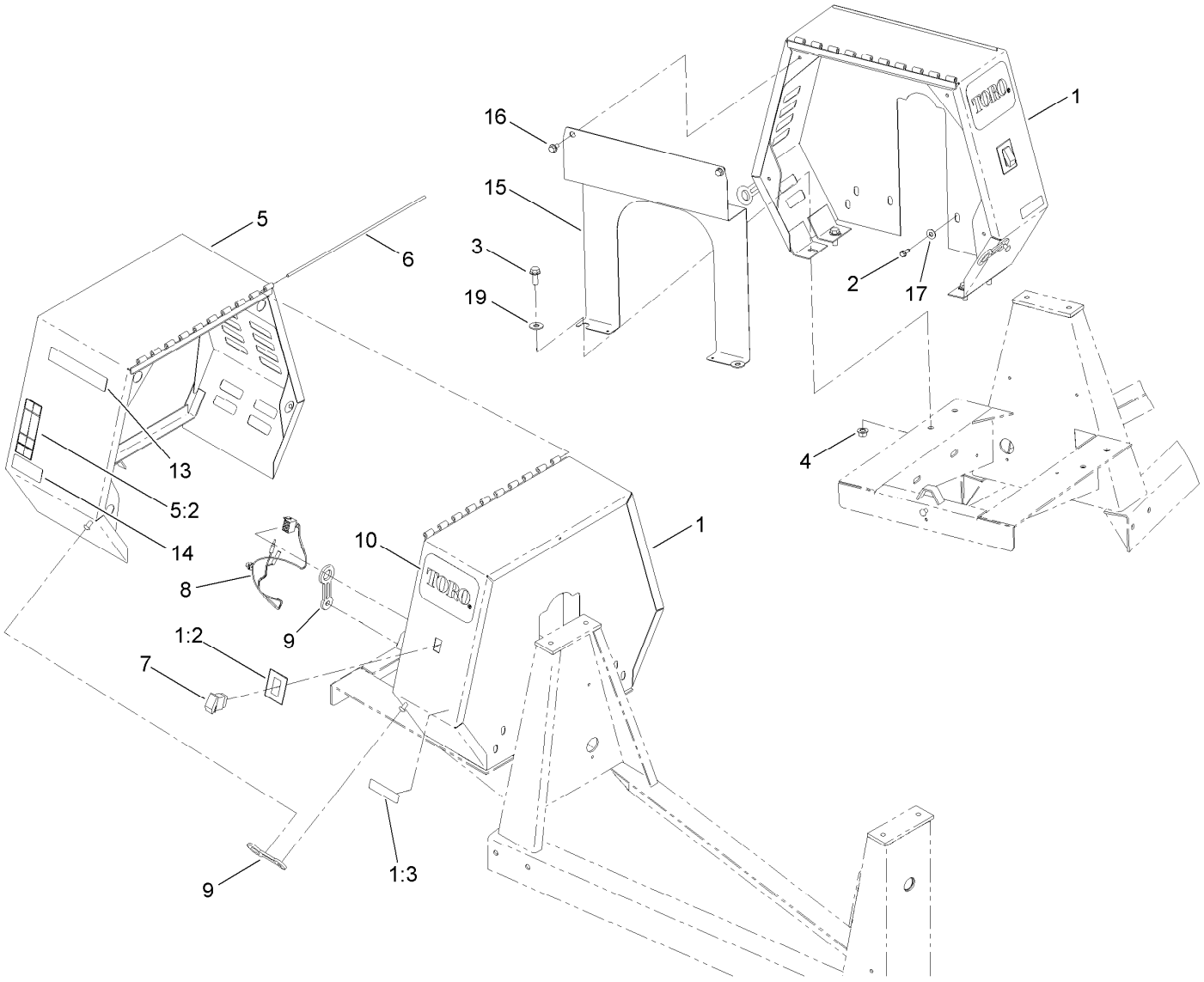

Cowl Assembly

Ref.	Part Number	Qty.	Description
1	127-2811	1	Stationary Cowl ASM
1:2	125-4940	1	Decal-Engine Stop
1:3	117-2718	1	Decal-Arrester, Spark
2	701243	2	Screw-HWHTF
3	3234-38	4	Screw-HHF
4	99-5107	4	Nut-Lock
5	127-1685	1	Movable Cowl ASM
5:2	125-4939	1	Decal-Warning
6	ST44368	1	Pin
7	95-8999	1	Switch

Ref.	Part Number	Qty.	Description
8	125-4877	1	Harness-Wire, Mixer
9	ST47182	3	Latch-Rubber
10	67-7320	1	Decal
13	125-4936	1	Decal
14	125-4942	1	Decal
15	125-8218-03	1	Plate-Engine
16	110-9380	2	Screw-HWH
17	3256-4	2	Washer-Flat
19	3256-6	2	Washer-Flat

Attachments and Accessories

For 68004 CM-658H-S Concrete Mixer

Product Name	Model/Part
31 inch Forged Tow Pole Hitch	68056
31 inch Pintel Tow Pole Hitch	68058
31 inch Stamped Tow Pole Hitch	68060
Trailer Light Kit	68062

Notes:



Count on it.