Form No. 3379-504 Rev B

Diagnostic Cable Kit

DD Series Directional Drill or RT Series Traction Unit

Model No. 127-8401

Installation Instructions

⚠ WARNING

CALIFORNIA
Proposition 65 Warning

This product contains a chemical or chemicals known to the State of California to cause cancer, birth defects, or reproductive harm.

Installation

Note: Use this kit as a data connection between the ECU (electronic control unit) on your machine and the computer that you will use to analyze the component functions of the machine. In addition to this kit, you will need 2 software applications installed on your computer: The Plus+1 Guide Service Tool created by Sauer Danfoss and the system diagnostic software created by The Toro® Company.

Preparing your Computer

Downloading the Plus+1 Guide Service Tool Software

1. On your computer, navigate to the Toro Company Portal for Plus+1 GUIDE Service Tool Software & License to download.
2. Navigate to Gateway Parts and Service Center.
3. Click the Service Library tab.
4. Scroll to the Underground Equipment tab.
5. Click the Diagnostic Software link.
6. Click the Plus+1 GUIDE Service Tool Software & License link to download it.
7. When the download is complete, the Plus+1 icon will appear on your desktop.
8. On your computer, navigate to the Toro Company Portal for the correct Diagnostic file.
9. Navigate to Gateway Parts and Service Center.
10. Click the Service Library tab.
11. Scroll to the Underground Equipment tab.
12. Click the Diagnostic Software link.
13. Click the product type.
14. Click the model number to obtain the correct diagnostic file.
15. Save the diagnostic file to your desktop.

© 2014— The Toro® Company
8111 Lyndale Avenue South
Bloomington, MN 55420

Register at www.Toro.com.

Original Instructions (EN)
Printed in the USA
All Rights Reserved

3379-504 B

Installing the Toro System Diagnostic Software

This procedure describes how to installing the system diagnostic software from the Gateway Parts and Service Center website for the Toro Company.

1. Go to the Gateway Parts and Service Center.
2. Open the Plus+1 GUIDE Service Tool.
3. Click on the diagnostic icon on the top tool bar.
4. The diagnostic program will load in Plus+1 GUIDE Service Tool.
5. Refer to form 2000–4002 Toro Plus+1 Diagnostic Software Instructional Manual for further information.

Installing the Adapter Harness and Diagnostic Cable

1. Select the harness adapter (Figure 1) for your machine by using the table below.

Adapter Table

Product type	Product Name	Adapter Harness Type
Directional drill	DD1215	3-pin connector
	DD1416	3-pin connector
	DD2024	3-pin connector
	DD3238	3-pin connector
	DD4045	9-pin connector
Ride on Trencher	RT960	9-pin connector
	RT1000	9-pin connector
	RT1160	9-pin connector
	RT1200	9-pin connector

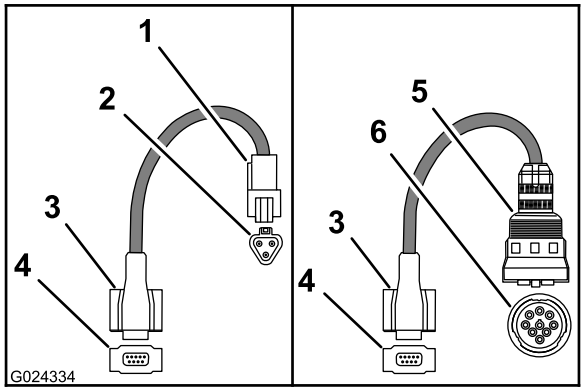

Figure 1

1. 3-pin connector
2. 3-pin connector (end view)
3. 9-socket connector
4. 9-socket connector (end view)
5. 9-pin connector
6. 9-pin connector (end view)

2. Connect the 9-socket connector to the 9-pin connector of the diagnostic cable (Figure 2).

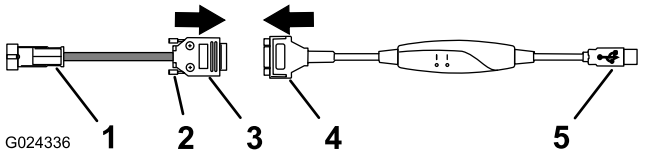

Figure 2

1. 3-pin or 9-pin connector
2. Thumbscrew
3. 9-socket connector
4. 9-pin connector
5. USB Connector

3. Secure the adapter-harness connector to the diagnostic-cable connector with the 2 thumbscrews on the adapter connector (Figure 2).
4. At the machine, remove the dust cap from the diagnostic-port connector for the machine (Figure 3, Figure 4, or Figure 5).

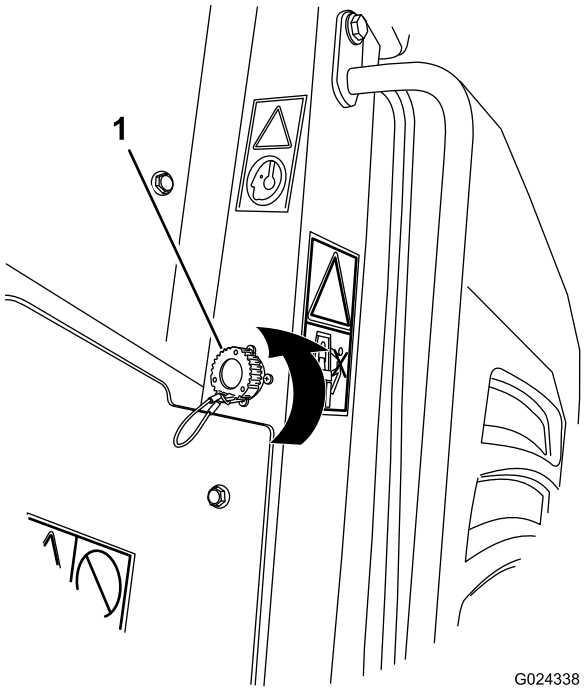

Figure 3

1. Dust cap (RT products – right side)

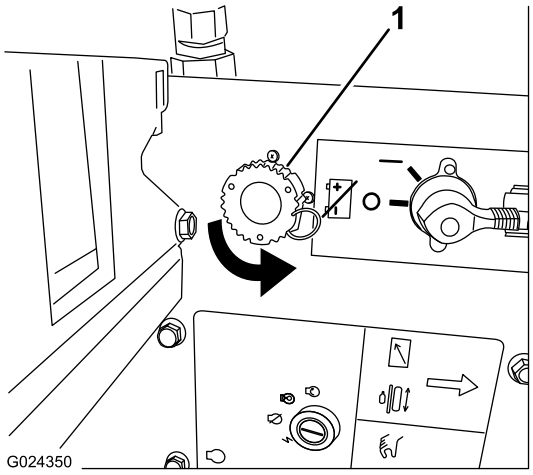

Figure 4

1. Dust cap (DD4045 rear battery compartment)

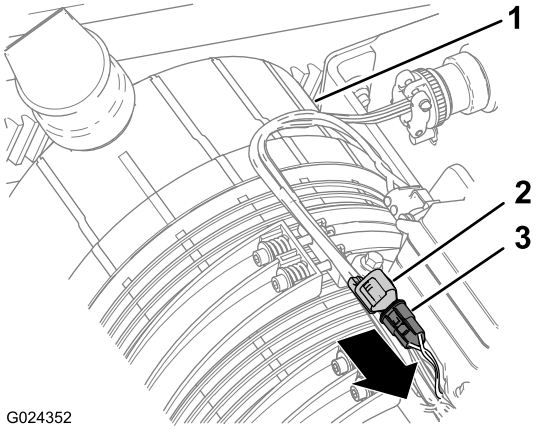

Figure 5

1. Dust cap (directional-drills except the DD4045 under the engine hood)

5. Connect the adapter harness to the diagnostic-port connector for the machine as follows:
   - For a machine with a 3-socket diagnostic-port connector, connect it as follows:
     A. Align the tab on the adapter-harness plug to the latch of the diagnostic port (Figure 6).

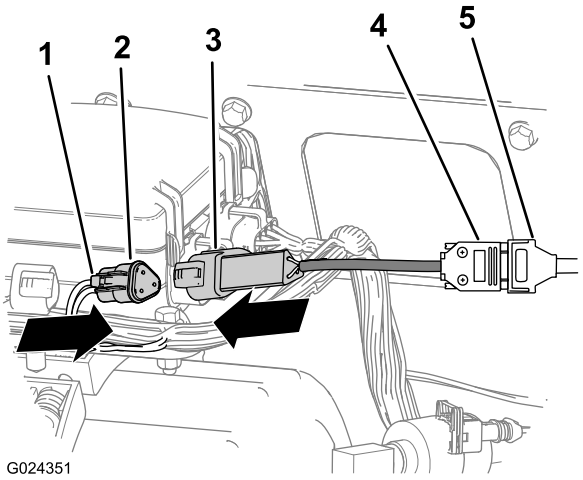

Figure 6

1. Latch
2. Diagnostic-port connector
3. Adapter-harness plug (3 pin)
4. Connector (3-pin adapter cable)
5. Connector (diagnostic cable)

     B. Firmly insert the plug into the port until the latch of the diagnostic-port connector locks (Figure 6).
   - For a machine with a 9-socket diagnostic-port connector, connect it as follows:
     A. Align the pin notch on the diagnostic-port to the pin notch on the adapter-harness plug (Figure 7).

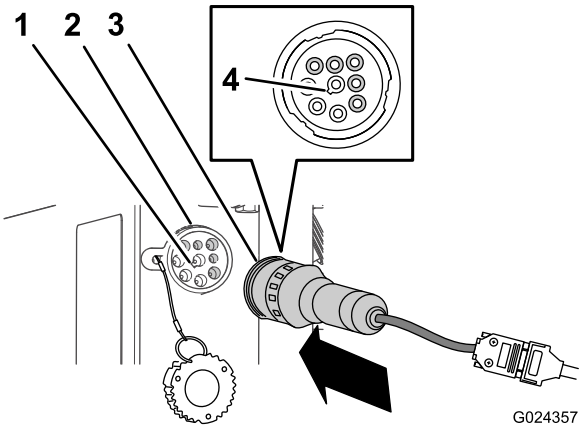

Figure 7

1. Pin notch (diagnostic-port)
2. Diagnostic-port connector (9-socket)
3. Adapter-harness plug (9-pin)
4. Socket notch (adapter-harness plug)

     B. Firmly insert the plug into the port (Figure 7).
6. Insert the USB connector of the diagnostic cable into the USB port on the computer.

   Note: When the diagnostic cable is plugged into the computer and the computer is running, the PWR

indicator light on the housing of the diagnostic cable illuminates (Figure 8).

Note: When the adapter cable is connected to the diagnostic port of the machine and the diagnostic cable, and the control system of the machine is energized, the CAN indicator light on the housing of the diagnostic cable will illuminate (Figure 8).

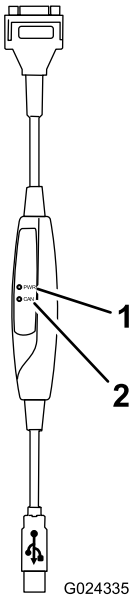

Figure 8

1. PWR indicator light
2. CAN indicator light

7. Turn the master and ignition key switch to the on position.

   Note: Turn the master switch and ignition key switch off prior to disconnecting the diagnostic cable from the port.

Running the Diagnostic Software

Contact a Toro Technical Service representative for instructions on how to use the diagnostic software on your machine.