Form No. 3379-725 Rev B

24V Battery Charger

Model No. 88503—Serial No. 314000001 and Up
Model No. 88504—Serial No. 314000001 and Up
Model No. 88506—Serial No. 314000001 and Up

Operator's Manual

Safety

⚠ WARNING

CALIFORNIA
Proposition 65 Warning

This product contains a chemical or chemicals known to the State of California to cause cancer, birth defects, or reproductive harm.

Important safety instructions—Save these instructions.

⚠ DANGER

To reduce the risk of fire or electric shock, carefully follow these instructions:

1. **Be sure voltage selector is in correct voltage position before plugging in.**
2. **For use in the U.S.A., the voltage selector switch must be placed in the 120 volt position. For use in countries other than the U.S.A., the voltage selector may need to be placed in other than the 120 volt position. Confirm the voltage available at each country location before using the product.**
3. **For connection to a supply not in the U.S.A., use an attachment plug adapter of the proper configuration for the power outlet, if needed.**

⚠ CAUTION

The battery used in this device may present a risk of fire or chemical burn if mistreated.

Do not disassemble, heat above 104 degrees F (40 degrees C), or incinerate. Replace battery with Toro genuine batteries only. Use of another battery may present a risk of fire or explosion.

⚠ CAUTION

Dispose of a used battery promptly. Keep away from children. Do not disassemble and do not dispose of in fire.

⚠ CAUTION

Overheating batteries can cause fire and severe burns.

Do not open, crush, heat above 104 degrees F (40 degrees C), or incinerate. Follow the manufacturer's instructions.

This power unit is intended to be correctly orientated in a vertical or floor mounted position.

© 2013—The Toro® Company
8111 Lyndale Avenue South
Bloomington, MN 55420

Register at www.Toro.com.

Original Instructions (EN)
Printed in China
All Rights Reserved

3379-725 B

Safety and Instructional Decals

Important: Safety and instruction decals are located near areas of potential danger. Replace damaged decals.



121–7606



125–3226



121–7692

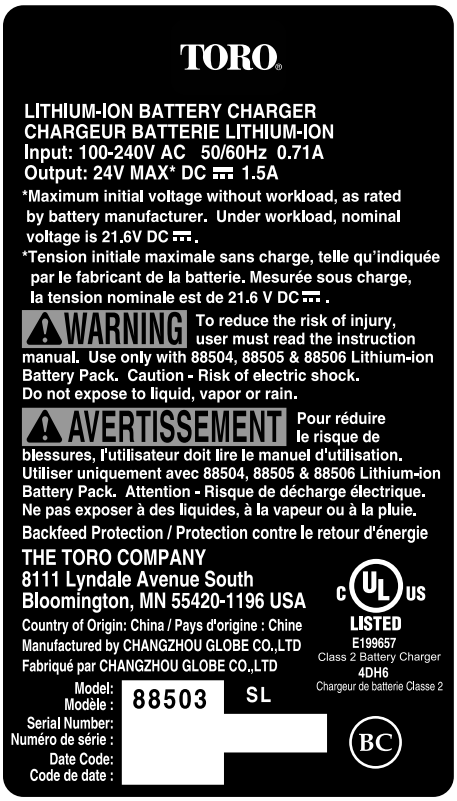

121–7602

Charging the Battery Pack

1. Turn the battery upside down and line up the battery terminal with the slot in the charger (Figure 1 and Figure 2).

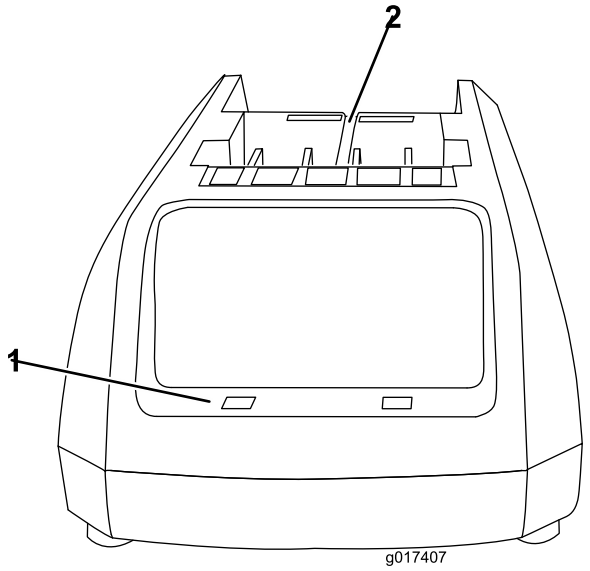

Figure 1

1. LED indicators
2. Insert battery here

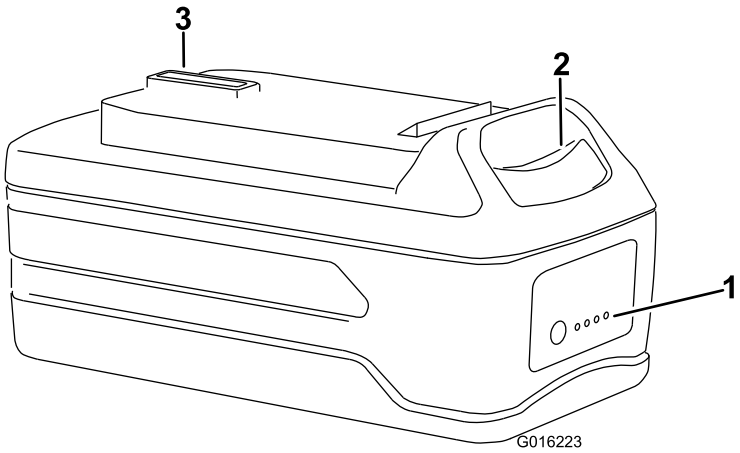

Figure 2

1. LED indicators (level of charge)
2. Release button
3. Battery terminal

2. Slide the battery into the charger until it clicks into place.
3. To remove the battery, press down on the release button and slide the battery backwards out of the charger.
4. Refer to the table below to interpret the LED indicators on the battery charger.

LED COLOR		
Left	Right	Indicates:
Red	Red	Battery is charging
Red	Green	Fully charged
Red	Orange	Battery is too warm: Remove for approximately 30 minutes

Inserting the Battery into the Trimmer

1. Align the tongue of the battery pack with the cavity in the handle housing (Figure 3).

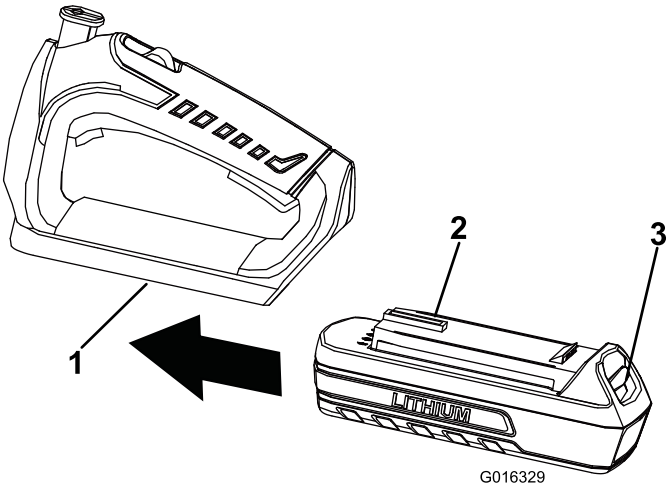

Figure 3

Hedge trimmer handle shown

1. Cavity
2. Tongue
3. Latch

2. Grasp the trimmer handle.
3. Push the battery pack into the handle until the latch locks into place.

Important: The battery pack is not fully charged when it is purchased. Before using the trimmer for the first time, place the battery pack in the charger and charge it until the LED indicators turn green. Make sure to read all safety precautions. With regular use, it will need shorter charging time. If storing for a prolonged period of time, remove the battery. When ready to use again, charge the battery pack until the LED indicators turn green.

Battery Pack Preparation For Recycling

⚠ WARNING

Upon removal, cover the battery pack's terminals with heavy-duty adhesive tape. Do not attempt to destroy or disassemble the battery pack or remove any of its components. Lithium-ion batteries must be recycled or disposed of properly at the nearest battery recycling facility.

Troubleshooting

Using the battery when it is hot can reduce the operating time. The battery will automatically stop working when it is overheated to prevent damage to it. Remove the battery from the charger and allow it to cool before placing it back into the trimmer.

Using the battery when there is moisture on the leads can cause the trimmer to malfunction. Allow the battery to dry or wipe it dry before placing it back into the trimmer.

Notes:

Notes:

Notes:

The Toro Promise - Electric Products

A Two-Year Full Warranty for Residential Use for the United States and Canada

The Toro Company and its affiliate, Toro Warranty Company, pursuant to an agreement between them, jointly warrant this product for two years against defects in material or workmanship when used for normal residential purposes.*

If you think your Toro Product contains a defect in materials or workmanship, if you have questions or problems, and before returning this product call toll free:

Trimmers:	**Blowers:**	**Snowthrowers:**
1-800-237-2654 (US) 1-800-248-3258 (Canada)	1-888-367-6631 (US) 1-888-430-1687 (Canada)	1-800-808-2963 (US) 1-800-808-3072 (Canada)

To receive a replacement or repair, at our option, return the complete unit to the seller. United States and Canada customers may return their product, with proof of purchase, to any Authorized Service Dealer. United States customers may also return their product, with proof of purchase, postage prepaid, to the Toro Service Center, 5500 SE Delaware, Ankeny, IA 50021.

This warranty covers product defects only. **Neither The Toro Company nor Toro Warranty Company is liable for indirect, incidental, or consequential damages in connection with the use of the Toro Products covered by this warranty, including any cost or expense of providing substitute equipment or service during reasonable periods of malfunction or non-use pending completion of repairs under this warranty. Some states do not allow exclusions of incidental or consequential damages, so the above exclusions may not apply to you.** This warranty gives you specific legal rights, and you may also have other rights which vary from state to state.

Countries Other than the United States and Canada

Customers who have purchased Toro products exported from the United States or Canada should contact their Toro Distributor (Dealer) to obtain guarantee policies for your country, province, or state. If for any reason you are dissatisfied with your Distributor's service or have difficulty obtaining guarantee information, contact the Toro importer. If all other remedies fail, you may contact us at Toro Warranty Company.

Australian Consumer Law

Australian customers will find details relating to the Australian Consumer Law either inside the box or at your local Toro Dealer.

* Residential use means use of the product on the same lot as your home.

Part Number 374-0262 Rev. E