Form No. 3383-470 Rev A

Electric Bed Lift Kit

2014 and After Workman® MD/MDX/MDX-D Utility Vehicle

Model No. 07389—Serial No. 314000001 and Up

Installation Instructions

Safety

⚠ WARNING

CALIFORNIA
Proposition 65 Warning

This product contains a chemical or chemicals known to the State of California to cause cancer, birth defects, or reproductive harm.

Safety and Instructional Decals

Safety decals and instructions are easily visible to the operator and are located near any area of potential danger. Replace any decal that is damaged or lost.

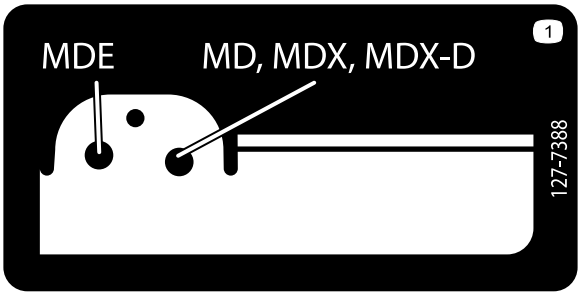

127-7388

1. Pin location

© 2014—The Toro® Company
8111 Lyndale Avenue South
Bloomington, MN 55420

Register at www.Toro.com.

CE

Original Instructions (EN)
Printed in the USA
All Rights Reserved

3383-470 A

Installation

Loose Parts

Use the chart below to verify that all parts have been shipped.

Procedure	Description	Qty.	Use
1	No parts required	–	Prepare the machine.
2	Outboard-lift bracket (short flanges) Inboard-lift bracket (long flanges) Hex-head bolt (5/16 x 5-1/2 inch) Flange nut (5/16)	1 1 1	Install the bed bracket.
3	Switch Fuse—15 amp	1 1	Install the switch.
4	Lift actuator Clevis pin (3-1/2 inch) Clevis pin (2-1/4 inch) Hairpin Hex-head bolt (1/2 x 5-1/2 inch) Locknut (1/2 inch)	1 1 1 2 1 1	Install the lift actuator.
5	No parts required	–	Remove the prop rod.

Note: Determine the left and right sides of the machine from the normal operating position.

1

Preparing the Machine

No Parts Required

Procedure

1. Move the machine to a level surface, set the parking brake, turn the ignition off, and remove the key.

⚠ WARNING

If you leave the key in the ignition switch, someone could accidently start the machine and seriously injure you or other bystanders.

Remove the key from the ignition switch before you do any maintenance.

2. Lift the lever on either side of the box and lift the box up (Figure 1).

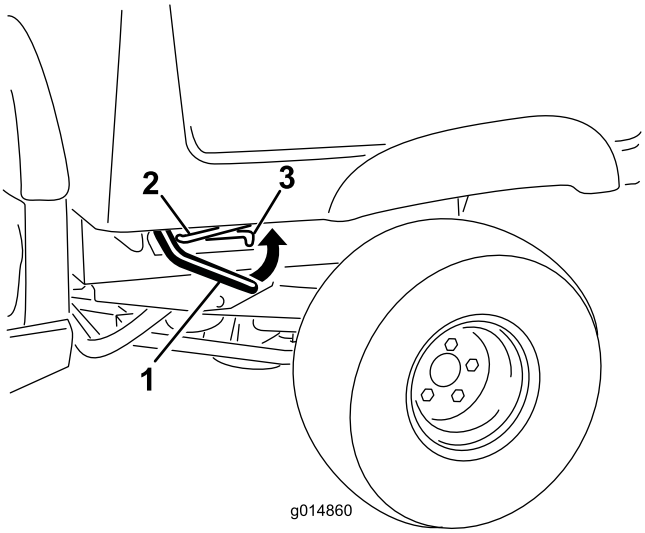

Figure 1

1. Lever
2. Prop rod
3. Detent slot

3. Pull the prop rod into the detent slot, securing the box (Figure 1).

⚠ WARNING

A raised box could fall and injure persons that are working beneath it.

- **Always use the prop rod to hold the box up before working under the box.**
- **Remove any load material from the box before raising it.**

4. Remove the 4 flange nuts securing the latch-rod brackets to the underside of the box (Figure 2).

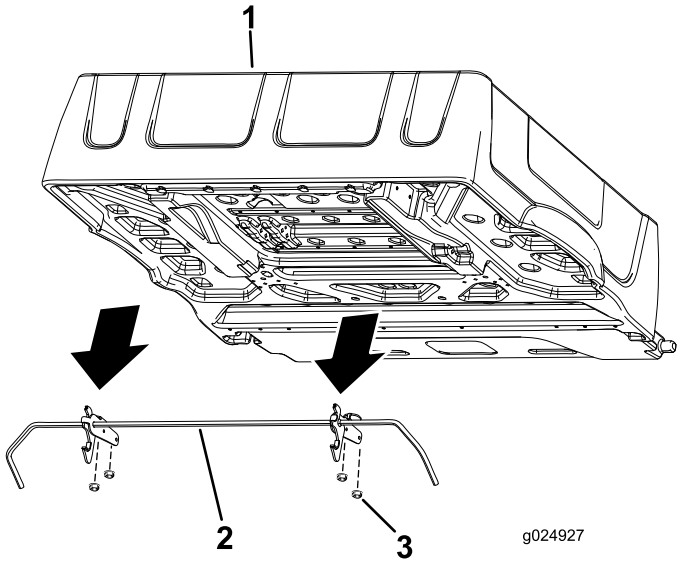

Figure 2

1. Box
2. Latch rod
3. Flange nut

5. Remove and save the latch rod and latches.

2

Installing the Bed-lift Brackets

Parts needed for this procedure:

1	Outboard-lift bracket (short flanges)
	Inboard-lift bracket (long flanges)
1	Hex-head bolt (5/16 x 5-1/2 inch)
1	Flange nut (5/16)

Procedure

Perform the bed bracket installation at the bottom side of the bed.

1. Remove the 2 left-most bolts (5/16 x 3/4 inch) that secure upper-bed brace to the bed (Figure 3).

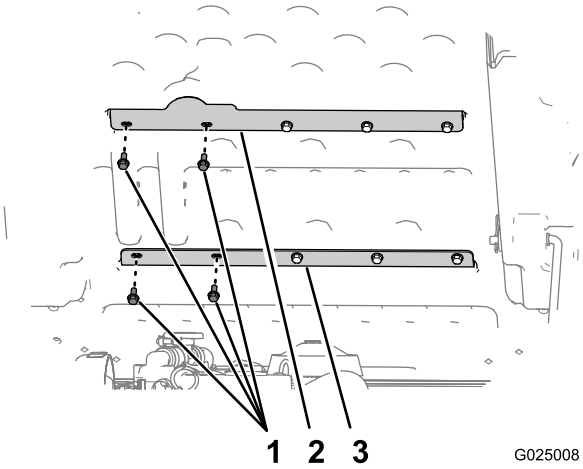

Figure 3

1. Bolts (5/16 x 3/4 inch)
2. Upper-bed brace
3. Lower-bed brace

2. Remove the 2 left-most bolts (5/16 x 3/4 inch) that secure lower-bed brace to the bed (Figure 3).

   Note: Retain the 4 bolts for installation.

3. Align the left outboard-lift bracket (the bracket with the short flanges) to the outboard holes in the upper- and lower-bed braces (Figure 4).

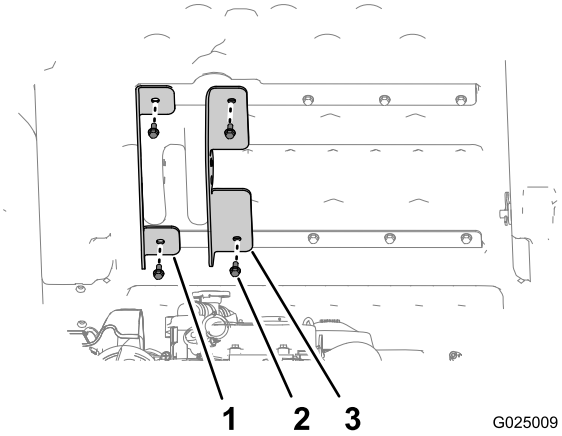

Figure 4

1. Outboard-lift bracket (short flanges)
2. Bolts (5/16 x 3/4 inch)
3. Inboard-lift bracket (long flanges)

4. Secure the outboard-lift bracket to the bed with the 2 bolts that you removed in step1, and tighten the bolts hand tight (Figure 4).
5. Align the inboard-lift bracket (the bracket with the long flanges) to the inboard holes in the upper- and lower-bed braces (Figure 4).
6. Secure the inboard-lift bracket to the bed with the 2 bolts that you removed in step 2 , and tighten the bolts hand tight (Figure 4).
7. Insert the hex-head bolt (5/16 x 5-1/2 inch) through hole 7/9 mm (5/16 inch) in the inboard-lift bracket

(long flanges), bed structure, and the outboard bed-lift bracket (short flanges) as shown in Figure 5.

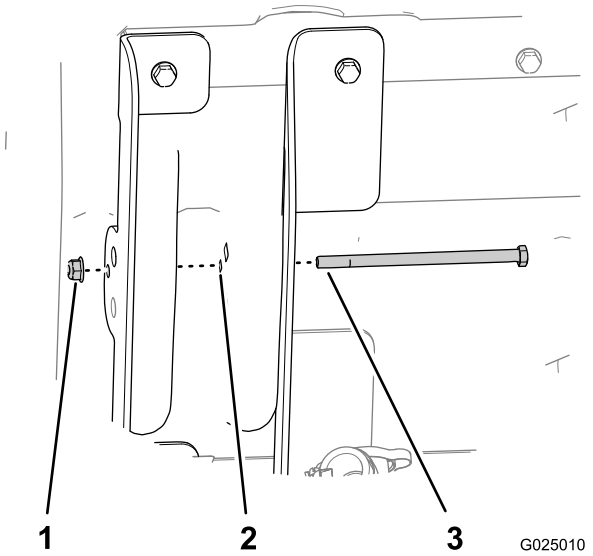

Figure 5

1. Locknuts (5/16 inch)
2. Hole 7/9 mm (5/16 inch)
3. Hex-head bolt (5/16 x 5-1/2 inch)

8. Secure the bolt with the flange nut (5/16 inch) hand tight (Figure 5).

3

Installing the Switch

Parts needed for this procedure:

1	Switch
1	Fuse—15 amp

Procedure

1. Disconnect the negative-battery terminal from the battery.
2. Remove the plug from the dash panel, to the right of the steering column and above the key switch (Figure 6).

   Note: If the hole in the dash is in use, measure over 13 mm (1/2 inch) and cut another 21 x 35 mm (0.84 x 1.46 inches) rectangular opening in the dash. Make sure not to damage any existing components behind the dash when cutting the hole.

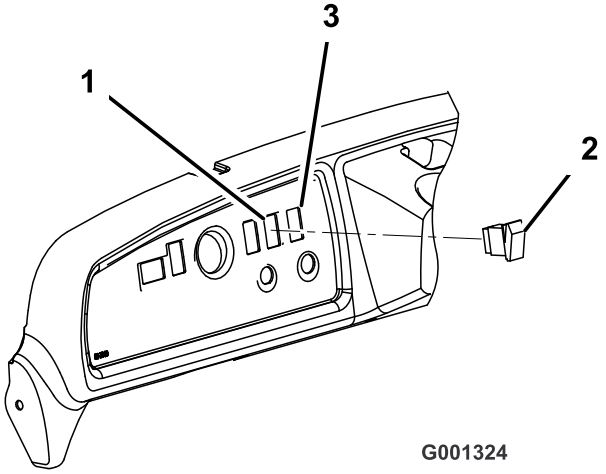

Figure 6

1. Plugged hole
2. Bed-lift switch
3. Cut the new hole (if required).

3. Plug the bed-lift switch into the harness connector in the dash.

   Note: Do not install the switch

4. Install a new thermal fuse (15 amp) into the open slot in the fuse block.

4

Installing the Lift Actuator

Parts needed for this procedure:

1	Lift actuator
1	Clevis pin (3-1/2 inch)
1	Clevis pin (2-1/4 inch)
2	Hairpin
1	Hex-head bolt (1/2 x 5-1/2 inch)
1	Locknut (1/2 inch)

Procedure

1. Align the hole in the lower-mount point for the lift actuator with the holes in the chassis-mount brackets.

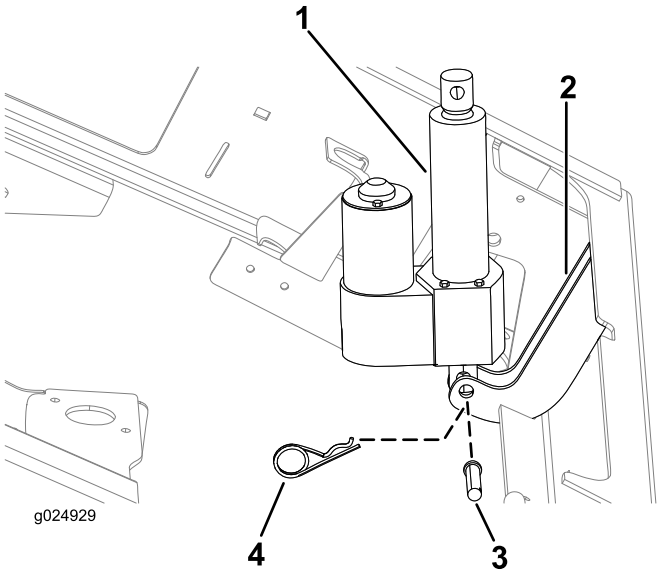

Figure 7

1. Lift actuator
2. Chassis-mount brackets
3. Clevis pin (2-1/4 inch)
4. Hairpin

2. Secure the lift actuator to the chassis-mount brackets with the clevis pin (2-1/4 inch) and hair pin.
3. Connect the 2 socket-electrical connector of the rear-wiring harness of the machine to the 2 pin connector of the lift actuator (Figure 8).

   Note: The 2 socket-electrical connector of the rear-wiring harness is located adjacent to the electrical-control cover.

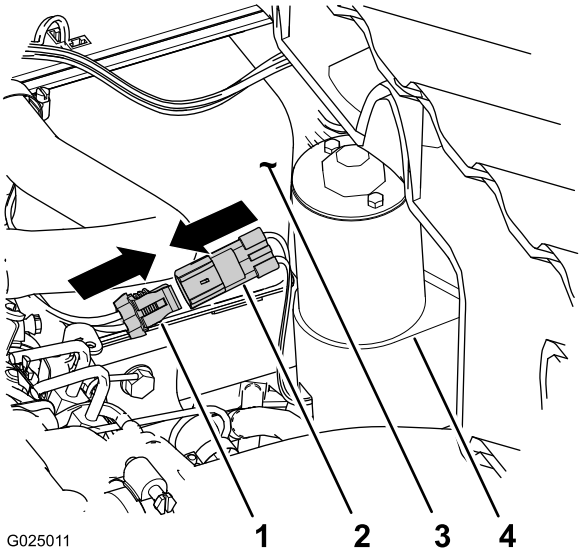

Figure 8

1. 2 socket-electrical connector (rear-wiring harness)
2. 2 pin connector (lift actuator)
3. electrical-control cover
4. Lift actuator

4. Connect the negative-battery terminal to the battery.
5. Press the up-paddle of the bed-lift switch to extend the actuator (Figure 6).

   Note: If the lift actuator does not extend, press the other paddle of the switch

6. Align the up-paddle to the 12 o'clock position and insert the bed-lift switch into the opening in the dash (Figure 6).

   Note: The switch should snap and lock into position

7. Press the up paddle the bed-lift switch to extend the rod of the lift actuator rod until the hole in the rod is aligns with the holes in the inboard and outboard-lift brackets (Figure 9).

   Note: Select the set of holes in the bracket for the gasoline and diesel machines; refer to Safety and Instructional Decals (page 1) for the hole locations for this machine.

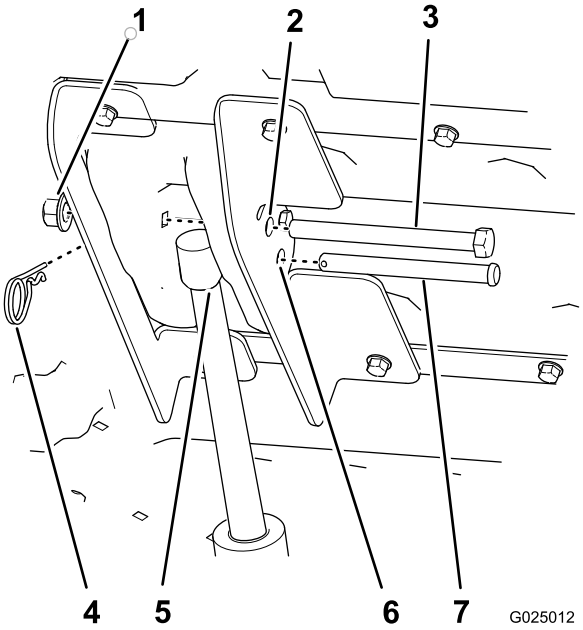

Figure 9

1. Lock nut (1/2 inch)
2. 12.7 mm (1/2 inch) hole for the hex-head bolt
3. Hex-head bolt (1/2 x 5-1/2 inch)
4. Hair pin
5. Lift-actuator rod
6. 12.7 mm (1/2 inch) hole for the clevis pin
7. Clevis pin (3-1/2 inch)

8. Secure the lift-actuator rod to the lift brackets with clevis pin (3-1/2 inch) and hairpin (Figure 9).

   Note: Tighten the locknut and flange nut until they are snug.

9. Tighten the 4 bolts (5/16 x 3/4 inch) that secure the inboard and outboard-lift brackets to the bed (Figure 4) to 15 to 16.6 N-m (133 to 147 in-lb).
10. Align the hex-head bolt (1/2 x 5-1/2 inch) through the remaining 12.7 mm (1/2 inch) holes in the inboard and

outboard-lift brackets (Figure 9) and secure it with a nut (1/2 inch) until the flange nut is snug.

11. Tighten the flange nut that secure the bolt (5/16 inch) it is snug (Figure 5).

5

Removing the Prop Rod

No Parts Required

Procedure

1. Remove the hairpin and washer that secure the prop rod to the bottom of the bed (Figure 10).

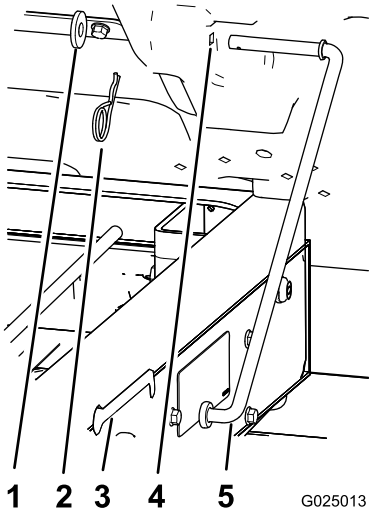

Figure 10

1. Washer
2. Hairpin
3. Slot (frame)
4. Bed hole
5. Prop rod

2. Slide the prop rod forward to remove it from the bracket on the frame (Figure 10).

   Note: Retain the prop rod components for future use.

   Note: If the electric box lift is ever removed, install the prop rod and latch rod again, using the existing fasteners and the prop-rod bracket.

Operation

⚠ WARNING

Driving the machine with the cargo box raised may cause the machine to tip or roll more easily. The box structure may become damaged if the box is raised for an extended period of time while operating the machine.

- **Only operate the machine when the cargo box is down.**
- **After a load has been dumped, lower the cargo box.**

⚠ CAUTION

The weight of the box may be heavy. Hands or other body parts could be crushed.

Keep hands and other body parts clear when lowering the box.

Raising the Bed

1. Turn the ignition key to the On position.
2. Push the top of the switch to raise the box.

   Important: When a ratcheting noise is heard, the box lift is completely extended or retracted. Do not continue pressing the switch.

Lowering the Bed

Push the bottom of the switch to lower the box.

Important: When a ratcheting noise is heard, the box lift is completely extended or retracted. Do not continue pressing the switch.

Note: The actuator may cause slight deformation to the bed after it is fully lowered and before the actuator clutch engages. Release the switch when a ratcheting noise is heard.

Maintenance

Servicing the Air Cleaner on the Workman MDX-D

To remove the air cleaner filter element from the air cleaner, as follows:

1. Support the bed with lifting equipment.
2. Remove the hair pin cotter and clevis pin securing the actuator rod to the inboard and outboard-lift brackets (Figure 9).
3. Tip the box all the way up.
4. Rotate the actuator forward.
5. Remove the air cleaner and service it as required; refer to the *Operator's Manual* for the machine.
6. Install the air cleaner ; refer to the *Operator's Manual* for the machine.
7. Lower the box and align the lift actuator to the lift brackets (Figure 9).
8. Secure the lift actuator to the lift brackets with the clevis pin and hairpin (Figure 9).

TORO®

Count on it.