Form No. 3383-608 Rev A

TORO®

Count on it.

Operator's Manual

RP-1200D and RP-1400D Reversible Plate Compactor

Model No. 68074—Serial No. 313000001 and Up
Model No. 68075—Serial No. 313000001 and Up

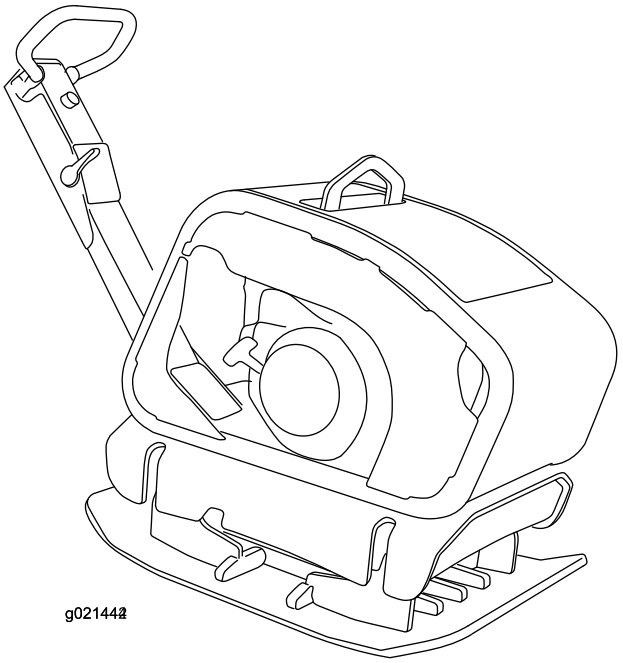

g021442

Register at www.Toro.com.
Original Instructions (EN)

3383-608 A

Introduction

⚠ WARNING

CALIFORNIA
Proposition 65 Warning

This product contains a chemical or chemicals known to the State of California to cause cancer, birth defects, or reproductive harm.

The engine exhaust from this product contains chemicals known to the State of California to cause cancer, birth defects, or other reproductive harm.

Use of this product may cause exposure to chemicals known to the State of California to cause cancer, birth defects, or other reproductive harm.

Read this information carefully to learn how to operate and maintain your product properly and to avoid injury and product damage. You are responsible for operating the product properly and safely.

You may contact Toro directly at www.Toro.com for product and accessory information, help finding a dealer, or to register your product.

Whenever you need service, genuine Toro parts, or additional information, contact an Authorized Service Dealer or Toro Customer Service and have the model and serial numbers of your product ready. Figure 1 illustrates the location of the model and serial numbers on the product. Write the numbers in the space provided.

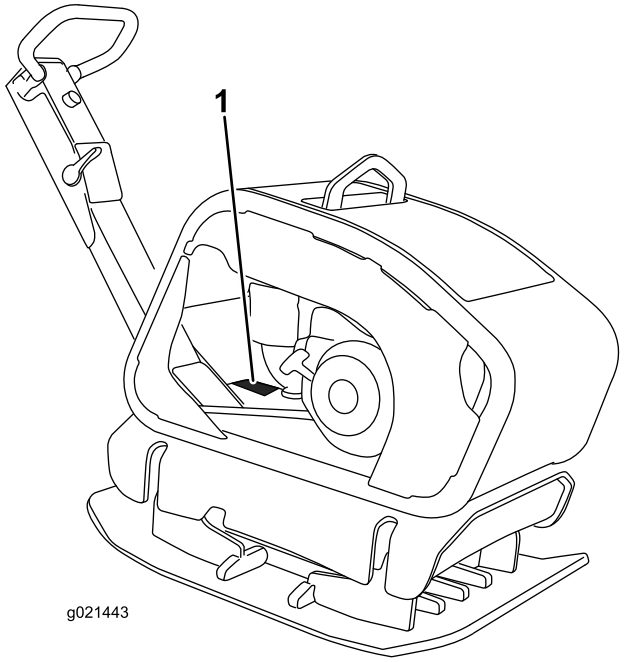

Figure 1

Model No. _____

Serial No. _____

This manual identifies potential hazards and has safety messages identified by the safety alert symbol (Figure 2), which signals a hazard that may cause serious injury or death if you do not follow the recommended precautions.



Figure 2

1. Safety alert symbol

This manual uses 2 words to highlight information. **Important** calls attention to special mechanical information and **Note** emphasizes general information worthy of special attention.

© 2014—The Toro® Company
8111 Lyndale Avenue South
Bloomington, MN 55420

Contact us at www.Toro.com.
Printed in the USA
All Rights Reserved

Contents

Introduction 2
Safety 3
Safe Operating Practices 3
Safety and Instructional Decals 5
Setup 7
Checking the Engine-Oil Level 7
Checking the Eccentric-Oil Level 7
Product Overview 7
Controls 8
Specifications 8
Operation 8
Checking the Engine-Oil Level 8
Checking the Water Trap 9
Cleaning Debris from the Machine 9
Adding Fuel 10
Starting and Stopping the Engine 11
Operating the Compactor 12
Transporting the Machine 12
Maintenance 13
Recommended Maintenance Schedule(s) 13
Servicing the Air Cleaner 13
Replacing the Fuel Filter 14
Servicing the Engine Oil 15
Servicing the Eccentric Oil 16
Servicing the Battery (Model 68075 only) 17
Servicing the Belt 18
Storage 19
Troubleshooting 20

Safety

Improper use or maintenance by the operator or owner can result in injury. To reduce the potential for injury, comply with these safety instructions and always pay attention to the safety alert symbol, which means *Caution*, *Warning*, or *Danger*—personal safety instruction. Failure to comply with the instruction may result in personal injury or death.

Safe Operating Practices

This product is capable of crushing or amputating hands and feet. Always follow all safety instructions to avoid serious injury or death.

⚠ WARNING

Engine exhaust contains carbon monoxide, and odorless, deadly poison that can kill you

Do not run the engine indoors or in an enclosed area.

Training

- Read the *Operator's Manual* and other training material. If the operator(s) or mechanic(s) cannot read English, it is the owner's responsibility to explain this material to them.
- Become familiar with the safe operation of the equipment, operator controls, and safety signs.
- All operators and mechanics should be trained. The owner is responsible for training the users.
- Never let children or untrained people operate or service the equipment. Local regulations may restrict the age of the operator.
- The owner/user can prevent and is responsible for accidents or injuries occurring to himself or herself, other people or property.

Preparation

- Evaluate the terrain to determine the proper and safe actions to perform the job. Only use accessories and attachments approved by the manufacturer.
- Wear appropriate clothing including hard hat, safety glasses, long pants, safety shoes, and hearing protection. Long hair, loose clothing or jewelry may get tangled in moving parts.
- Inspect the area where the equipment is to be used and remove all objects such as tools, building materials, and personal items which can be damaged by the machine.
- Use extra care when handling fuels. They are flammable and vapors are explosive.
  - Use only an approved container
  - Never remove the fuel cap or add fuel with the engine running. Allow the engine to cool before refueling. Do not smoke.

  - Never refuel or drain the machine indoors.
- Check that the operator's presence controls, safety switches, and shields are attached and functioning properly. Do not operate unless they are functioning properly.

Operation

- Never run an engine in an enclosed area.
- Only operate in good light, keeping away from holes and hidden hazards.
- Do not operate in standing water.
- Ensure that the area is clear of other people before operating the machine. Stop the machine if anyone enters the area.
- Keep pets and bystanders away.
- Keep feet clear of the plate compactor.
- Ear protection is required when operating this equipment.
- Do not operate the machine under the influence of alcohol or drugs.
- For foot protection, wear steel toe shoes or toe pads.
- Never operate with the guards not securely in place. Be sure all interlocks are attached, adjusted properly, and functioning property.
- Do not change the engine governor setting or overspeed the engine.
- Use care when loading or unloading the machine into a trailer or truck.
- Never leave the machine running unattended. Always set the throttle to slow, stop the engine, and wait for all moving parts to stop before leaving.
- Do not touch parts which may be hot from operation. Allow them to cool before attempting to maintain, adjust, or service.
- Before compacting soil, have the area marked for underground utilities.
- Lightning can cause severe injury or death. If lightning is seen or thunder is heard in the area, do not operate the machine; seek shelter.

Maintenance and Storage

- Park the machine on a level surface, set the throttle to slow, and stop the engine. Wait for all movement to stop before adjusting, cleaning, or repairing.
- Clean debris from the drives, mufflers, and engine to help prevent fires. Clean up fuel and oil spillage.
- Let the engine cool before storing and do not store near flame.
- Do not store fuel near flames or drain indoors.
- Park the machine on level ground. Never allow untrained personnel to service the machine.
- Carefully release pressure from components with stored energy.
- Keep hands and feet away from moving parts. If possible, do not make adjustments with the engine running.
- Keep all parts in good working condition and all hardware tightened. Replace all worn or damaged decals.
- Keep nuts and bolts tight. Keep equipment in good condition.
- Keep the machine free from the build-up of mud, rocks, or other debris. Clean up oil or fuel spillage. Allow the machine to cool before storing.
- Use extra care when handling fuels. They are flammable and vapors are explosive.
  - Use only an approved container.
  - Never remove the fuel cap or add fuel when the engine is running. Allow the engine to cool before refueling. Do not smoke.
  - Never refuel the machine indoors.
  - Never store the machine or fuel container inside where there is an open flame, such as near a water heater or furnace.
  - Never fill a fuel container while it is inside a vehicle, trunk, pick-up bed, or any surface other than the ground.
  - Keep container nozzle in contact with the tank during filling.
- Stop and inspect the equipment if you strike an object. Make any necessary repairs before restarting.
- To best protect your investment and maintain optimal performance of your Toro equipment, count on Toro genuine parts. When it comes to reliability, Toro delivers replacement parts designed to the exact engineering specifications of our equipment. For peace of mind, insist on Toro genuine parts.

Safety and Instructional Decals

Safety decals and instructions are easily visible to the operator and are located near any area of potential danger. Replace any decal that is damaged or lost.



117–2718



125–8207

1. Engine oil

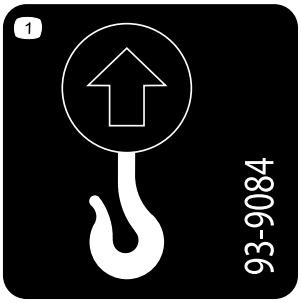

93–9084

1. Lift point

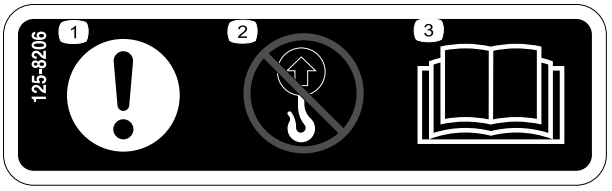

125–8206

1. Caution
2. Do not lift the compactor by the handle.
3. Read the *Operator's Manual* for information on lifting the machine.

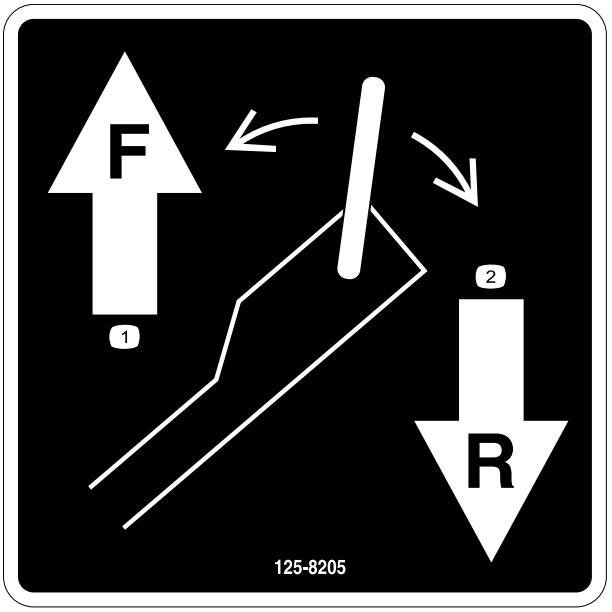

125–8205

1. Push the handle forward to move the compactor forward.
2. Pull the handle backward to move the compactor backward.

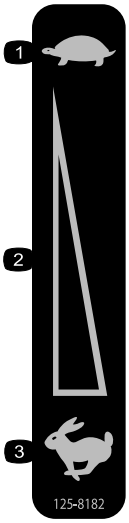

125–8182

1. Slow
2. Variable speed control
3. Fast



125–4963

1. Warning—keep hands away from hot surfaces

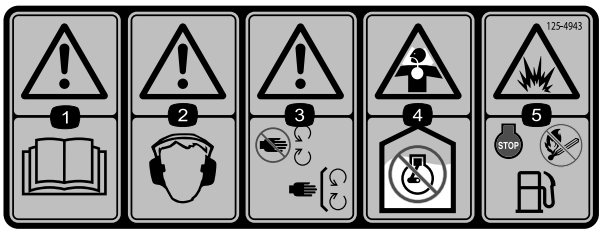

125–4943

1. Warning—read the *Operator's Manual*.
2. Warning—wear hearing protection.
3. Warning—keep away from moving parts; keep all guards and shields in place.
4. Choking hazard—do not operate the machine indoors.
5. Explosion hazard—stop the engine and extinguish all flames before refueling the machine.

Setup

Checking the Engine-Oil Level

The machine comes from the factory with oil in the engine crankcase; however, it may be necessary to add oil. Refer to Checking the Engine-Oil Level (page 8). Add only enough oil to raise the level to the Full mark on the dipstick.

Checking the Eccentric-Oil Level

The machine comes from the factory with eccentric oil in the eccentric housing; however, it may be necessary to add oil. Refer to Checking the Eccentric-Oil Level (page 16). Add only enough oil so that the oil level is flush with the oil plug on the side of the eccentric housing.

Product Overview

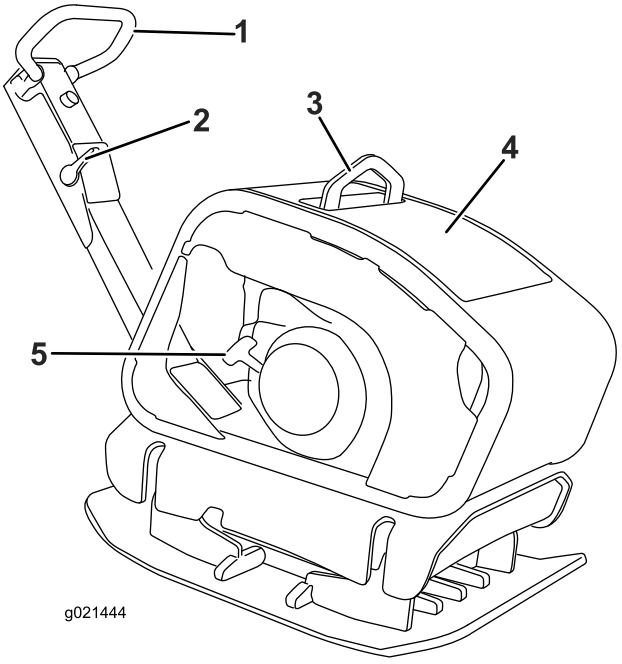

Figure 3

1. Travel-control lever
2. Throttle control
3. Lift point
4. Cover
5. Recoil-start handle

Controls

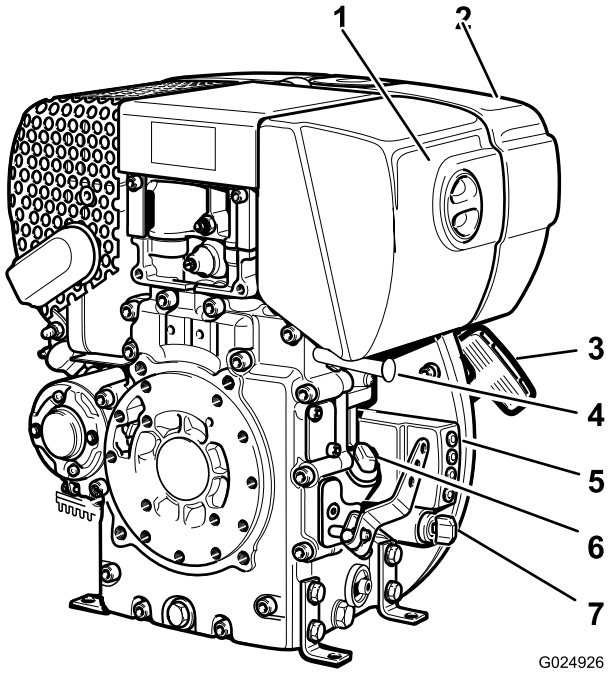

Figure 4

1. Air filter
2. Fuel tank
3. Recoil-start handle
4. Engine-shutoff switch
5. Engine indicator lights (Model 68075 only)
6. Dipstick
7. Start switch (Model 68075 only)

Specifications

Model number	RP-1200D	RP-1400D
Length	142 cm (55.9 inches)	150 cm (59 inches)
Width	60 cm (23.6 inches)	75 cm (29.5 inches)
Height (handle lowered)	106 cm (41.5 inches)	104 cm (40.9 inches)
Height (handle raised)	115 cm (45.3 inches)	113 cm (44.5 inches)
Weight	350 kg (771.6 lb)	440 kg (970 lb)

Operation

Note: Determine the left and right sides of the machine from the normal operating position.

Checking the Engine-Oil Level

Service Interval: Before each use or daily

Oil type: API CD, CE, CF, CF-4, CG-4 or higher

Refer to the table below to determine the correct oil viscosity for the ambient air temperature in which the machine is operated:

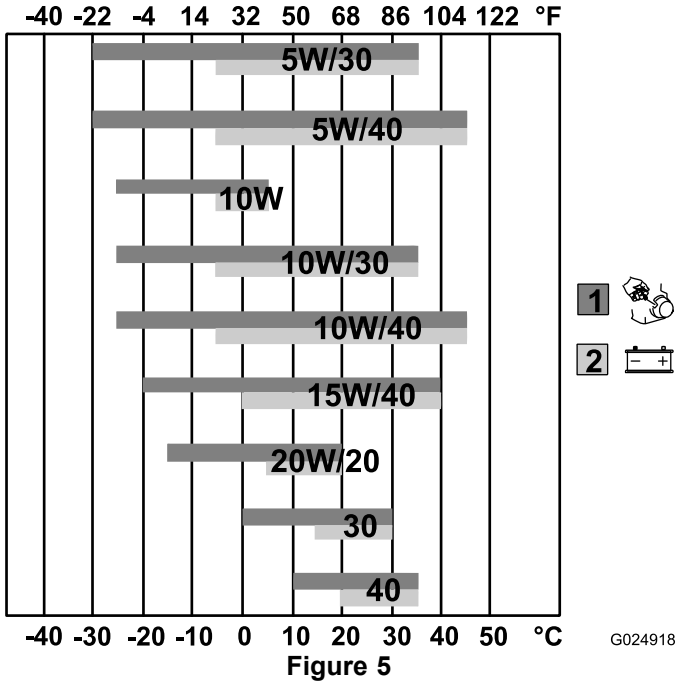

Figure 5

1. Pull-start temperature range
2. Electric-start temperature range

1. Stop the machine on a level surface.
2. Set the throttle to slow, press the red button for the engine-shutoff switch, and wait for all moving parts to stop.
3. Clean around the dipstick (Figure 6) so that dirt cannot fall into the filler hole and damage the engine.

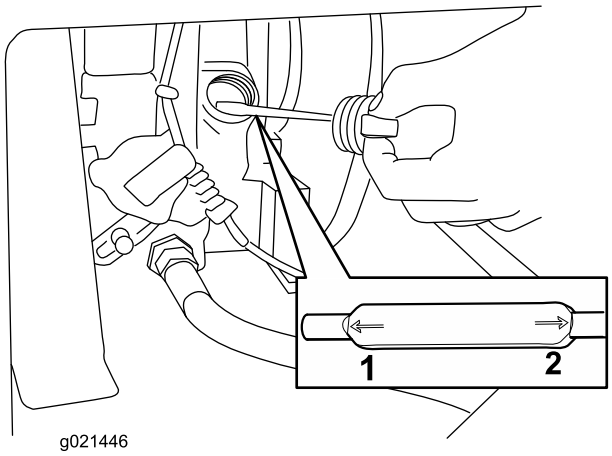

Figure 6

1. Minimum oil level
2. Maximum oil level

4. Unscrew the dipstick and wipe the end clean (Figure 6).
5. Screw the dipstick fully onto the filler tube (Figure 6).
6. Unscrew the dipstick again and look at the end. If the engine oil level is low, slowly pour only enough of the specified oil into the filler tube to raise the level to the Full mark on the dipstick.

   Important: Do not overfill the crankcase with engine oil and run the engine; engine damage may result.

Checking the Water Trap

Service Interval: Before each use or daily

1. Set the throttle to slow, stop the engine, and wait for all moving parts to stop.
2. Loosen the water-trap bolt 3 to 4 rotations (Figure 7).

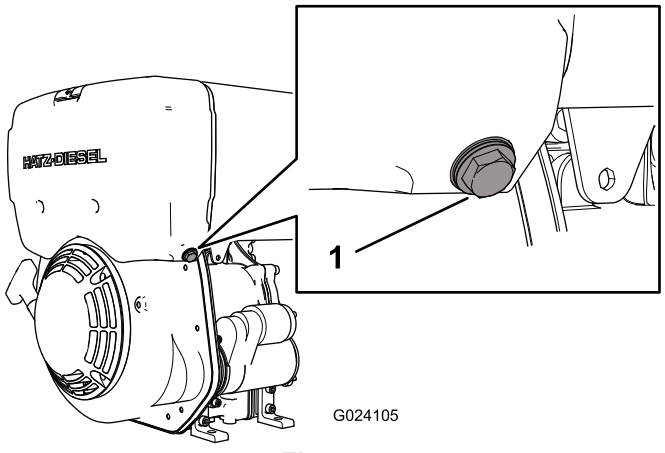

Figure 7

1. Water-trap bolt

3. Use a transparent container to catch the drips from the bolt.

   Note: Because water is denser than diesel fuel, any water that is present will emerge first.

4. As soon as diesel fuel emerges, tighten the water-trap bolt.
5. Dispose of the water and the fuel according to environmental regulations.

Cleaning Debris from the Machine

Service Interval: Before each use or daily

1. Set the throttle to slow, stop the engine, and wait for all moving parts to stop.

   ⚠ WARNING

   Contact with hot parts on the machine can cause severe burns.

   Wait for all parts to cool before touching the machine.

2. Brush dirt and debris away from the air-cleaner housing and engine openings.
3. Check the sprinkler tube and remove any dirt or debris.

Adding Fuel

- The engine runs on clean, fresh ultra-low sulfur diesel fuel with a minimum cetane rating of 40.
- Purchase fuel in quantities that can be used within 30 days to ensure fuel freshness.
- Use summer grade diesel fuel (No. 2-D) at temperatures above -7° C (20° F) and winter grade diesel fuel (No. 1-D) or (No. 1-D/2-D blend) below -7° C (20° F).
- Never mix kerosene, used engine oil, or residual fuels with the diesel fuel.
- Do not store fuel either in the fuel tank or fuel containers over the winter.
- Fuel additives are not recommended. Some fuel additives may cause poor engine performance.

⚠ DANGER

In certain conditions, diesel fuel is extremely flammable and highly explosive. A fire or explosion from diesel can burn you and others and can damage property.

- **Only fill the fuel tank with diesel fuel. Filling the fuel tank with gasoline may result in a fire.**
- **Fill the fuel tank and store fuel in a well-ventilated area.**
- **Never refuel the fuel tank with engine running.**
- **Do not fill the fuel tank completely full. Add fuel until it is at the same level as the red ring. This empty space in the tank allows fuel to expand.**
- **Never smoke when handling diesel, and stay away from an open flame or where diesel may be ignited by a spark.**
- **Store diesel in an approved container and keep it out of the reach of children. Never buy more than a 30-day supply of diesel.**
- **Do not operate without entire exhaust system in place and in proper working condition.**

⚠ WARNING

Diesel is harmful or fatal if swallowed. Long-term exposure to vapors can cause serious injury and illness.

- **Avoid prolonged breathing of vapors.**
- **Keep face away from nozzle and diesel tank or conditioner opening.**
- **Keep diesel away from eyes and skin.**

Diesel Fuel Specifications

Important: Do not mix oil with diesel.

Use ultra-low sulfur diesel fuel that complies with the following specification. The table lists 7 worldwide specifications for diesel fuels.

Diesel Fuel Specifications	Location
No. 2–D, No. 1–D, ASTM D975–94	U.S.A.
EN590:96	European Union
ISO 8217 DMX	International
BS 2869–A1 or A2	United Kingdom
JIS K2204 Grade No.2	Japan
KSM-2610	Korea
GB252	China

Filling the Fuel Tank

Note: Before starting for the first time or if the fuel system is empty, fill the fuel tank fully with diesel fuel. This causes the fuel system to be bled automatically.

Automatic bleeding is completed after a waiting period of 1 to 2 minutes. The engine is ready to start.

1. Park the machine on a level surface, stop the engine, and allow the engine to cool.
2. Lift the cover (Figure 8).

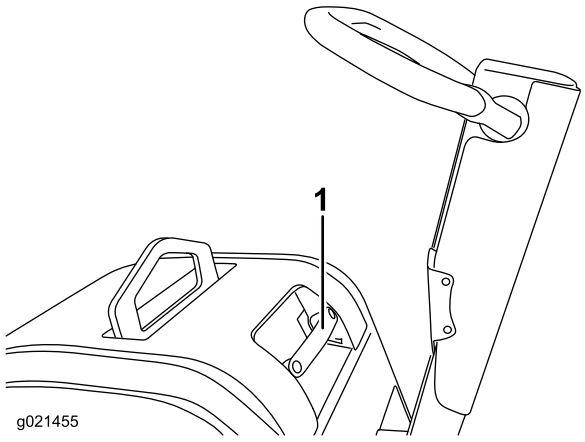

Figure 8

1. Cover handle

3. Clean around the fuel tank cap and remove it (Figure 9).

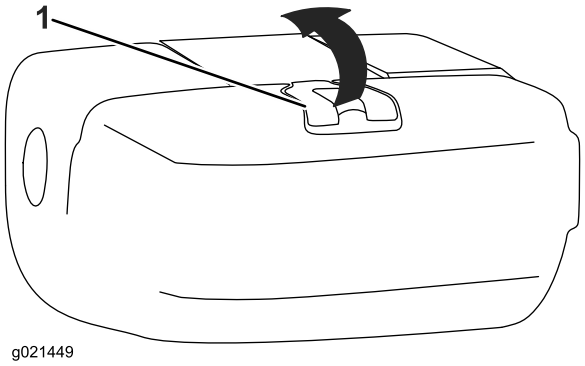

Figure 9

1. Fuel cap
2. Inlet fuel screen
3. Red ring

4. Add diesel to the fuel tank. (Figure 10).

   Important: Do not overfill the fuel tank.

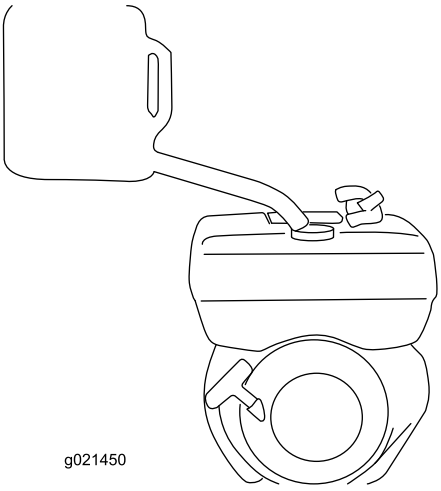

Figure 10

5. Install the fuel-tank cap securely (Figure 9).
6. Wipe up any diesel fuel that may have spilled.
7. Lower the cover.

Starting and Stopping the Engine

Starting the Engine

Model 68074:

1. Set the throttle to the Slow position (Figure 11).

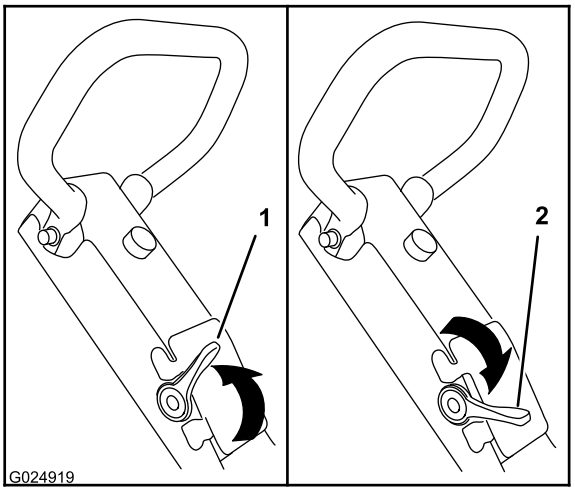

Figure 11

1. Throttle control (slow position)
2. Throttle control (fast position)

2. Slowly pull the recoil-start handle until you encounter a slight resistance (Figure 12).

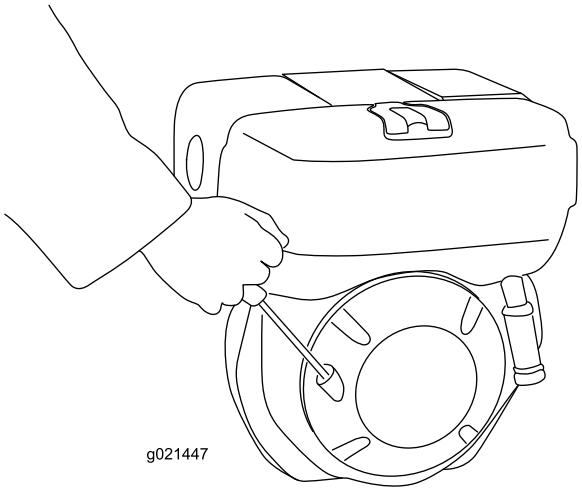

Figure 12

3. Let the rope run back in recoil starter.
4. Hold the recoil-start handle with both hands.
5. Pull the starting rope evenly and with increasing speed until the engine starts.

   Note: Do not sharply pull the recoil-start handle.

6. Move the throttle lever to the fast position (Figure 11).

   Note: The compactor will begin vibrating when the throttle is set to fast throttle.

Model 68075:

1. Set the throttle to the slow position (Figure 11).
2. Insert the key into the starter switch and rotate it clockwise to start the engine (Figure 13).

   Note: Release the key once the engine begins to run.

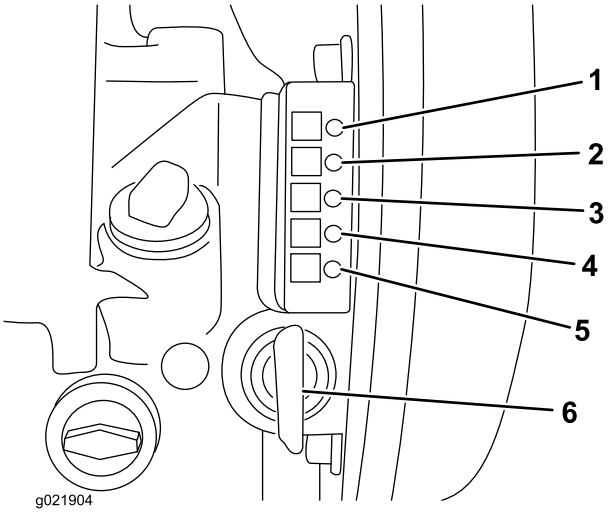

Figure 13

1. Engine-run light
2. Battery-charge light
3. Oil-pressure-warning light
4. Engine-temperature light
5. Engine-preheat light
6. Key

3. Move the throttle lever to the Fast position (Figure 11).

   Note: The compactor will begin vibrating when the throttle is set to fast throttle.

Stopping the Engine

1. Move the throttle-control lever to the Slow position (Figure 11).
2. Push the red button of the engine-shutoff switch for 3 seconds to stop the engine (Figure 14).

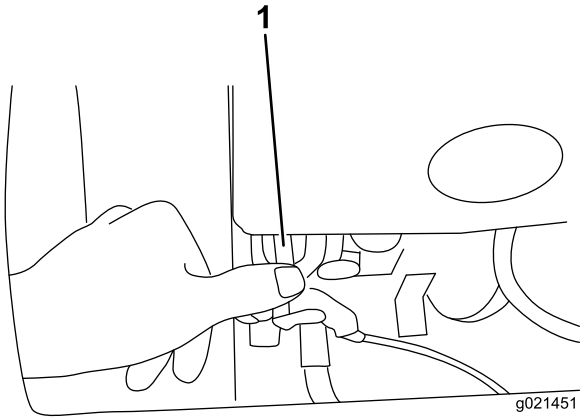

Figure 14

1. Red button

3. **Model 68075 only:** Rotate the key counterclockwise to the Off position (all indicator lamps will turn off) and remove key from the starter switch (Figure 13).

   Note: When the machine is not running, turn the starting key to Off position or else the battery may become fully discharged.

Operating the Compactor

Controlling the Direction of Travel

- Move the travel-control handle forward to drive the machine forward (Figure 15).

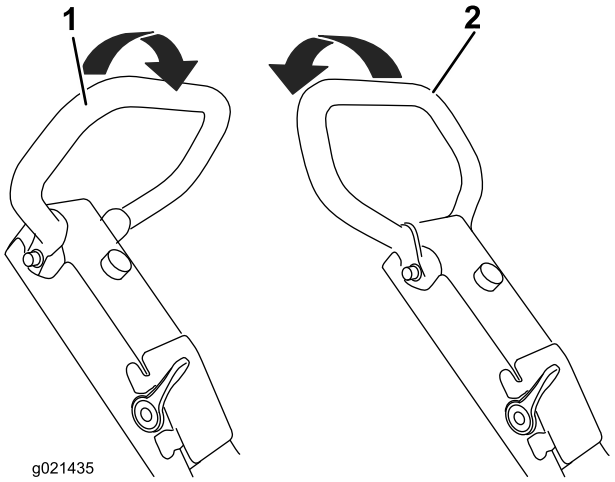

Figure 15

1. Travel-control handle (forward travel position)
2. Travel-control handle (backward travel position)

- Pull the travel travel-control handle backward to drive the machine backward (Figure 15).

Transporting the Machine

Lifting equipment capacity: 440 kg (970 lb)

Use the rollcage lift point to lift and transport the machine with straps or a crane (Figure 16).

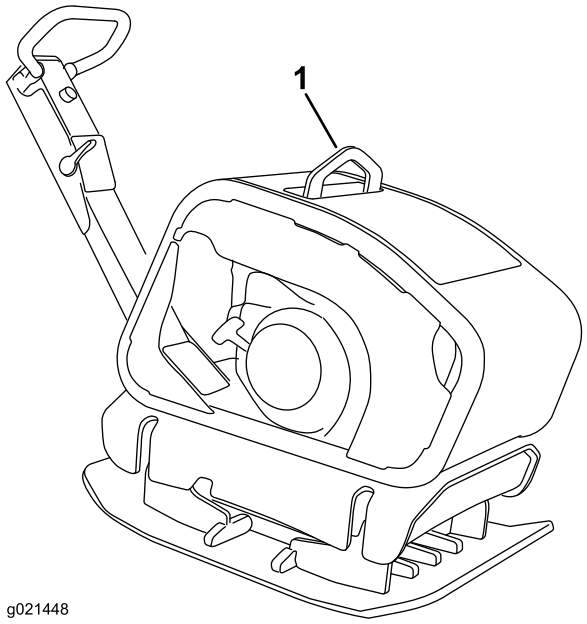

Figure 16

1. Rollcage lift point

Maintenance

Recommended Maintenance Schedule(s)

Maintenance Service Interval	Maintenance Procedure
After the first 25 hours	• Change the engine oil.
Before each use or daily	• Check the engine oil level. • Check the water trap. • Clean debris from the air-cleaner housing. • Inspect the air cleaner element.
Every 50 hours	• Clean the air filter element. Clean it more frequently in dusty operating conditions.
Every 100 hours	• Change the engine oil. • Check the battery cable connections.
Every 300 hours	• Replace the paper air-cleaner element. Replace it more frequently in dusty operating conditions. • Change the eccentric oil.
Every 500 hours	• Replace the fuel filter. • Adjust the belt.
Every 1,000 hours	• Clean the oil filter.
Monthly	• Check the eccentric-oil level.
Yearly	• Change the eccentric oil.

Servicing the Air Cleaner

Service Interval: Before each use or daily—Inspect the air cleaner element.

Every 50 hours—Clean the air filter element. Clean it more frequently in dusty operating conditions.

Every 300 hours/Yearly (whichever comes first)—Replace the paper air-cleaner element. Replace it more frequently in dusty operating conditions.

Important: Do not operate the engine without the air filter assembly; extreme engine damage will occur.

1. Set the throttle to slow, stop the engine, and wait for all moving parts to stop.
2. Unscrew the plastic wing nut and remove the cover (Figure 17).

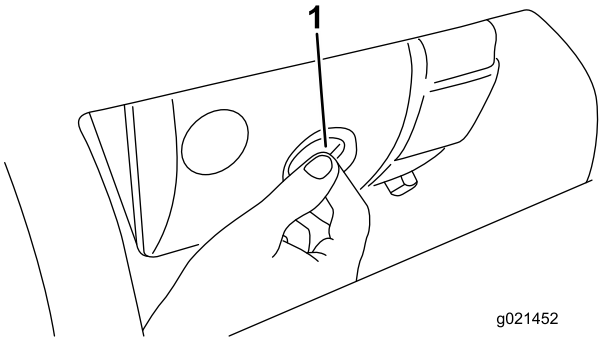

Figure 17

1. Wing nut

3. Unscrew the nut and remove the paper element (Figure 18).

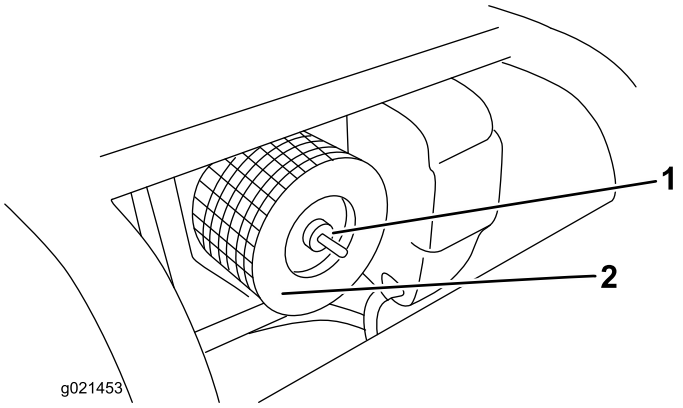

Figure 18

1. Knurled nut
2. Air-filter cartridge

4. Inspect the paper element, and replace air-filter cartridge if the element is damaged or excessively dirty.

   Note: Never try to brush dirt off the paper element; brushing forces the dirt into the fibers.

5. Wipe dirt from the base and the cover with a moist rag.
6. Install the air cleaner cartridge, ensure that it is properly positioned, and secure it with the knurled nut (Figure 18).
7. Securely install the cover with the wing nut (Figure 17).

Replacing the Fuel Filter

Service Interval: Every 500 hours

Note: The engine has a dual-filter system. Replace only the external filter.

1. Stop the engine, remove the key, and wait for the engine to cool down.
2. Remove the fuel-tank cap.
3. Pull the fuel filter out of the fuel tank (Figure 19).

   Note: The filter is tethered to the fuel-tank cap.

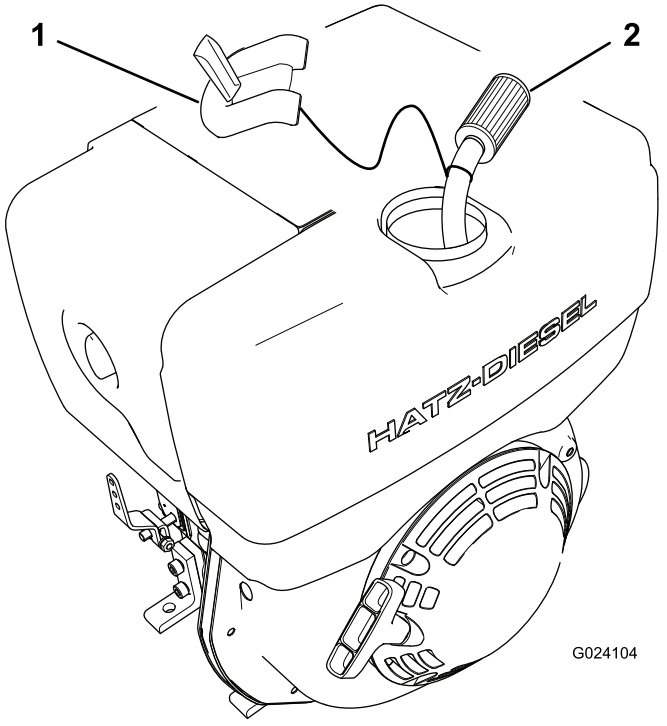

Figure 19

1. Fuel-tank cap
2. Fuel filter

4. Pull the filter off the fuel hose.
5. Install a new filter into the fuel hose.
6. Place the filter into the fuel tank, and install the fuel-tank cap.

Servicing the Engine Oil

Crankcase Capacity: RP-1200D – 1.1 liter (37 oz)

Crankcase Capacity: RP-1400D – 1.5 liter (50.7 oz)

Oil type: API CD, CE, CF, CF-4, CG-4 or higher

Refer to the table below to determine the correct oil viscosity for the ambient air temperature in which the machine is operated:

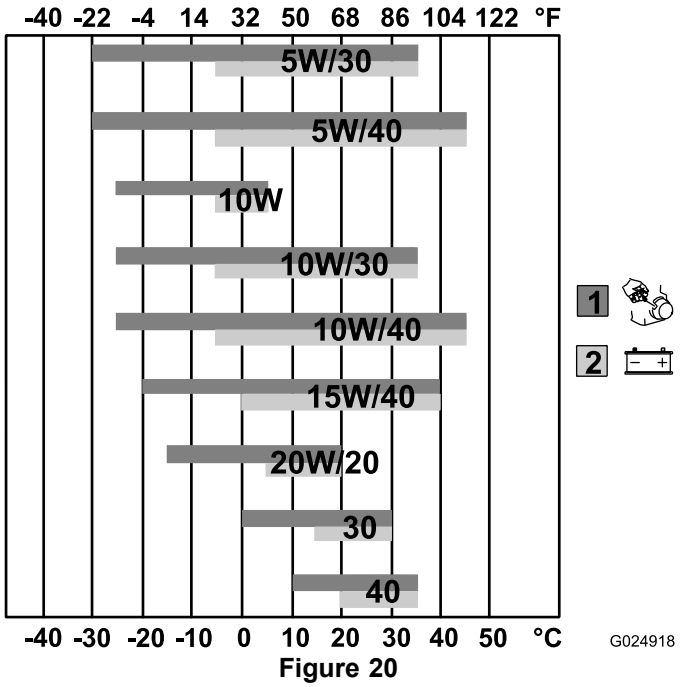

Figure 20

1. Pull-start temperature range
2. Electric-start temperature range

Changing the Engine Oil

Service Interval: After the first 25 hours

Every 100 hours

⚠ WARNING

Oil may be hot after the engine has been run, and contact with hot oil can cause severe personal injury.

Avoid contacting the hot engine oil when you drain it.

1. Stop the engine and wait for all moving parts to stop.
2. Place a drain pan under the drain plug (Figure 21).

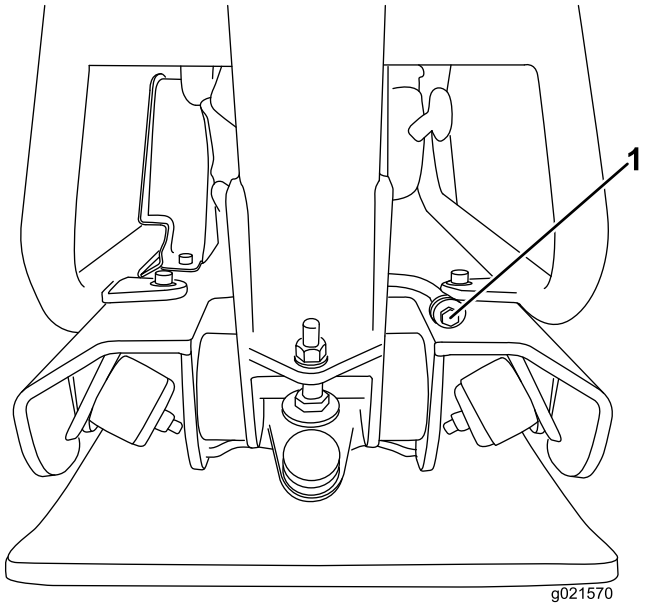

Figure 21

1. Drain plug

3. Remove the drain plug (Figure 21).

   Note: You may have to tip the compactor backward to drain the oil.

4. When the oil has drained completely, replace the plug.

   Note: Dispose of the used oil at a certified recycling center.

5. Remove the dipstick (Figure 6) and slowly pour the specified quantity and type of oil into the filler hole.
6. Insert the dipstick and check the engine oil level; refer to Checking the Engine-Oil Level (page 8).
7. Replace and secure the dipstick.
8. Wipe up any spilled oil.

Cleaning the Oil Filter

Service Interval: Every 1,000 hours

1. Drain the engine oil; refer to Changing the Engine Oil (page 15).
2. Loosen the socket-hex bolt approximately 5 turns counterclockwise (Figure 22).

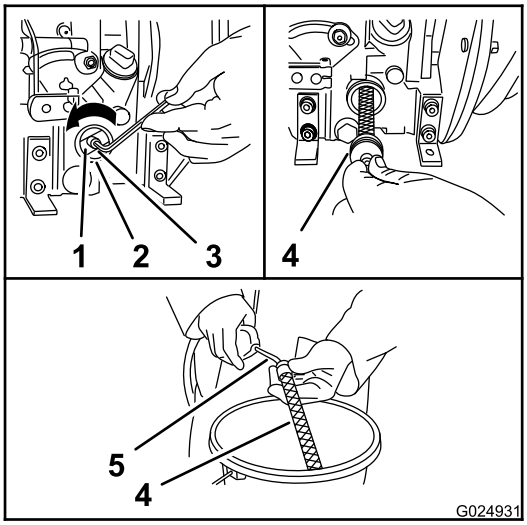

Figure 22

1. Tension spring
2. Filter housing
3. Socket-hex bolt
4. Oil filter
5. Air gun (compressed air)

3. Pull the oil filter out of the filter housing (Figure 22).
4. Blow out the oil filter with compressed air from the inside to the outside (Figure 22).
5. Check the gasket on the oil filter for damage.

   Note: If the gasket is damaged, replace it before installing the oil filter.
6. Insert the oil filter into the filter housing (Figure 22).

   Note: Ensure that the filter is fully seated in the housing.
7. Before tightening the screw, ensure that the tension spring rest against the oil filter at both ends (Figure 22).
8. Tighten the socket-hex bolt (Figure 22).
9. Add oil to the engine; refer to Changing the Engine Oil (page 15).

Servicing the Eccentric Oil

Oil capacity: 0.5 liter (6.9 oz)

Oil Type: Detergent oil (API service SJ or higher)

Oil viscosity: 15W-40

Checking the Eccentric-Oil Level

Service Interval: Monthly

1. Move the machine to a level surface.
2. Set the throttle to slow, stop the engine, and wait for all moving parts to stop.
3. Place rags below the oil plug at the right side of the eccentric housing (Figure 23).

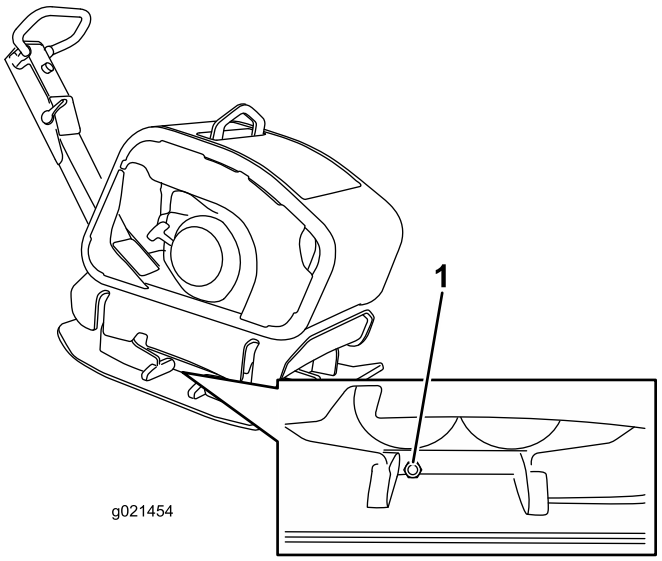

Figure 23

1. Oil plug

4. Remove the oil plug (Figure 23).
5. Verify that the eccentric oil is level with the bolt hole.

   Note: If adding oil is required, use a funnel with a hose to add the specified oil into the eccentric housing until the oil level is level with the oil plug hole.
6. Wipe up any spilled oil.
7. Replace the oil plug (Figure 23).

Changing the Eccentric Oil

Service Interval: Yearly

Every 300 hours

1. Move the machine to a level surface.
2. Set the throttle to slow, stop the engine, and wait for all moving parts to stop.
3. Raise the machine with lifting equipment with a 440 kg (970 lb) lift capacity.
4. Place an oil drain pan under the oil plug and remove the plug from the eccentric housing (Figure 23).
5. Tip the plate compactor slightly to the right, and use a suction gun to remove the oil through the oil plug hole (Figure 23).
6. Tip the plate compactor slightly to the left, and slowly pour 0.5 liter (6.9 oz) of the specified oil into the oil plug hole (Figure 23).

   Note: Use a funnel with a hose to pour oil into the oil plug hole if necessary.
7. Lower the machine onto the level surface.
8. Verify that the oil level is correct when there is a slight flow of oil out of the oil plug hole when the compactor is level.

   Note: If additional oil is required, use a funnel with a hose to add the specified oil into the eccentric housing until the oil level is level with the oil plug hole.
9. Wipe up any spilled oil.
10. Replace the oil plug screw.

Servicing the Battery (Model 68075 only)

Checking and Cleaning the Battery

Service Interval: Every 100 hours—Check the battery cable connections.

Keep the top of the battery clean. If the machine is stored in a location where temperatures are extremely high, the battery will discharge more rapidly than if the machine is stored in a cooler location.

Keep the top of the battery clean by washing it with a brush dipped in ammonia or a solution of sodium bicarbonate. Flush the top surface with water after cleaning. Do not remove the fill cap while cleaning the battery.

The battery cables must be tight on the terminals to provide good electrical contact.

If corrosion occurs at the battery terminals, disconnect the cables, negative (-) cable first, and scrape the clamps and terminals separately. Connect the cables, positive (+) cable first, and coat the terminals with petroleum jelly.

Charging the Battery

⚠ WARNING

Charging the battery produces gases that can explode, seriously injuring you or bystanders.

Never smoke near the battery, and keep sparks and flames away from the battery.

Important: Always keep the battery fully charged. This is especially important to prevent battery damage when the temperature is below 0°C (32°F).

1. Charge the battery for 10 to 15 minutes at 25 to 30 amps, or 30 minutes at 10 amps.
2. When the battery is fully charged, unplug the charger from the electrical outlet, and disconnect the charger leads from the battery posts (Figure 24).
3. Install the battery in the machine and connect the battery cables; refer to Replacing the Battery (page 18).

   Important: Do not run the machine with the battery disconnected; electrical damage may occur.

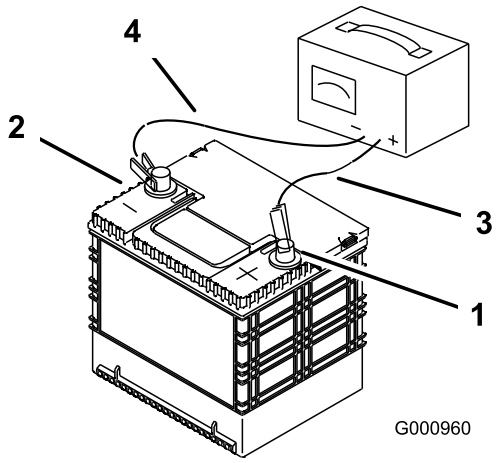

Figure 24

1. Positive battery post
2. Negative battery post
3. Red (+) charger lead
4. Black (-) charger lead

If the battery no longer holds a charge, replace it; refer to Replacing the Battery (page 18).

Replacing the Battery

1. Remove the cover of the battery box.
2. Disconnect the negative (black) ground cable from the battery post.

⚠ WARNING

Incorrect battery cable routing could damage the machine and cables, causing sparks. Sparks can cause the battery gases to explode, resulting in personal injury.

- **Always disconnect the negative (black) battery cable before disconnecting the positive (red) cable.**
- **Always connect the positive (red) battery cable before connecting the negative (black) cable.**

⚠ WARNING

Battery terminals or metal tools could short against metal machine components, causing sparks. Sparks can cause the battery gases to explode, resulting in personal injury.

- **When removing or installing the battery, do not allow the battery terminals to touch any metal parts of the machine.**
- **Do not allow metal tools to short between the battery terminals and metal parts of the machine.**

3. Remove the positive (red) battery cable.
4. Remove the battery.

   Note: Recycle the old battery at an authorized facility.
5. Place the new battery in the tray.
6. Install the positive (red) battery cable to the positive (+) battery terminal, and tighten the nut onto the bolt.
7. Install the negative (black) ground cable to the negative (-) battery terminal, and tighten the nut onto the bolt.
8. Install the cover of the battery box, and secure it with the strap.

Servicing the Belt

Checking the Belt Tension

1. Remove the bolts holding the belt cover in place (Figure 25).

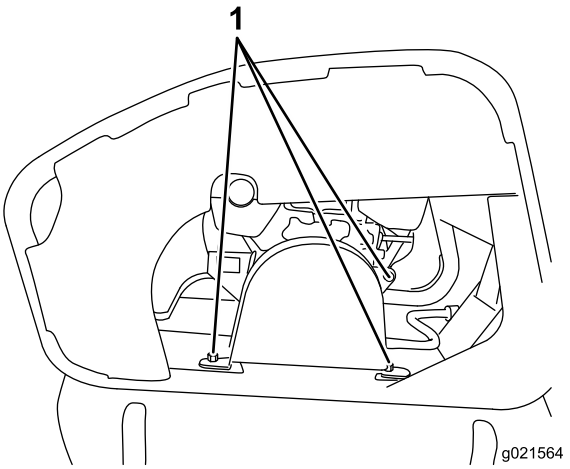

Figure 25

1. Bolts

2. Apply 2 kg (4.4 lb) of pressure to the middle of the belt.

   Note: When the belt is tensioned correctly, it should deflect approximately 0.5 cm (0.2 inches).
3. If the belt is not tensioned properly, refer to Adjusting the Belt Tension (page 18).

Adjusting the Belt Tension

Service Interval: Every 500 hours

1. Remove the bolts holding the belt cover in place (Figure 25).
2. Loosen the engine mounting bolts.
3. Adjust the position of the engine until you obtain the belt tension specified in 2 of Checking the Belt Tension (page 18).
4. Tighten the engine mounting bolts and replace the belt cover.

Storage

1. Stop the engine.
2. Remove dirt and grime from the entire machine.

   Important: You can wash the machine with mild detergent and water. Do not pressure wash the machine. Avoid excessive use of water, especially near the engine.
3. Service the air cleaner; refer to Servicing the Air Cleaner (page 13).
4. Change the engine oil; refer to Changing the Engine Oil (page 15).
5. Fill the fuel tank; refer to Filling the Fuel Tank (page 10).
6. Check and tighten all bolts, nuts, and screws. Repair or replace any part that is damaged.
7. Paint all scratched or bare metal surfaces. Paint is available from your Authorized Service Dealer.
8. Store the machine in a clean, dry garage or storage area.
9. Cover the machine to protect it and keep it clean.

Troubleshooting

Problem	Possible Cause	Corrective Action
The engine will not start, starts hard, or fails to keep running.	1. The fuel tank is empty. 2. The air cleaner is dirty.	1. Fill the fuel tank with fuel. 2. Clean or replace the air cleaner element.
The plate does not vibrate at full speed.	1. The oil level in the eccentric housing is too high. 2. The belt is loose.	1. Check the oil level and drain as necessary. 2. Adust the belt tension.
The clutch is extremely hot.	1. A foreign object is lodged against the eccentric sheave. 2. The oil level in the eccentric housing is too high. 3. The clutch is slipping. 4. The engine speed is not reaching full rpm.	1. Remove the obstruction. 2. Check the oil level and drain as necessary. 3. See your authroized Toro service dealer. 4. See your authroized Toro service dealer.
The plate does not vibrate when the engine is running.	1. The belt is broken. 2. The clutch is broken or worn out. 3. The eccentric has seized.	1. Replace the belt. 2. Replace the clutch. 3. Ensure the eccentric is free turning.

Notes:

Notes:

Notes:

Concrete, Masonry, and Compaction Equipment

The Toro Warranty

A limited warranty (see warranty periods below)

Conditions and Products Covered

The Toro Company and its affiliate, Toro Warranty Company, pursuant to an agreement between them, jointly warrant your Toro Concrete, Masonry, and Compaction Equipment Products listed below to be free from defects in materials or workmanship.

This warranty covers the cost of parts and labor, but you must pay transportation costs.

The following time periods apply from the date of purchase:

Products	Warranty Period
Concrete Mixers	1 year
• Spindle Bearings	Lifetime* (original owner only)
Mortar Mixers	1 year
• Drum Bearings and Seals	Lifetime* (original owner only)
Forward Plate Compactors	2 years
Reversible Plates	1 year
Rammer Compactors	2 years
Mud Buggy	1 year
Vibrating Trench Roller	2 years
Concrete Saws	1 year
Masonry Saws	1 year
Power Trowels	1 year
Screeds	1 year
Concrete Vibrators	1 year

Where a warrantable condition exists, we will repair the Product at no cost to you including diagnosis, labor, and parts.

*Lifetime Warranty - If the bearing(s) or seal(s) on your mixer fail, it will be replaced under warranty, at no cost for parts or labor.

Instructions for Obtaining Warranty Service

If you think that your Toro Product contains a defect in materials or workmanship, follow this procedure**:

1. Contact any Authorized Servicing Outlet to arrange service at their dealership. To locate one convenient to you, access our website at www.Toro.com. Select “Where to Buy” and select “Contractor” under product type. You may also call our toll free number below.
2. Bring the product and your proof of purchase (sales receipt) to them.
3. If for any reason you are dissatisfied with the Service Outlet’s analysis or with the assistance provided, contact us at:

   SWS Customer Care Department
   Toro Warranty Company
   8111 Lyndale Avenue South
   Bloomington, MN 55420-1196
   Toll Free: 800-888-9926

**Toro Authorized Rental Customers who have purchased products directly from Toro and have signed the Toro Rental Customer Agreement have the ability to perform their own warranty work. Please visit Toro’s Rental Portal for electronic warranty clam filing procedures or call the toll free number above.

Owner Responsibilities

You must maintain your Toro Product by following the maintenance procedures described in the *Operator’s Manual*. Such routine maintenance, whether performed by a dealer or by you, is at your expense. Parts scheduled for replacement as required maintenance (“Maintenance Parts”), are warranted for the period of time up to the scheduled replacement time for that part. Failure to perform required maintenance and adjustments can be grounds for disallowing a warranty claim.

Items and Conditions Not Covered

Not all product failures or malfunctions that occur during the warranty period are defects in materials or workmanship. This express warranty does not cover the following:

- Product failures which result from the use of non-Toro replacement parts, or from installation and use of add-on, modified, or unapproved accessories
- Product failures which result from failure to perform required maintenance and/or adjustments
- Product failures which result from operating the Product in an abusive, negligent or reckless manner
- Parts subject to consumption through use unless found to be defective. Examples of parts which are consumed, or used up, during normal product operation include, but are not limited to, belts, wipers, spark plugs, tires, filters, gaskets, wear plates, seals, O-rings, drive chains, clutches.
- Failures caused by outside influence. Items considered to be outside influence include, but are not limited to, weather, storage practices, contamination, use of unapproved coolants, lubricants, additives, or chemicals, etc.
- Normal “wear and tear” items. Normal “wear and tear” includes, but is not limited to, worn painted surfaces, scratched decals, etc.
- Any component covered by a separate manufacturer’s warranty
- Pickup and delivery charges

General Conditions

Repair by an Authorized Servicing Outlet or Self-Service as an Authorized Rental Customer is your sole remedy under the warranty.

Neither The Toro Company nor Toro Warranty Company is liable for indirect, incidental or consequential damages in connection with the use of the Toro Products covered by this warranty, including any cost or expense of providing substitute equipment or service during reasonable periods of malfunction or non-use pending completion of repairs under this warranty. All implied warranties of merchantability and fitness for use are limited to the duration of this express warranty. Some states do not allow exclusions of incidental or consequential damages, or limitations on how long an implied warranty lasts, so the above exclusions and limitations may not apply to you.

This warranty gives you specific legal rights, and you may also have other rights which vary from state to state.

Except for the engine warranty coverage and the Emissions warranty referenced below, if applicable, there is no other express warranty. The Emissions Control System on your Product may be covered by a separate warranty meeting requirements established by the U.S. Environmental Protection Agency (EPA) or the California Air Resources Board (CARB). Refer to the California Emission Control Warranty Statement supplied with your Product or contained in the engine manufacturer’s documentation for details.

Countries Other than the United States or Canada

Customers who have purchased Toro products outside the United States or Canada should contact their Toro Distributor (Dealer) to obtain guarantee policies for your country, province, or state. If for any reason you are dissatisfied with your Distributor's service or have difficulty obtaining guarantee information, contact the Toro importer. If all other remedies fail, you may contact us at Toro Warranty Company.

Australian Consumer Law: Australian customers will find details relating to the Australian Consumer Law either inside the box or at your local Toro Dealer.