FORM NO. 3313-881

TORO

MODEL NO. 38190-0000001 & UP
MODEL NO. 38195-0000001 & UP

OPERATOR'S MANUAL

CCR 1000 SNOWTHROWER

⚠ SAFETY INSTRUCTIONS

To assure maximum safety, optimum performance, and to gain knowledge of the product, it is essential that you or any other operator of the snowthrower read and understand the contents of this manual before the motor is ever started. Pay particular attention to the safety alert symbol which means CAUTION, WARNING OR DANGER — "personal safety instruction." Read and understand the instruction because it has to do with safety. Failure to comply with instruction may result in personal injury.

This snowthrower is designed and tested to offer safe and effective service, provided it is operated in strict accordance with the following Safety Instructions. Failure to comply with the following instructions **MAY RESULT IN PERSONAL INJURY.**

BEFORE OPERATING

1. Read and understand the contents of this manual before operating the snowthrower. Become familiar with all controls and know how to stop quickly.
2. Never allow children to operate the snowthrower. Adults should operate the snowthrower only after reading this manual.
3. Keep everyone, especially children and pets, away from area of operation.
4. Inspect area thoroughly where snowthrower will be used. Remove doormats, sleds, boards, sticks, wire, and any other foreign objects which might be picked up and thrown by the snowthrower.
5. Keep all shields and safety devices in place. If a shield, safety device, or decal is illegible or damaged, repair or replace it before beginning operation. Also, tighten any loose nuts, bolts, or screws.
6. Wear adequate winter clothing and rubber boots that will assure proper footing on slippery surfaces. Do not wear loose fitting clothing that could possibly get caught in moving parts.
7. Because fuel is highly flammable, handle it carefully.
   - A. Use an approved container.
   - B. Fill fuel tank outdoors, not indoors. **NEVER ADD FUEL TO AN ENGINE THAT IS RUNNING OR HOT.**
   - C. Install gas cap on fuel container and gas tank, and wipe up any spilled gasoline before starting engine.
8. Allow engine to warm up outdoors before operating. Do not run engine indoors.

WHILE OPERATING

9. Use only the extension cord provided with the CCR 1000 Electric Start Model. Do not plug the extension cord into outlet while standing in water or when hands are wet. Do not use cord if gasoline has been spilled. If extension cord is damaged, replace immediately.

©The Toro Company-1989

⚠ SAFETY INSTRUCTIONS

10. Never direct discharge toward or operate snowthrower near bystanders, glass enclosures, automobiles and trucks, window wells, or a drop-off. Never allow anyone in front of snowthrower.

11. Keep people and pets a safe distance away from the snowthrower and area of operation.

12. Operate the snowthrower only when there is good visibility or light. Always maintain secure footing and balance and keep a firm grip on the handle. Walk; never run.

13. Be attentive when using the snowthrower, and stay alert for holes in the terrain and other hidden hazards.

14. STAY AWAY FROM DISCHARGE OPENING WHILE OPERATING THE SNOWTHROWER. Keep face, hands, feet, and any other part of your body or clothing away from concealed, moving, or rotating parts.

15. Never clear snow off steep slopes or across the face of slopes. Exercise extreme caution when changing direction on slopes.

16. DO NOT USE SNOWTHROWER ON A ROOF.

17. Do not overload the snowthrower by clearing snow at too fast a rate.

18. Use extreme caution when crossing or operating snowthrower on walks, roads, or gravel or crushed rock drives. Refer to Operating Instructions, page 8, item 4 for correct operating procedure.

19. If a foreign object is hit or snowthrower vibrates abnormally, stop engine by turning key to OFF and wait for all moving parts to stop. Check snowthrower immediately for possible damage, an obstruction, or loose parts. Vibration is generally a sign of trouble. Repair any damage before operating snowthrower again.

20. Before adjusting, cleaning, repairing, or inspecting the snowthrower, or before unclogging the discharge chute, stop engine by turning key to OFF and wait for all moving parts to stop. Do not make adjustments while engine is running.

21. WHENEVER YOU LEAVE THE OPERATING POSITION, STOP ENGINE BY TURNING KEY TO OFF. REMOVE KEY FROM SWITCH IF UNIT WILL BE UNATTENDED.

22. Let snowthrower run for a few minutes after clearing snow so moving parts do not freeze.

MAINTAINING SNOWTHROWER

23. REMOVE KEY FROM SWITCH when storing snowthrower. Store key in a memorable place.

24. Never store snowthrower with fuel in fuel tank inside a building where open flame or sparks are present. Allow engine to cool before storing. Never store snowthrower in house (living area) or basement because gasoline and fumes are highly flammable, explosive, and dangerous if inhaled.

25. Perform only those maintenance instructions described in this manual. Remove key from switch before performing maintenance procedures to prevent the possibility of accidental starting. If major repairs are ever needed, contact your local Authorized TORO Service Dealer for assistance.

26. Keep snowthrower in safe operating condition by keeping nuts, bolts, and screws tight. Check all fasteners frequently to assure they are tight.

27. To assure optimum performance and safety, purchase genuine TORO replacement parts and accessories to keep your TORO all TORO. **NEVER USE "WILL FIT" REPLACEMENT PARTS AND ACCESSORIES.** The TORO logo assures genuineness.

SAFETY SYMBOL GLOSSARY

Safety decals and instructions are easily visible to the operator and are located near any area of potential danger. Replace any decal that is damaged.



Whenever you leave the operating position, stop engine by turning key to OFF.



Rotor drive—Engaged

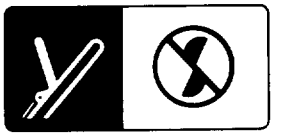

Rotor drive—Disengaged

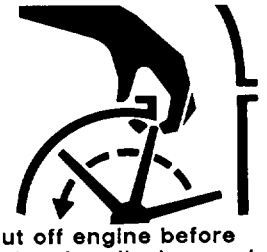

Shut off engine before unclogging discharge chute



Avoid injury from rotating auger by keeping hands, feet, and clothing away.



Read and understand operator's manual



Choke on



Recoil starter



Ignition off



Ignition on



Primer pump

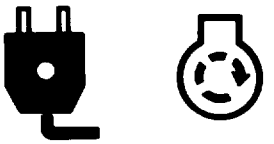

110 volt starter



32:1 ratio unleaded gasoline to TORO 2-cycle oil

TABLE OF CONTENTS

	Page
Assembly Instructions	4–5
Before Operating	5–6
Operating Instructions	7–8
Maintenance	8–12
Adjusting Control Bar	8–9
Draining Gasoline	9
Replacing Scraper	9
Replacing Drive Belt	10
Replacing Spark Plug	10–11
Replacing Rotor Blades	11–12
Adjusting Carburetor	12
Storing Snowthrower	12–13
Toro Service Support	13
Product Identification	13
Maintenance Record	14–15
The Toro Promise	

ASSEMBLY INSTRUCTIONS

Note: Determine left and right sides of snowthrower by standing in the normal operating position.

INSTALL WHEELS (Fig. 1)

1. Place a wood block under the wheel axle for support.

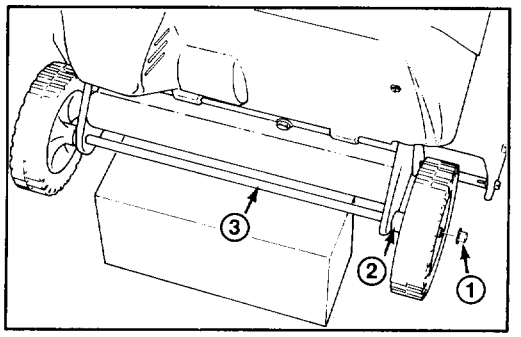

Figure 1

1. Push nut
2. Spacer
3. Axle

2. Slide a spacer and wheel onto the axle. The side of the wheel with six spokes must face the center of the axle. Slide a pushnut onto the end of the axle.

3. Using a hammer, strike the pushnut to seat the nut firmly in place. Repeat steps 1–3 for the other wheel.

INSTALL DISCHARGE CHUTE AND CHUTE HANDLE (Fig. 2)

1. Place chute handle over chute ring.

2. Insert discharge chute between chute ring and chute handle. Align holes.

3. Secure back of chute and handle to center hole in chute ring with a carriage bolt, washer, and locknut. Position washer and nut on outside of chute.

Note: Chute ring may be rotated to ease assembly of discharge chute.

4. Secure chute and handle to remaining holes in chute ring and tighten all nuts, but DO NOT OVERTIGHTEN.

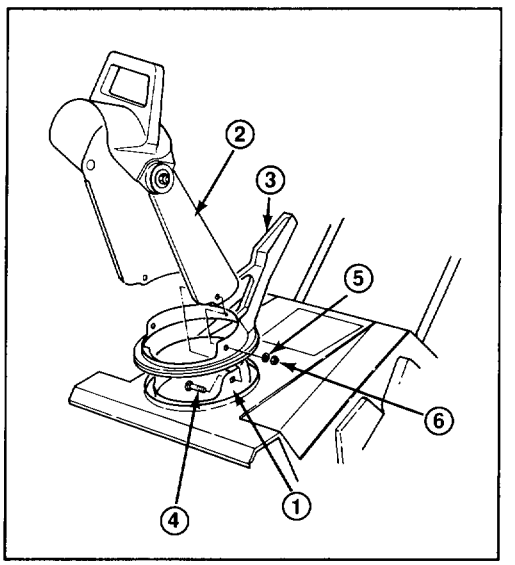

Figure 2

1. Chute ring
2. Discharge chute
3. Chute handle
4. Carriage bolt
5. Washer
6. Locknut

INSTALL HANDLE (Fig. 3)

1. Remove tie securing control cable to lower handle.

2. Slide handle ends through openings in shroud and onto lower handles inside shroud.

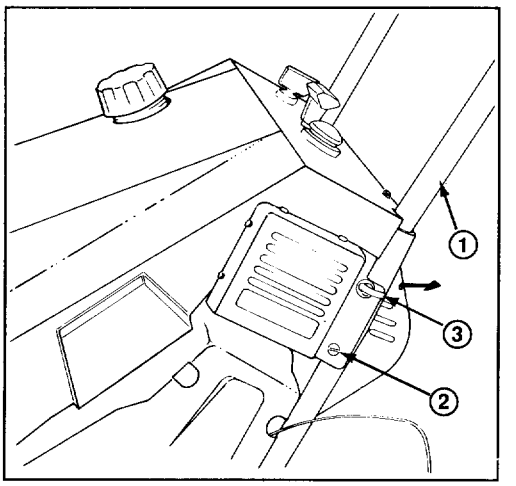

Figure 3

1. Handle
2. Machine screw
3. Eyebolt & spacer

ASSEMBLY INSTRUCTIONS

3. Secure right side of handle with (2) machine screws. Secure left side of handle with (1) machine screw, (1) eyebolt, and a spacer. Use the eyebolt to mount upper left side of handle. Insert the eyebolt through the spacer before using it to secure handle to the snowthrower frame. The eyebolt must be positioned perpendicular to handle when tightened.

INSTALL CONTROL CABLE

(Figs. 4 & 5)

1. Route control cable through eyebolt on left side of snowthrower.
2. Hook spring to round hole at end of cable adjuster (Fig 4).
3. Route cable through elongated hole in cable adjuster. Insert Z fitting on end of cable into 3rd hole on cable adjuster (Fig. 4).

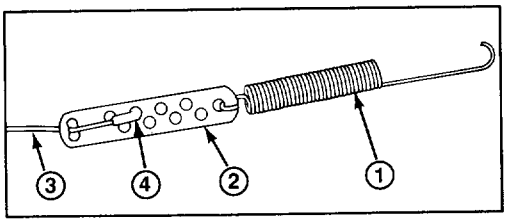

Figure 4

1. Spring
2. Cable adjuster
3. Cable
4. Z fitting

4. Slide spring cover over spring and cable adjuster. Push spring end through hole at end of spring cover.
5. Hook spring in bottom hole of control bar bracket (Fig. 5).
6. Move control bar back toward handle until slack in cable is removed. The gap between the control bar bracket and handle should be approximately 1/16"-1/8". See insert, Figure 5. If an adjustment is required, refer to Adjusting Control Bar, page 8.

Note: The control cable must always have slack in it when in the disengaged position.

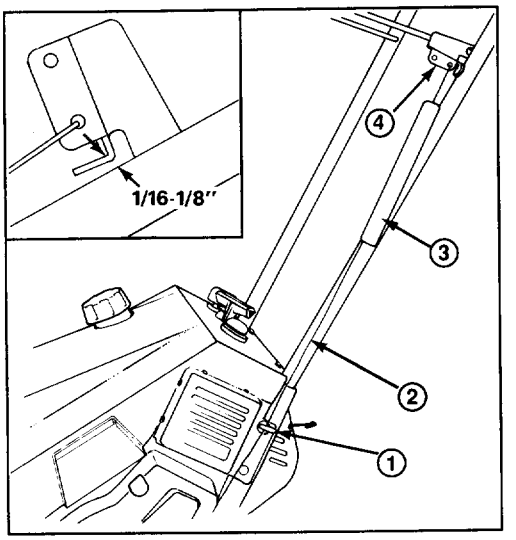

Figure 5

1. Eyebolt & spacer
2. Control cable
3. Spring cover
4. Control bar bracket

BEFORE OPERATING

WARNING

DANGER: Gasoline is extremely flammable and explosive under certain conditions. Do not smoke when handling fuel and keep fuel far away from open flames and sparks. Never buy more than a 30 day supply of gasoline. Store it in an approved container. Keep gasoline out of the reach of children.

Refuel outdoors and only when engine is cold. Fill tank to within 1/4" to 1/2" (6 to13 mm) from its top. This space is for expansion of fuel. Use funnel or spout to prevent spilling. Wipe up any spilled gas. Assure area is dry before starting engine.

BEFORE OPERATING

MIX GASOLINE AND OIL (Fig. 6)

1. APPROVED OIL—For simplicity and best engine performance, mix the contents of one 8-ounce bottle of Toro 32:1 Two-Cycle Oil with two gallons of fresh, unleaded regular gasoline. Leaded regular gasoline may be used if unleaded regular is not available.

Toro Two-Cycle Oil is specially formulated to provide superior lubrication, make starting easy, and prolong engine life. If Toro Two-Cycle Oil is not available, mix two gallons of gasoline and 8 ounces of another high grade two-cycle oil that has the NMMA or BIA-TCW certification printed on the label.

IMPORTANT: YOU CAN ALSO USE TORO "EASY MIX" TWO-CYCLE OIL (3.2 OUNCE BOTTLE MIXED ONE PER GALLON OF GASOLINE 40:1 RATIO) IN THIS TORO TWO-CYCLE ENGINE.

NEVER USE AUTOMOTIVE OIL (i.e. SAE 30, 10W30 etc.), TWO-CYCLE OIL THAT IS NOT CERTIFIED NMMA/BIA-TCW, OR THE WRONG MIX RATIO BECAUSE THE ENGINE CAN BE DAMAGED, AND IT WOULD NOT BE COVERED BY THE TORO WARRANTY.

2. Mixing Gasoline and Oil—Pour correct amount of two cycle oil into an approved gasoline container and add a half gallon of gasoline. Install cap on gasoline container and shake the container to mix oil and gas thoroughly. Remove cap and add remaining amount of gasoline.

IMPORTANT: NEVER USE METHANOL, GASOLINE CONTAINING METHANOL, GASOHOL CONTAINING MORE THAN 10% ETHANOL, PREMIUM GASOLINE, OR WHITE GAS BECAUSE ENGINE FUEL SYSTEM DAMAGE COULD RESULT.

DO NOT USE FUEL ADDITIVES OTHER THAN THOSE MANUFACTURED FOR FUEL STABILIZATION DURING STORAGE (SUCH AS TORO'S PRESERVIT OR A SIMILAR PRODUCT). ADDITIVES SHOULD NOT BE USED TO TRY TO ENHANCE THE POWER OR PERFORMANCE OF MACHINE.

NOTE: Do not mix gasoline and oil in the product fuel tank. Oil that is at room temperature mixes easier and more thoroughly than cold oil.

32:1 GAS/OIL Mixing Chart

U.S. GALLON	
Gasoline	**Oil**
0.8 gallon	3.2 oz.
1 gallon	4 oz.
2 gallon	8 oz.

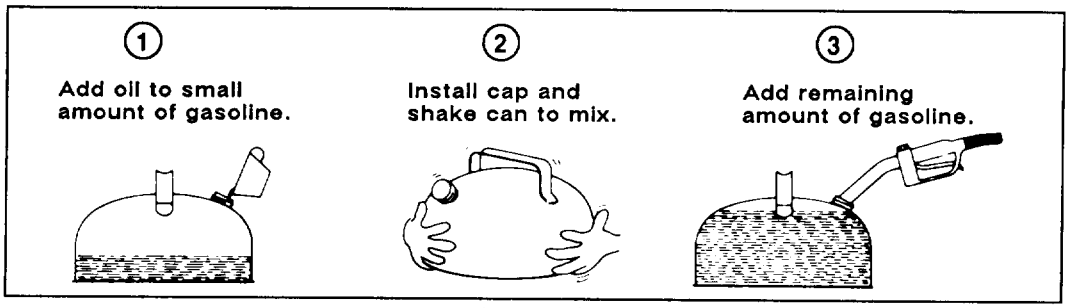

Figure 6

OPERATING INSTRUCTIONS

STARTING/STOPPING ENGINE (Fig. 7)

1. CONTROLS—Key switch, primer, electric start button, and recoil starter are located on the control panel. The choke lever is just below the lower left corner of the control panel.

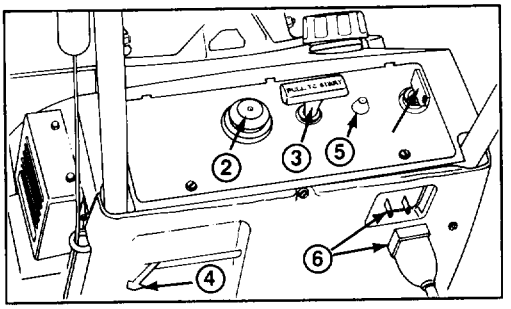

Figure 7

1. Key switch
2. Primer
3. Recoil start
4. Choke
5. Elec. start button*
6. Cord connection*

*ELEC. START MODEL

2. Turn key to ON and move choke lever to ON.

3. Cover hole in center of primer with thumb and push one or two times. An additional prime may be necessary in extremely cold temperatures.

Choke and primer are usually not necessary when starting a warm engine.

4. ELECTRIC STARTING—Connect extension cord to snowthrower and standard household power outlet. Push starter button. When engine starts, disconnect extension cord from snowthrower and outlet.

IMPORTANT: Excessive running of the electric starter could damage the starter due to overheating. To prevent possible damage, do not run electric starter more than 10 times at intervals of 5 seconds (ON 5 seconds, OFF). If this happens, wait more than 40 minutes to allow starter to cool before continuing to run starter. Before repeating engine starting procedure, check that ignition key switch is ON, and make sure there is fresh fuel in fuel tank. If engine continues to fail to start, servicing may be needed.

5. RECOIL STARTING—Hold snowthrower with one hand and pull recoil starter vigorously with other hand.

6. When engine starts, move choke lever to OFF slowly.

7. TO START/STOP ROTOR—To start rotor, squeeze control bar to handle. When the control bar handle is released, the rotor blades stop, but the engine continues to run.

8. TO STOP ENGINE—Release control bar to stop rotor, turn key to OFF, and wait for all moving parts to stop before leaving operator's position.

OPERATING TIPS (Fig. 8)

1. ADJUSTING DISCHARGE CHUTE—Move the chute handle left and right to adjust the direction of the snow stream. The chute deflector handle on top of the discharge chute controls the height of the snow stream. Do not overtighten the chute deflector mounting nuts so excessive force is required to adjust the deflector.

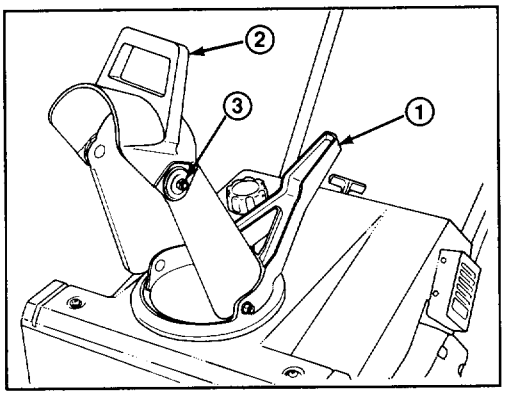

Figure 8

1. Chute handle
2. Chute deflector handle
3. Deflector mounting nuts

OPERATING INSTRUCTIONS

2. SELF PROPELLING ACTION—The snowthrower clears down to the ground and propels itself forward when tilted forward so rotor blades strike the ground. However, depth and height of snow affects forward speed. Always overlap each swath and discharge downwind when possible.

3. Keep the area to be cleared free of stones, toys, or other foreign objects which may be picked up and thrown by the rotor blades. Such items could be covered by snowfall and, therefore, unnoticed until struck by the rotor blades. Always be sure to keep children and pets away from area of operation.

4. Should you find it necessary to clear snow from crushed rock or gravel, push down on handle to raise rotor blades clear of loose material that could be thrown by the blades and push unit forward.

5. In some snow and cold weather conditions, some controls and moving parts may freeze solid. Therefore, when any control becomes hard to operate, stop the engine. Check all parts for excessive freeze up. **DO NOT USE EXCESSIVE FORCE WHEN TRYING TO OPERATE FROZEN CONTROLS.** Free all controls and moving parts before operating.

6. AFTER CLEARING SNOW—Let engine run for a few minutes so ice does not freeze moving parts solid. After engine is shut off, wipe ice and snow off entire unit.

IMPORTANT: STORE SNOWTHROWER IN OPERATING POSITION ON ITS WHEELS. TIPPING OR STORING UNIT ON ITS NOSE MAY CAUSE HARD STARTING.

MAINTENANCE

GENERAL MAINTENANCE

Keep snowthrower in safe operating condition by cleaning the unit and tightening nuts, bolts, and screws. The scraper, drive belt, rotor blades, and spark plug should be checked once a year.

ADJUSTING CONTROL BAR (Figs. 9 & 10)

Periodically check control bar for proper adjustment.

1. Turn ignition key to OFF.

2. CHECK ADJUSTMENT (Fig. 9)—Move control bar back toward handle until slack in cable is removed. Gap between control bar bracket and handle should be approximately 1/16"–1/8". If cable is too loose or too tight, proceed to step 3 for adjustment procedure.

Note: The control cable must always have slack in it when in the disengaged position.

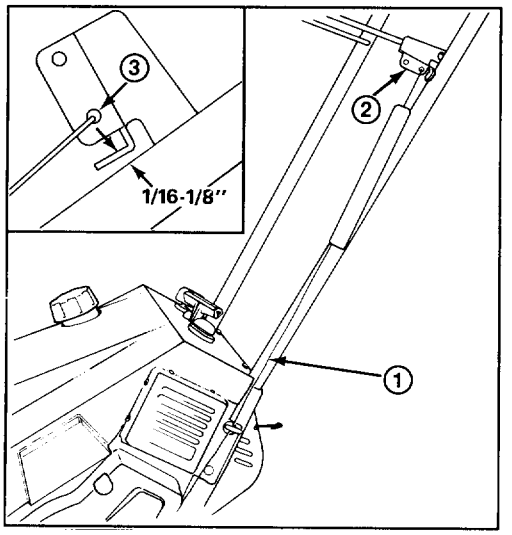

Figure 9

1. Cable
2. Control bar bracket
3. Bottom hole

3. ADJUST CABLE (Fig. 10)—Unhook spring end from the bottom hole in control bar bracket. Slide spring cover off cable to expose cable adjuster. Unhook Z fitting from cable adjuster and reposition Z fitting in a higher or lower hole on adjuster to obtain proper gap of 1/16"–1/8". Reinstall spring cover over cable adjuster. Rehook spring onto bottom hole of control bar bracket.

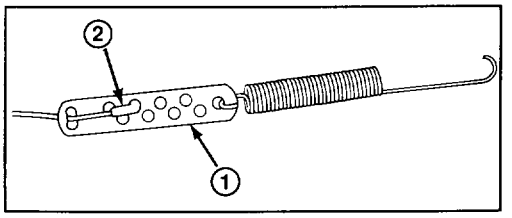

Figure 10

1. Cable adjuster 2. Z fitting

4. After extended use the drive belt may wear and proper belt tension may not be maintained. Improper belt tension causes belt slippage and decreases the snowthrower's performance under a heavy load. Belt slippage may occur after 2–3 seasons of normal usage (10–15 hours). If drive belt slips under heavy load, increase belt tension by repositioning spring end into upper hole in control bar bracket. Readjust cable (steps 2–3 above).

IMPORTANT: Unnecessary use of upper adjusting hole in control bar bracket reduces drive belt life. Occasional belt slippage may occur in extremely wet conditions due to moisture in drive system. To remove moisture, start rotor and operate under no load for 30 seconds. Once moisture is removed, belt should not slip.

DRAINING GASOLINE

1. Stop engine. Remove key from switch.

2. Remove cap from fuel tank and use a pump type syphon to drain fuel into a clean gas can.

Note: This is the only procedure recommended for draining fuel.

REPLACING SCRAPER (Figs. 11 & 12)

Before each season, inspect scraper for wear. If thickness of bottom of scraper is less than 1/16" (1.6 mm), replace scraper (Fig. 11).

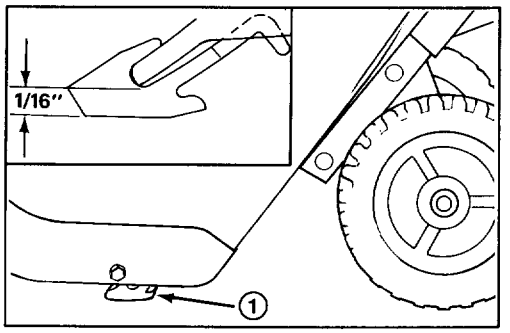

Figure 11

1. Scraper

1. Turn ignition key to OFF.
2. Drain gasoline from fuel tank; refer to Draining Gasoline, page 9.
3. Tip snowthrower forward onto nose.
4. Remove (3) carriage bolts and (3) flange nuts holding scraper in place (Fig. 12). Remove scraper.

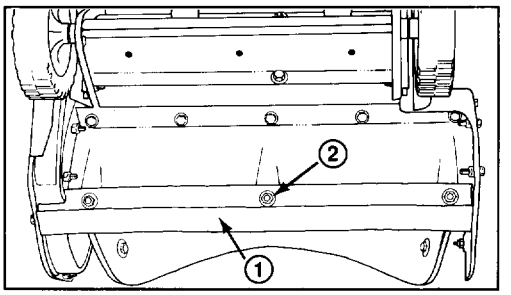

Figure 12

1. Scraper 2. Carriage bolt & flange nut

5. Secure new scraper to housing with carriage bolts and flange nuts. Position heads of bolts inside housing.

MAINTENANCE

REPLACING DRIVE BELT

(Figs. 13 & 14)

After extended use, the drive belt may wear and require replacement. If, after adjusting the control bar, the drive belt continues to slip under a heavy load or the rotor does not turn, check to see if the belt is severely worn.

1. Turn ignition key to OFF.
2. Drain gasoline from fuel tank; refer to Draining Gasoline, page 9.
3. Tip snowthrower on right side.
4. Remove (3) self tapping screws, (3) capscrews, (1) washer, and (3) nuts securing left side cover to snowthrower frame (Fig. 13). Lift off left side cover and allow it to hang from the cable.

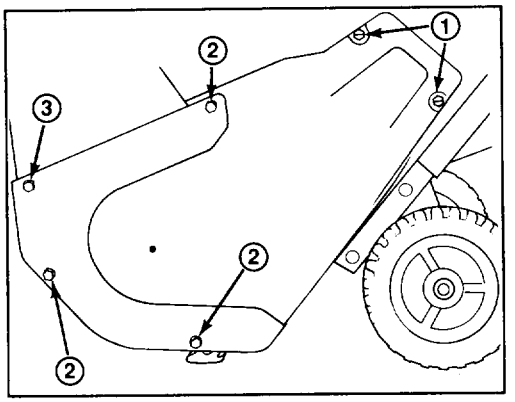

Figure 13

1. Self tapping screws
2. Capscrew, nut
3. Capscrew, nut, washer

5. REMOVING BELT (Fig. 14)—Slip belt off idler pulley. Push idler pulley downward, and slip belt from rotor pulley, idler pulley, and engine pulley.
6. INSTALLING BELT (Fig. 14)—Loop belt around rotor pulley and engine pulley first without slipping belt between rotor pulley and brake. Next, push idler pulley downward and slide belt between rotor pulley and brake. Release idler pulley, and slip belt under idler pulley.
7. Have a helper squeeze the control bar up against the handle (rotor engaged position) and hold it in that position.

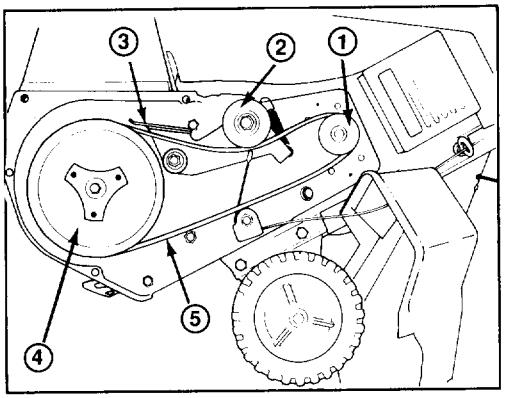

Figure 14

1. Engine pulley
2. Idler pulley
3. Brake arm
4. Rotor pulley
5. Belt

8. Reinstall the left side cover while holding control bar against handle. Tighten fasteners securely, but DO NOT OVERTIGHTEN.

REPLACING SPARK PLUG

(Figs. 15, 16 & 17)

Before each snow season, check the spark plug. If electrodes in center of plug are dark or have deteriorated, install a new plug. Use a Champion CJ8Y spark plug and set gap at .030" (.76 mm).

1. REMOVE CONTROL PANEL (Fig. 15)—Remove (2) screws securing control panel to housing. Remove ignition key and lift off panel, allowing it to hang on recoil rope.

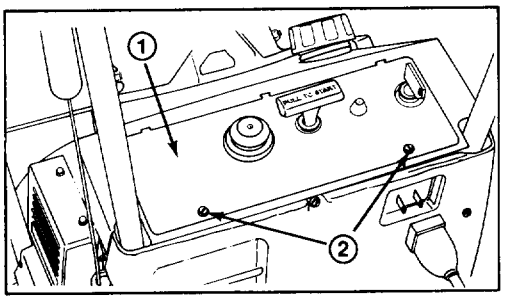

Figure 15

1. Control panel
2. Capscrews

2. REMOVE SPARK PLUG (Fig. 16)—Pull wire off spark plug and remove plug. Examine the plug and replace if cracked, fouled, or dirty. **DO NOT SANDBLAST, SCRAPE, OR CLEAN SPARK PLUG BECAUSE DIRT MAY RELEASE AND FALL INTO CYLINDER CAUSING ENGINE DAMAGE.**

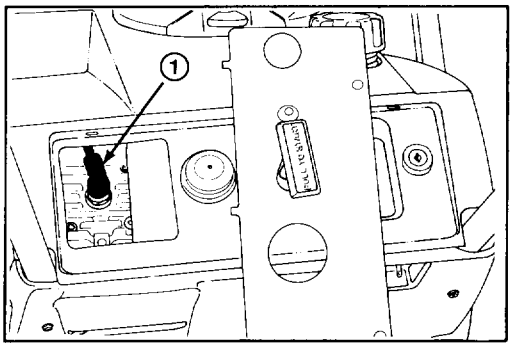

Figure 16

1. Spark plug wire

3. INSTALL SPARK PLUG—Set air gap (Fig. 17) between electrodes at .030" (.76 mm). Install plug and tighten to 15 ft-lb (20.4 N·m). If torque wrench is not used, tighten plug firmly with fingers. Push wire onto spark plug and reinstall control panel.

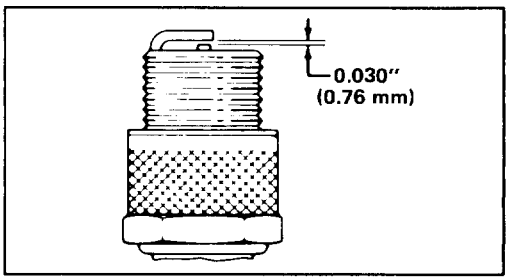

Figure 17

REPLACING ROTOR BLADES (Figs. 18 & 19)

Before each snow season, inspect rotor blades for wear. From the front (concave) side of the blade, in the center, measure distance from end of rotor blade to steel plate. See Figure 18 for measuring location. If distance is less than 1-5/16" (33 mm), blades must be replaced to assure proper performance and prevent damage to underside of snowthrower.

Note: Whenever rotor blades are replaced, scraper should also be replaced to assure proper snowthrower operation and performance.

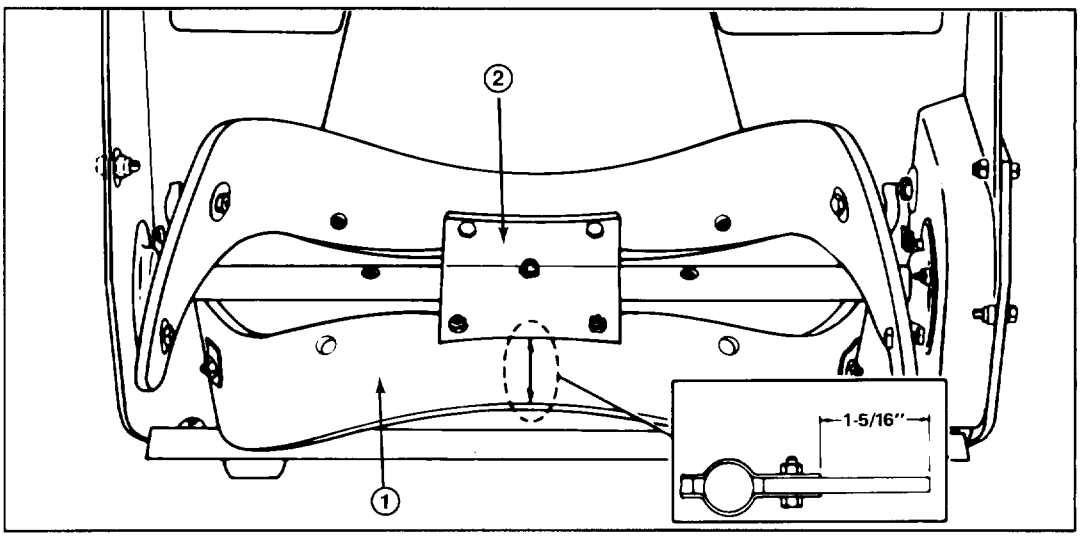

Figure 18

1. Rotor blade
2. Steel plate

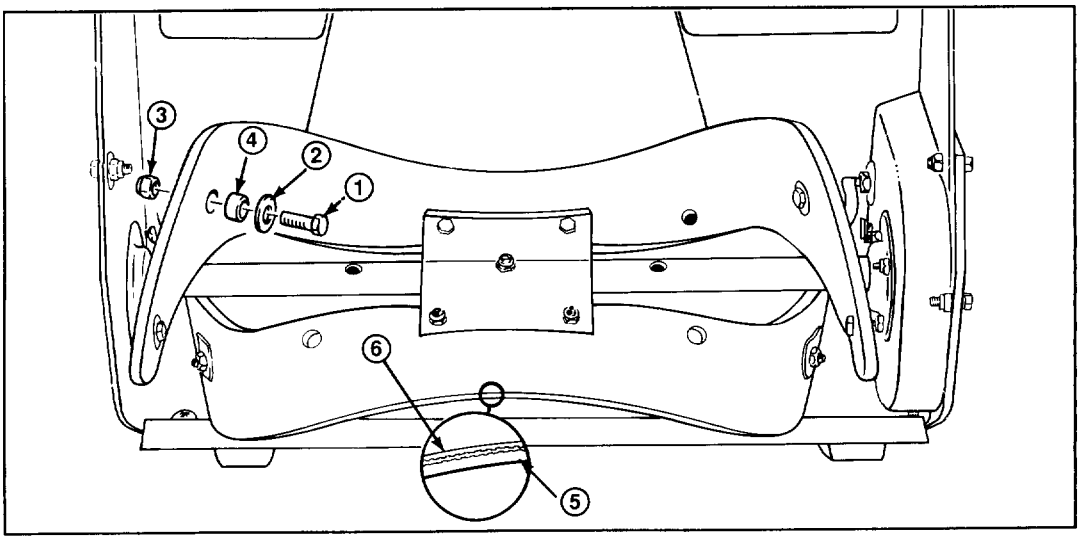

Figure 19

1. Bolt
2. Washer
3. Locknut
4. Bushing
5. Thick side
6. Thin side

1. REMOVING BLADE (Fig. 19)—Remove (6) 7/16" bolts, (4) washers, and (6) locknuts securing blade to rotor shaft assembly.

2. Slide the blade out from between the steel plates and push the (6) bushings out of the blade holes (Fig. 19).

3. INSTALLING NEW BLADE—The rotor blades are made of laminated rubber. Examine the edge of a blade to see the difference in layer thicknesses (Fig. 19).

Both blades must be installed with the thick side facing down. If one blade is installed with the thicker layer facing up and the other blade installed with the thicker layer facing down, the blades will be unbalanced, causing the snowthrower to "hop" or "bounce."

4. Press the (6) bushings into the holes in the new blade.

5. Insert the new blade between the steel plates. Secure it to the steel plates with (2) 7/16" bolts and (2) locknuts. Position bolt heads on thick (bottom) side of blade. Curve the blade, and secure it with the remaining (4) bolts, washers, and locknuts (position bolt heads and washers on thick side of blade). Tighten all bolts.

ADJUSTING CARBURETOR

The carburetor has been factory set, and no adjustment is required. However, when operating snowthrower at altitudes of 5000 feet above sea level or higher, carburetor jets may have to be changed. Contact your local Authorized Toro Service Dealer for assistance.

STORING SNOWTHROWER

1. DRAIN GASOLINE—Refer to Draining Gasoline, page 9.

2. RUN ENGINE DRY—Start engine and let run until it stops because there is no fuel. When engine begins to sputter, pull out choke. If engine does not restart, pull recoil starter 5-10 times.

IMPORTANT—Draining fuel and letting engine run dry prevents gum-like deposits from forming in the fuel system. If fuel is left in snowthrower, these deposits will form and cause starting problems next season.

MAINTENANCE

3. CYLINDER/PISTON CARE—Slowly pull recoil starter until resistance is felt due to compression pressure, then stop. Release starter tension slowly to prevent engine from reversing due to compression pressure. This position closes both the intake and exhaust ports which prevents corrosion of the cylinder bore.

4. TIGHTEN FASTENERS AND CLEAN—Tighten screws, bolts, and nuts if necessary. Repair or replace damaged parts. Clean unit thoroughly.

5. STORE SNOWTHROWER—Cover snowthrower and store in a clean, dry place out of the reach of children. **NEVER STORE SNOWTHROWER IN THE HOUSE OR BASEMENT.**

TORO SERVICE SUPPORT

If help—concerning safety, set-up, operation, maintenance, or troubleshooting—is ever needed, contact the local Authorized TORO Service Dealer or Distributor. Refer to the "Yellow Pages" for assistance. In addition to skilled service technicians, the dealer and distributor have factory approved accessories and replacement parts. Keep your TORO all TORO. Buy genuine TORO replacement parts and accessories.

PRODUCT IDENTIFICATION

A model and a serial number decal is located on the rear cross member, above the axle. Always refer to specific numbers on the decal in correspondence or when replacement parts are needed.

MAINTENANCE RECORD

Date	Hours Used					

MAINTENANCE RECORD

DATE	HOURS USED					

The Toro Promise

A Two Year Limited Warranty On All Gasoline Powered Consumer Products

The Toro Company promises to repair these TORO Products if defective in materials or workmanship. The following time periods from the date of purchase apply:

Residential Product ..... 2 Years
Residential Products Used Commercially ..... 45 Days

The cost of parts and labor are included, but the customer pays the transportation costs. Just return any residential product to an Authorized TORO Service Dealer or TORO Distributor.

Should you feel your TORO Product is defective and wish to rely on The Toro Promise, you may return it to:

1. Contact any Authorized TORO Service Dealer, TORO Master Service Dealer, or TORO Distributor. (The Yellow Pages of your telephone directory is a good reference source).
2. He will either instruct you to return the product to him or recommend another Authorized TORO Service outlet which might be more convenient.
3. Bring the product along with your original sales slip, or other evidence of purchase date, to the service dealer.
4. The servicing dealer will inspect the unit, advise you whether the product is defective and, if so, make all repairs necessary to correct the defect without any extra charge to you.

If for any reason you are dissatisfied with the analysis of the defect or the service performed, you may contact us.

Write: TORO Customer Service Dept.
8111 Lyndale Avenue South
Minneapolis, MN 55420

The above remedy of product defects through repair by an Authorized TORO Service Dealer is the purchaser's sole remedy for any defect.

THERE IS NO OTHER EXPRESS WARRANTY. ALL IMPLIED WARRANTIES OF MERCHANTIBILITY AND FITNESS FOR USE ARE LIMITED TO THE DURATION OF THE EXPRESS WARRANTY.

Some states do not allow limitations on how long implied warranty lasts, so the above limitation may not apply to you.

This warranty applies only to parts or components which are defective and does not cover repairs necessary due to normal wear, misuse, accidents, or lack of proper maintenance. Regular, routine maintenance of the unit to keep it in proper operating condition is the responsibility of the owner.

All warranty repairs reimbursable under The Toro Promise must be performed by an Authorized Toro Service Dealer using Toro approved replacement parts.

Repairs or attempted repairs by anyone other than an Authorized TORO Service Dealer are not reimbursable under the TORO Promise. In addition, these unauthorized repair attempts may result in additional malfunctions, the correction of which is not covered by warranty.

THE TORO COMPANY IS NOT LIABLE FOR INDIRECT OR CONSEQUENTIAL DAMAGES IN CONNECTION WITH THE USE OF THE PRODUCT.

Some states do not allow the exclusion of incidental or consequential damages, so the above exclusion may not apply to you.

This warranty gives you specific legal rights, and you may also have other rights which vary from state to state.

COUNTRIES OTHER THAN THE UNITED STATES OR CANADA

Customers who have purchased TORO products exported from the United States or Canada should contact their TORO Distributor (Dealer) to obtain guarantee policies for your country, province, or state. If for any reason you are dissatisfied with your Distributor's service or have difficulty obtaining guarantee information, contact the TORO importer. If all other remedies fail, you may contact us at The Toro Company.