Form No. 3381-467 Rev B

TORO®

Count on it.

Operator's Manual

TimeCutter® ZS 4200S Riding Mower

Model No. 74389—Serial No. 314000001 and Up

Register at www.Toro.com.
Original Instructions (EN)

CE

3381-467 B

⚠ WARNING

CALIFORNIA
Proposition 65 Warning

This product contains a chemical or chemicals known to the State of California to cause cancer, birth defects, or reproductive harm.

The engine exhaust from this product contains chemicals known to the State of California to cause cancer, birth defects, or other reproductive harm.

This machine is a ride-on, rotary-blade lawn mower intended to be used by homeowners in residential applications. It is primarily designed for cutting grass on well-maintained lawns. It is not designed for cutting brush, mowing grass and other growth alongside highways, or for agricultural uses.

This product complies with all relevant European directives; for details, please see the separate product specific Declaration of Conformity (DOC) sheet.

Gross Horsepower

The gross or net horsepower of this engine was laboratory rated by the engine manufacturer in accordance with the Society of Automotive Engineers (SAE) J1940. As configured to meet safety, , and operating requirements, the actual engine torque on this class of mower will be significantly lower.

Go to www.Toro.com to view specifications on your mower model.

This spark ignition system complies with Canadian ICES-002.

Important: This engine is not equipped with a spark arrester muffler. It is a violation of California Public Resource Code Section 4442 to use or operate the engine on any forest-covered, brush-covered, or grass-covered land. Other states or federal areas may have similar laws.

⚠ WARNING

Removing standard original equipment parts and accessories may alter the warranty, traction, and safety of the machine. Failure to use original Toro parts could cause serious injury or death. Making unauthorized changes to the engine, fuel or venting system, may violate regulations.

Replace all parts including, but not limited to, tires, belts, blades, and fuel system components with original Toro parts.

Introduction

Read this information carefully to learn how to operate and maintain your product properly and to avoid injury and product damage. You are responsible for operating the product properly and safely.

You may contact Toro directly at www.Toro.com for product and accessory information, help finding a dealer, or to register your product.

Whenever you need service, genuine Toro parts, or additional information, contact an Authorized Service Dealer or Toro Customer Service and have the model and serial numbers of your product ready. Figure 1 identifies the location of the model and serial numbers on the product. Write the numbers in the space provided.

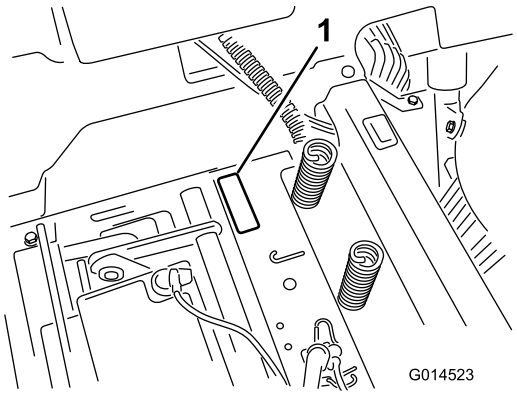

Figure 1
Under the seat

1. Model and serial number plate

Write the product model and serial numbers in the space below:

Model No. _____

Serial No. _____

This manual identifies potential hazards and has safety messages identified by the safety alert symbol (Figure 2), which signals a hazard that may cause serious injury or death if you do not follow the recommended precautions.



Figure 2

1. Safety alert symbol.

This manual uses 2 words to highlight information. **Important** calls attention to special mechanical information and **Note** emphasizes general information worthy of special attention.

© 2014—The Toro® Company
8111 Lyndale Avenue South
Bloomington, MN 55420

Contact us at www.Toro.com.
Printed in the USA.
All Rights Reserved

Contents

Introduction 2
Safety 4
- Safe Operating Practices 4
- Toro Mower Safety 6
- Model 74389 7
- Slope Indicator 8
- Safety and Instructional Decals 9

Product Overview 13
- Controls 13

Operation 14
- Adding Fuel 14
- Checking the Engine-oil Level 16
- Breaking In a New Machine 16
- Think Safety First 16
- Starting the Engine 17
- Operating the Blades 18
- Testing the Safety-interlock System 18
- Stopping the Engine 19
- Driving 19
- Stopping the Machine 20
- Adjusting the Height-of-Cut 21
- Positioning the Seat 21
- Adjusting the Motion-control Levers 21
- Pushing the Machine by Hand 22
- Converting to Side Discharge 22
- Operating Tips 24

Maintenance 26
- Recommended Maintenance Schedule(s) 26
- Premaintenance Procedures 27
  - Raising the Seat 27
- Lubrication 27
  - Greasing the Bearings 27
- Engine Maintenance 28
  - Servicing the Air Cleaner 28
  - Servicing the Engine Oil 28
  - Servicing the Spark Plug 30
  - Cleaning the Cooling System 31
  - Cleaning the Blower Housing 31
- Fuel System Maintenance 32
  - Replacing the In-line Fuel Filter 32
- Electrical System Maintenance 33
  - Charging the Battery 33
  - Servicing the Fuses 34
- Drive System Maintenance 35
  - Checking the Tire Pressure 35
  - Releasing the Electric Brake 35
- Mower Maintenance 36
  - Servicing the Cutting Blades 36
  - Leveling the Mower Deck 38
  - Removing the Mower 41
  - Installing the Mower 42
  - Replacing the Grass Deflector 42
- Mower Belt Maintenance 43
  - Inspecting the Belts 43
  - Replacing the Mower Belt 43
- Cleaning 44
  - Washing the Underside of the Mower 44

Storage 45
- Cleaning and Storage 45

Troubleshooting 46
Schematics 48

Safety

Improperly using or maintaining this mower can result in injury. To reduce the potential for injury, comply with these safety instructions.

Toro designed and tested this mower for reasonably safe service; however, failure to comply with the following instructions may result in personal injury.

To ensure maximum safety, best performance, and to gain knowledge of the product, it is essential that you and any other operator of the mower read and understand the contents of this manual before the engine is ever started. Pay particular attention to the safety alert symbol (Figure 2) which means Caution, Warning, or Danger—"personal safety instruction." Read and understand the instruction because it has to do with safety. Failure to comply with the instruction may result in personal injury.

Safe Operating Practices

The following instructions have been adapted from the standard EN836:1997.

Training

- Read the *Operator's Manual* and other training material.

  Note: If the operator(s) or mechanic(s) cannot read the manual language, it is the owner's responsibility to explain this material to them.

- Become familiar with the safe operation of the equipment, operator controls, and safety signs.

- All operators and mechanics should be trained. The owner is responsible for training the users.

- Never let children or untrained people operate or service the equipment.

  Note: Local regulations may restrict the age of the operator.

- The owner/user can prevent and is responsible for accidents or injuries occurring to himself or herself, other people, or damage to property.

Preparation

- Evaluate the terrain to determine what accessories and attachments are needed to properly and safely perform the job. Only use accessories and attachments approved by the manufacturer.

- Wear appropriate clothing; including a hard hat, safety glasses, long pants, safety shoes, gloves, and hearing protection.

  Important: Long hair, loose clothing or jewelry may get tangled in moving parts.

- Inspect the area where the equipment is to be used and ensure that all objects are removed from the machine before use.

- Use extra care when handling fuels. They are flammable and vapors are explosive.

  – Use only an approved container.

  – Do not remove the fuel cap or add fuel with the engine running. Allow the engine to cool before refueling. Do not smoke near the machine when the engine is running.

  – Do not refuel or drain the machine indoors.

- Check that the operator's presence controls, safety switches, and shields are attached and functioning properly. Do not operate the machine unless they are functioning properly.

Operation

- Lightning can cause severe injury or death. If lightning is seen, or thunder is heard in the area, do not operate the machine; seek shelter.

- Do not run an engine in an enclosed area.

- Only operate in well-lit areas, keeping away from holes and hidden hazards.

- Ensure that all drives are in neutral and that the parking brake is engaged before starting engine. Only start the engine from the operator's position.

- Make sure that you have good footing while using this machine, especially when backing up.

  Note: Reduced footing could cause slipping.

- Slow down and use extra care on hillsides. Be sure to travel side to side on hillsides. Turf conditions can affect the stability of the machine. Use caution while operating near drop-offs.

- Slow down and use caution when making turns and when changing directions on slopes.

- Do not raise the mower deck with the blades running.

- Do not operate the machine without the PTO shield or other guards securely in place. Be sure all interlocks are attached, adjusted properly, and functioning properly.

- Do not operate with the discharge deflector raised, removed or altered, unless using a grass catcher.

- Do not change the engine governor setting or overspeed the engine.
- Stop on level ground, disengage drives, engage the parking brake (if provided), shut off the engine before leaving the operator's position for any reason, including emptying the catchers or unclogging the chute.
- Stop equipment and inspect the blades after striking objects or if an abnormal vibration occurs. Make the necessary repairs before resuming operations.
- Keep your hands and feet away from the cutting unit.
- Look behind and down before backing up to ensure a clear path.
- Keep pets and bystanders away from an operating machine.
- Slow down and use caution when making turns and crossing roads and sidewalks. Stop the blades if you are not mowing.
- Be aware of the mower-discharge direction and do not point it at anyone.
- Do not operate the mower under the influence of alcohol or drugs.
- Use care when loading or unloading the machine into or from a trailer or truck.
- Use care when approaching blind corners, shrubs, trees, or other objects that may obscure vision.

Safe Handling of Fuels

- To avoid personal injury or property damage, use extreme care in handling gasoline. Gasoline is extremely flammable and the vapors are explosive.
- Extinguish all cigarettes, cigars, pipes, and other sources of ignition.
- Use only an approved fuel container.
- Do not remove the fuel cap or add fuel with the engine running.
- Allow the engine to cool before fueling.
- Do not fuel the machine indoors.
- Do not store the machine or fuel container where there is an open flame, spark, or pilot light such as on a water heater or on other appliances.
- Do not fill containers inside a vehicle, on a truck, or on a trailer bed with a plastic liner. Always place containers on the ground away from your vehicle before filling.
- Remove equipment from the truck or trailer and fuel it on the ground. If this is not possible, then add fuel with such equipment as a portable container, rather than from a fuel dispenser nozzle.
- Keep the nozzle in contact with the rim of the fuel tank or container opening at all times until fueling is complete. Do not use a nozzle lock open device.
- If fuel is spilled on clothing, change your clothing immediately.
- Do not overfill fuel tank. Replace fuel cap and tighten securely.

Maintenance and Storage

- Disengage drives, set the parking brake, stop the engine, and remove the key or disconnect spark-plug wire. Wait for all movement to stop before adjusting, cleaning, or repairing.
- Clean grass and debris from the cutting unit, drives, mufflers, and engine to help prevent fires.
- Clean up oil or fuel spillage.
- Let the engine cool before storing.
- Do not store fuel near flames or drain indoors.
- Do not allow untrained personnel to service machine.
- Use jack stands to support components when required.
- Carefully release pressure from components with stored energy.
- Disconnect the battery or remove the spark-plug wire before making any repairs. Disconnect the negative terminal first and the positive terminal last. Reconnect the positive first and negative last.
- Use care when checking the blades. Wrap the blade(s) or wear gloves, and use caution when servicing them. Only replace blades; do not straighten or weld them.
- Keep hands and feet away from moving parts. If possible, do not make adjustments with the engine running.
- Keep all parts in good working condition and all hardware tightened. Replace all worn or damaged decals.

Hauling

- Use care when loading or unloading the machine into a trailer or a truck.
- Use full-width ramps for loading machine into a trailer or a truck.
- Tie the machine down securely using straps, chains, cable, or ropes. Both front and rear straps should be directed down and outward from the machine.

Toro Mower Safety

The following list contains safety information specific to Toro products and other safety information you must know.

This product is capable of amputating hands and feet, and throwing objects. Always follow all safety instructions to avoid serious injury or death.

This product is designed for cutting and recycling grass, or, when equipped with a grass bagger, for catching cut grass. Any use for purposes other than these could prove dangerous to the user and bystanders.

General Operation

- Be sure that the area is clear of bystanders before mowing. Stop the machine if anyone enters the area.
- Do not touch equipment or attachment parts which may be hot from operation. Allow all of the parts to cool before attempting to maintain, adjust, or service the machine.
- Use only Toro-approved attachments. Warranty may be voided if used with any unapproved attachments.
- Check carefully for overhead clearances (i.e. branches, doorways, electrical wires, etc.) before operating under any objects, and do not contact them.
- Slow down before making turns and use extra caution.
- Use caution when riding the platform over curbs, rocks, roots, or other obstructions.
- Look behind and down before backing up to ensure a clear path. Use extra care when operating in reverse.
- Do not jerk the controls; use a steady motion.
- When loading or unloading the machine, use one full-width ramp that is wide enough to extend beyond the width of the machine.
- Do not carry passengers.
- Do not carry equipment on the machine.

Slope Operation

All slopes and ramps require extra caution. If you feel uneasy on a slope, do not mow it.

- Remove obstacles such as rocks, tree limbs, etc. from the mowing area.
- Watch for holes, ruts or bumps.

  Note: Tall grass can hide obstacles.
- Use caution near drop-offs, ditches, or embankments.

  Note: The machine could suddenly turn over if a wheel goes over the edge of a cliff or ditch, or if an edge caves in.
- Use extra care with grass catchers or other attachments.

  Note: These can change the stability of the machine.
- Keep all movement on slopes slow and gradual.
- Do not make sudden changes in speed or direction.
- Mow slopes side to side.
- Do not mow slopes greater than 15 degrees.

Towing Safety

- Do not attach towed equipment except at the hitch point.
- Follow the attachment manufacturer's recommendation for weight limits for towed equipment and towing on slopes. Towed weight must not exceed the weight of the machine, operator, and ballast. Use counterweights or wheel weights as described in the attachment, or in the pulling machine *Operator's Manual*.
- Never allow children or others in or on towed equipment.
- On slopes, the weight of the towed equipment may cause loss of traction, increased risk of rollover, and loss of control. Reduce the towed weight and slow down.
- Stopping distance increases with the weight of the towed load. Travel slowly and allow extra distance to stop.
- Make wide turns to keep the attachment clear of the machine.

Service

- Do not store the machine or a fuel container inside where there is an open flame, such as near a water heater or furnace.
- Keep the nuts and bolts tight, especially the blade-attachment bolts.
- Never remove or tamper with safety devices. Check their proper operation regularly. Never do anything to interfere with the intended function of a safety device or to reduce the protection provided by a safety device.
- To best protect your investment and maintain optimal performance of your Toro equipment, count on Toro genuine parts. When it comes to reliability, Toro delivers replacement parts designed to the exact engineering

specifications of our equipment. For peace of mind, insist on Toro genuine parts.

- Check brake operation frequently. Adjust and service as required.

Model 74389

Sound Pressure

This unit has a sound pressure level at the operator's ear of 88 dBA, which includes an Uncertainty Value (K) of 1 dBA.

Sound power level was determined according to the procedures outlined in EN 836.

Sound Power

This unit has a guaranteed sound power level of 100 dBA, which includes an Uncertainty Value (K) of 1 dBA.

Sound power level was determined according to the procedures outlined in ISO 11094.

Vibration

Measured vibration level for right hand = 2.5 m/s^2

Measured vibration level for left hand = 2.7 m/s^2

Uncertainty Value (K) =1.4 m/s^2

Measured values were determined according to the procedures outlined in EN 836.

Whole Body Vibration

Measured vibration level = 0.30 m/s^2

Uncertainty Value (K) = 0.15 m/s^2

Measured values were determined according to the procedures outlined in EN 836 (Riding and Stand-Ons).

Slope Indicator

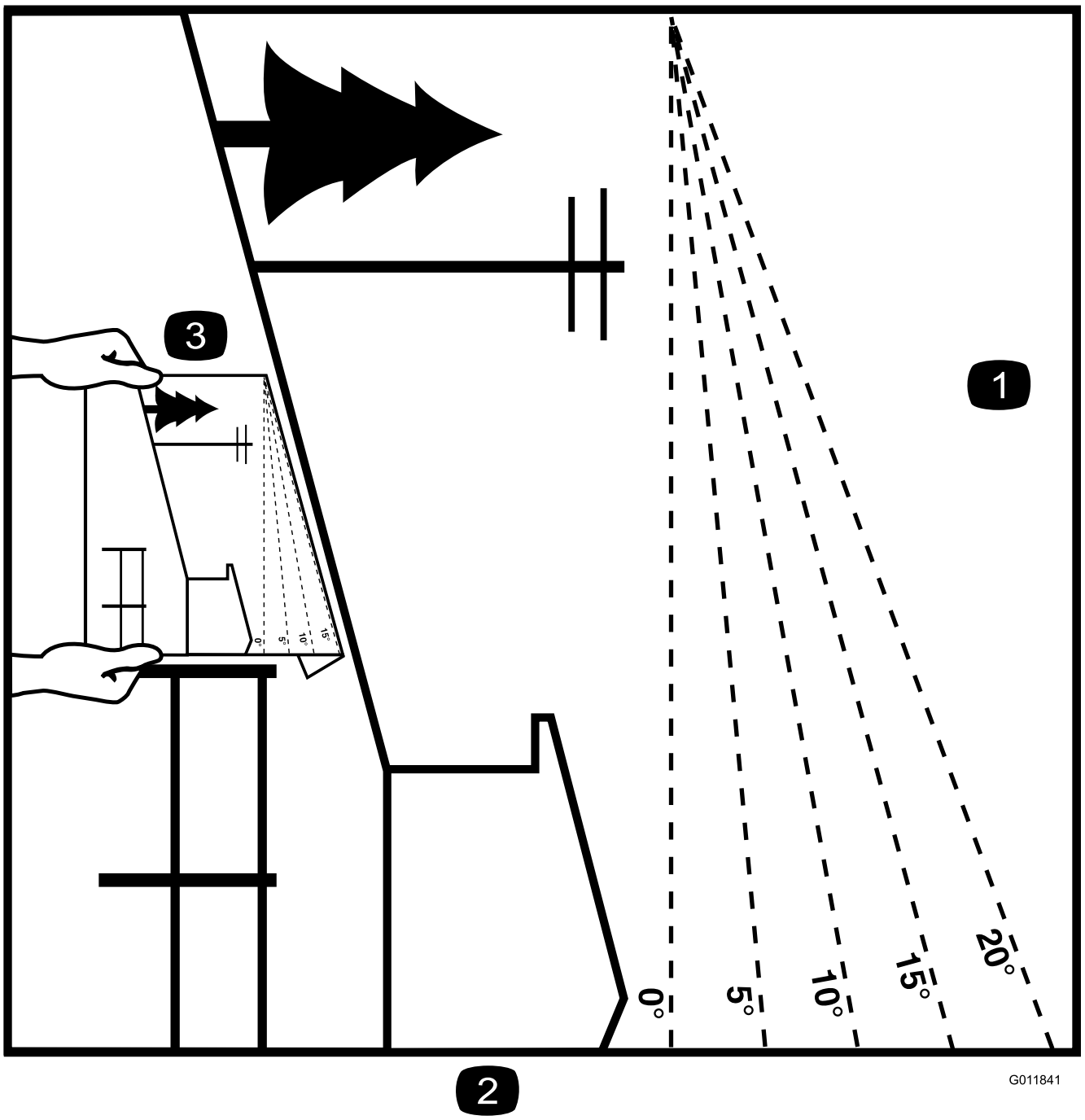

Figure 3

This page may be copied for personal use.

1. The maximum slope you can safely operate the machine on is **15 degrees**. Use the slope chart to determine the degree of slope of hills before operating. **Do not operate this machine on a slope greater than 15 degrees.** Fold along the appropriate line to match the recommended slope.
2. Align this edge with a vertical surface, a tree, building, fence pole, etc.
3. Example of how to compare slope with folded edge.

Safety and Instructional Decals

Safety decals and instructions are easily visible to the operator and are located near any area of potential danger. Replace any decal that is damaged or lost.

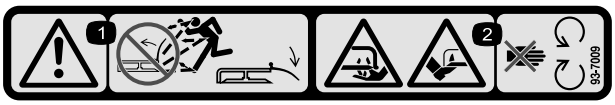

93-7009

1. Warning—don't operate the mower with the deflector up or removed; keep the deflector in place.
2. Cutting/dismemberment hazard of hand or foot, mower blade—stay away from moving parts.

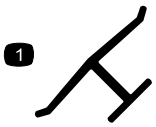

Manufacturer's Mark

1. Indicates the blade is identified as a part from the original machine manufacturer.

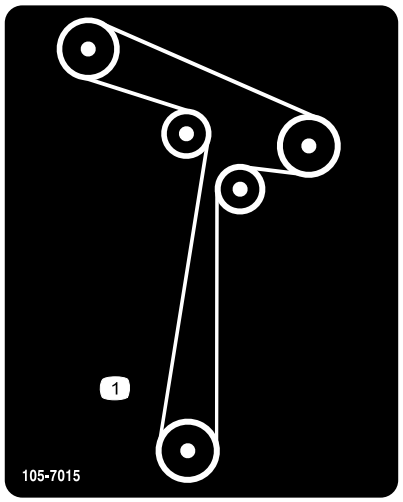

105-7015

For models with 42-inch decks

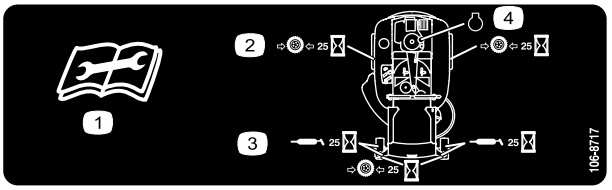

106-8717

1. Read the instructions before servicing or performing maintenance.
2. Check tire pressure every 25 operating hours.
3. Grease every 25 operating hours.
4. Engine

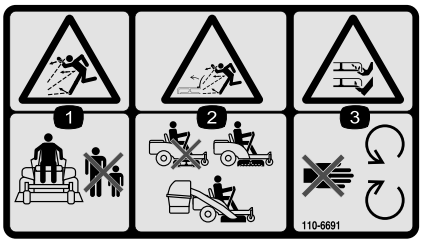

110-6691

1. Thrown object hazard—keep bystanders a safe distance from the machine.
2. Thrown object hazard, mower—do not operate without the deflector, discharge cover, or grass collection system in place.
3. Cutting/dismemberment of hand or foot—stay away from moving parts.

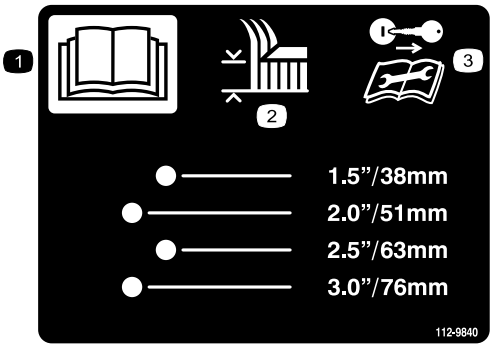

112-9840

1. Read the *Operator's Manual*.
2. Height of cut
3. Remove the ignition key and read the instructions before servicing or performing maintenance.

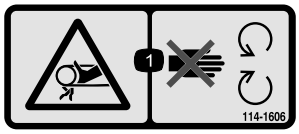

114-1606

1. Entanglement hazard, belt—keep all guards in place.

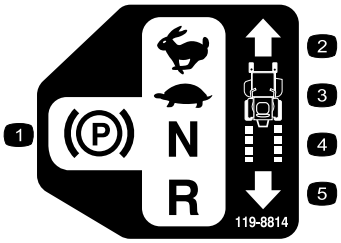

119-8814

1. Parking position
2. Fast
3. Slow
4. Neutral
5. Reverse

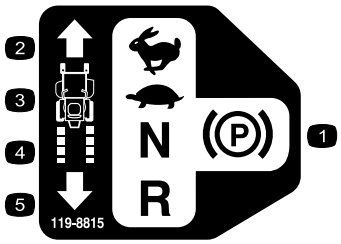

119-8815

1. Parking position
2. Fast
3. Slow
4. Neutral
5. Reverse

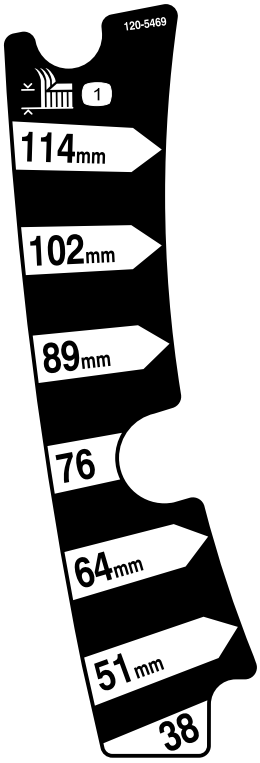

120-5469

1. Height-of-cut

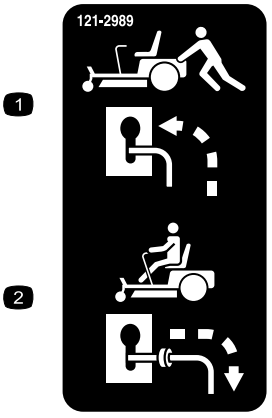

121-2989

1. Bypass lever position for pushing the machine
2. Bypass lever position for operating the machine



Battery Symbols

Some or all of these symbols are on your battery

1. Explosion hazard
2. No fire, open flame, or smoking.
3. Caustic liquid/chemical burn hazard
4. Wear eye protection
5. Read the *Operator's Manual.*
6. Keep bystanders a safe distance from the battery.
7. Wear eye protection; explosive gases can cause blindness and other injuries
8. Battery acid can cause blindness or severe burns.
9. Flush eyes immediately with water and get medical help fast.
10. Contains lead; do not discard.

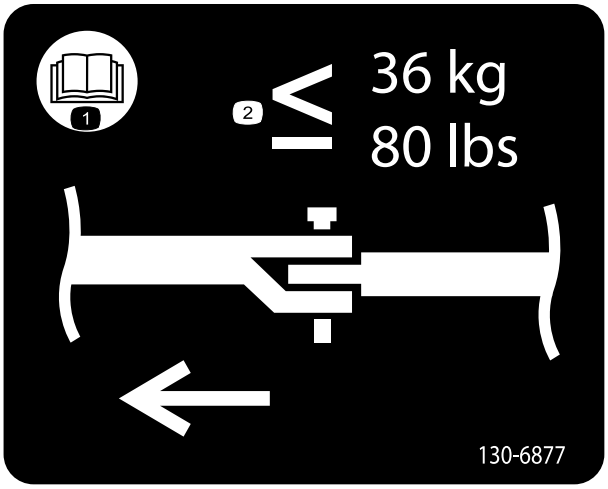

130-6877

1. Read the *Operator's Manual*
2. The maximum drawbar pull is 36 kg (80 lbs).

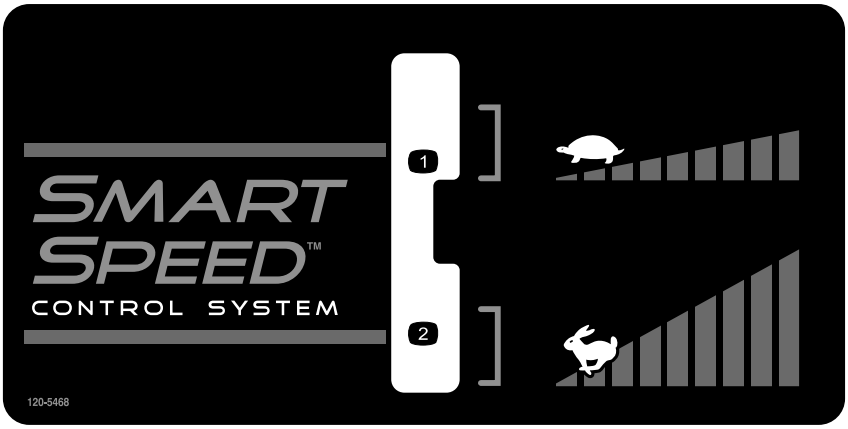

120-5468

1. Slow speed
2. Fast speed

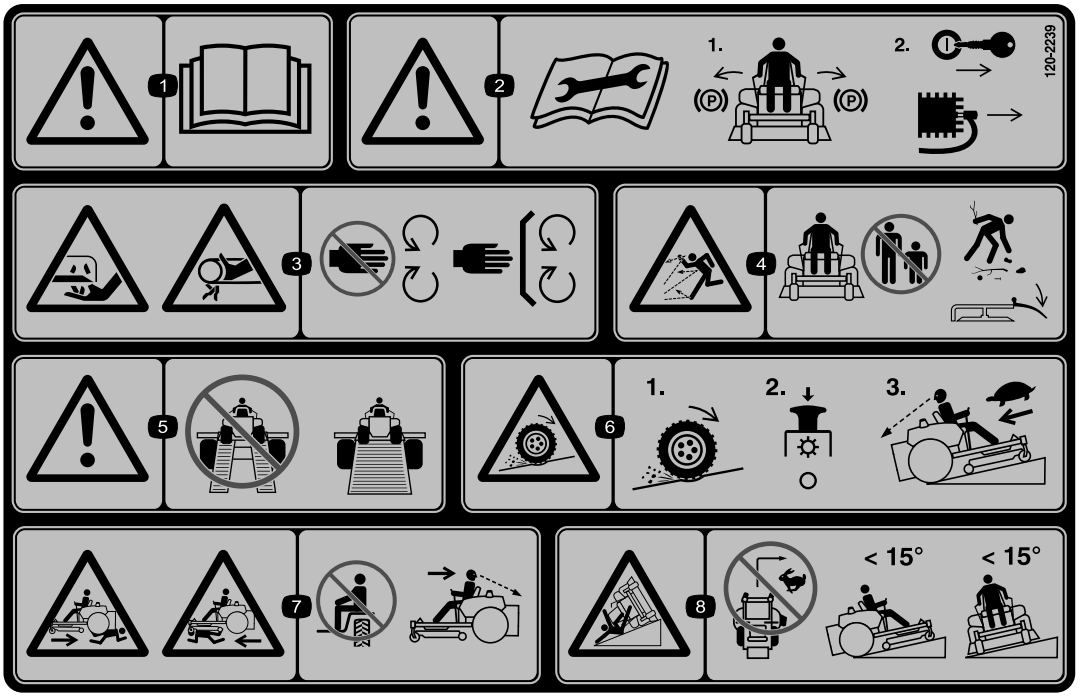

120-2239

1. Warning—read the *Operator's Manual.*
2. Warning—read the instructions before servicing or performing maintenance; move the motion control levers to the park (brake) position, remove the ignition key and disconnect the spark plug wire.
3. Cutting/dismemberment hazard, mower blade; entanglement hazard, belt—stay away from moving parts, keep all guards and shields in place.
4. Thrown object hazard—keep bystanders a safe distance from the machine, pick up debris before operating, keep deflector in place.
5. Warning—do not use split ramps, use a full ramps when transporting machine.
6. Loss of traction/control hazard, slopes—loss of traction/control on a slope, disengage the blade control switch (PTO), proceed off the slope slowly.
7. Crushing/dismemberment hazard of bystanders, reversing; crushing/dismemberment hazard of bystanders—do not carry passengers, look behind and down when reversing.
8. Tipping hazard—do not mow slopes greater than 15 degrees, avoid sudden and sharp turns while on slopes.

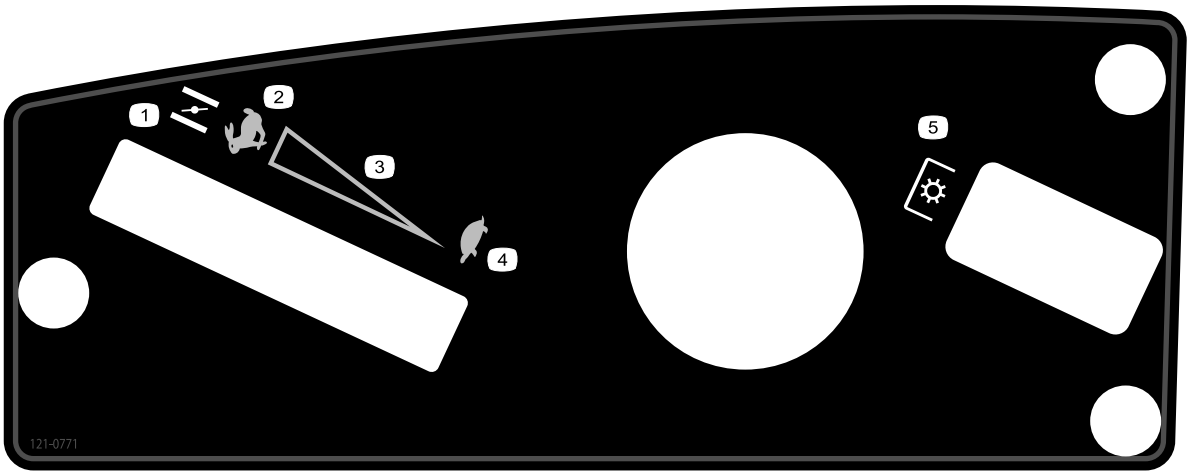

121-0771

1. Choke
2. Fast
3. Continuous variable setting
4. Slow
5. Power take-off (PTO), Blade control switch

Product Overview

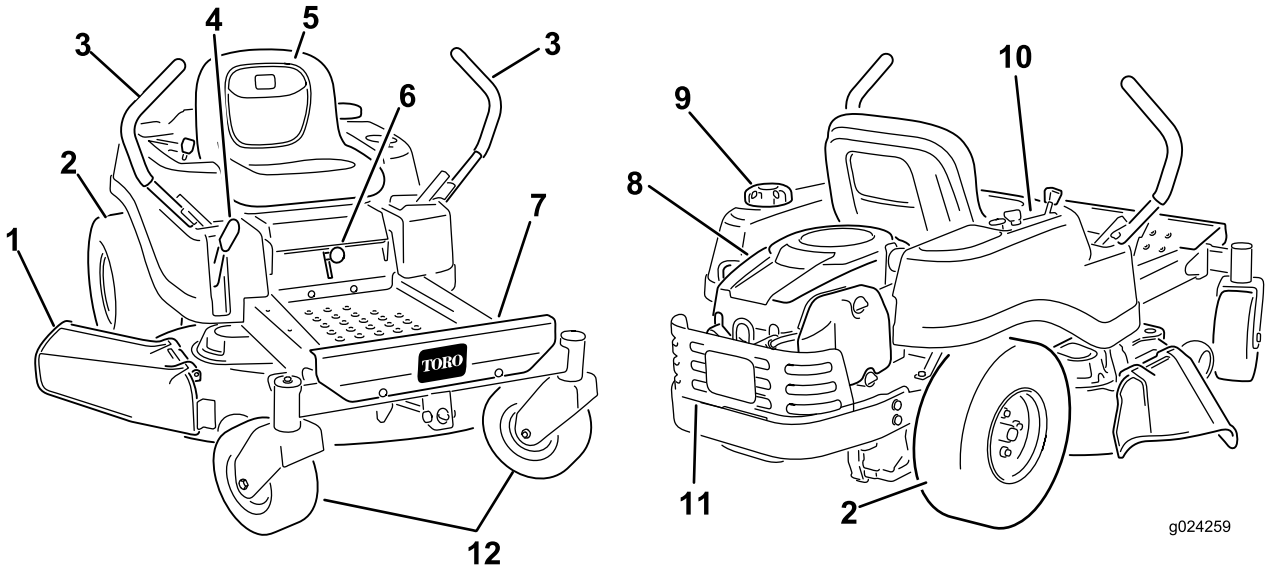

Figure 4

1. Deflector
2. Rear drive wheel
3. Motion-control levers
4. Height-of-cut lever
5. Operator seat
6. Smart Speed™ lever
7. Footrest
8. Engine
9. Fuel-tank cap
10. Control panel
11. Engine guard
12. Front caster wheels

Controls

Become familiar with all of the controls in Figure 4 andFigure 5 before you start the engine and operate the machine.

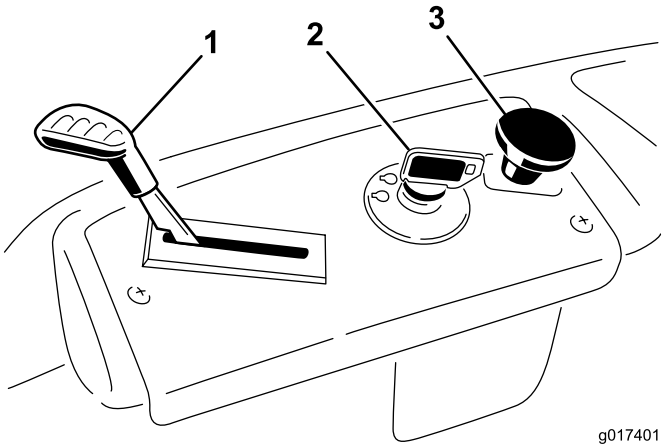

Figure 5
Control Panel

1. Throttle/Choke
2. Ignition switch
3. Blade-control switch (power take-off)

Ignition Switch

The ignition switch has 3 positions: Off, Run, and Start. The key will turn to Start and move back to Run upon release. Turning the key to the Off position will stop the engine; however, always remove the key when leaving the machine to prevent someone from accidentally starting the engine (Figure 5).

Throttle/Choke Control

The throttle and choke is combined into one control lever. The throttle controls the engine speed and it has a continuous variable setting from Slow to Fast. Engage the choke by moving the lever past the Fast setting until it stops (Figure 5).

Blade-control Switch (Power Take-Off)

The blade-control switch, represented by a power take-off (PTO) symbol, engages and disengages power to the mower blades (Figure 5).

Motion-control Levers and Park Position

The motion-control levers are speed-sensitive controls of independent wheel motors. Moving a lever forward or backward turns the wheel on the same side forward or in reverse; wheel speed is proportional to the amount the lever is moved. Move the control levers outward from the center to the park position and exit the machine (Figure 17). Always position the motion-control levers into the park position when you stop the machine or leave it unattended.

Smart Speed™ Control-System Lever

The Smart Speed™ Control-System lever, located below the operating position, gives the operator a choice to drive the machine at 2 speed ranges—high and low (Figure 6).

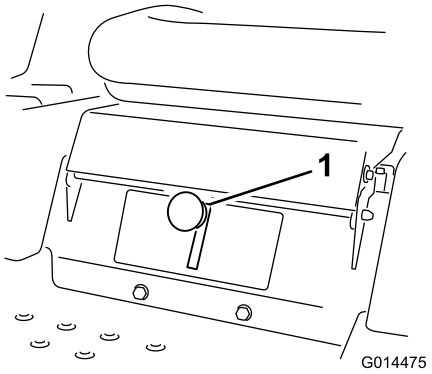

Figure 6

1. Smart-speed lever

Fuel-presence window

The fuel-presence window located on the left hand side of the machine can be used to verify the presence of gasoline in the tank (Figure 7).

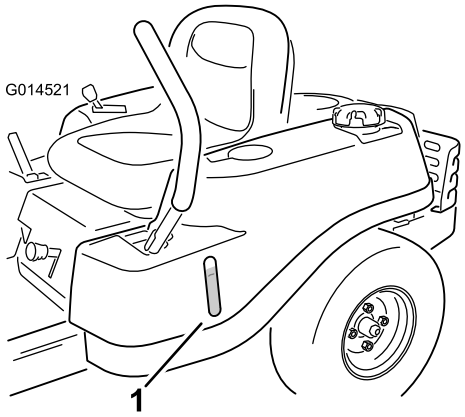

Figure 7

1. Fuel-presence window

Height-of-Cut Lever

The height-of-cut lever allows the operator to lower and raise the deck from the seated position. When the lever is moved up (toward the operator), the deck is raised from the ground and when moved down (away from the operator), it is lowered toward the ground. Only adjust the height-of-cut while the machine is not moving (Figure 21).

Operation

Note: Determine the left and right sides of the machine from the normal operating position.

Adding Fuel

- For best results, use only clean, fresh (less than 30 days old), unleaded gasoline with an octane rating of 87 or higher ((R+M)/2 rating method).
- **Ethanol**: Gasoline with up to 10% ethanol (gasohol) or 15% MTBE (methyl tertiary butyl ether) by volume is acceptable. Ethanol and MTBE are not the same. Gasoline with 15% ethanol (E15) by volume is not approved for use. **Never use gasoline that contains more than 10% ethanol by volume**, such as E15 (contains 15% ethanol), E20 (contains 20% ethanol), or E85 (contains up to 85% ethanol). Using unapproved gasoline may cause performance problems and/or engine damage which may not be covered under warranty.
- **Do not** use gasoline containing methanol.
- **Do not** store fuel either in the fuel tank or fuel containers over the winter unless a fuel stabilizer is used.
- **Do not** add oil to gasoline.

⚠ DANGER

In certain conditions, gasoline is extremely flammable and highly explosive. A fire or explosion from gasoline can burn you and others and can damage property.

- **Fill the fuel tank outdoors, in an open area, when the engine is cold. Wipe up any gasoline that spills.**
- **Never fill the fuel tank inside an enclosed trailer.**
- **Do not fill the fuel tank completely full. Add gasoline to the fuel tank until the level is 6 to 13 mm (1/4 to 1/2 inch) below the bottom of the filler neck. This empty space in the tank allows gasoline to expand.**
- **Never smoke when handling gasoline, and stay away from an open flame or where gasoline fumes may be ignited by a spark.**
- **Store gasoline in an approved container and keep it out of the reach of children. Never buy more than a 30-day supply of gasoline.**
- **Do not operate without entire exhaust system in place and in proper working condition.**

⚠ DANGER

In certain conditions during fueling, static electricity can be released causing a spark which can ignite the gasoline vapors. A fire or explosion from gasoline can burn you and others and can damage property.

- **Always place gasoline containers on the ground away from your vehicle before filling.**
- **Do not fill gasoline containers inside a vehicle or on a truck or trailer bed because interior carpets or plastic truck bed liners may insulate the container and slow the loss of any static charge.**
- **When practical, remove gas-powered equipment from the truck or trailer and refuel the equipment with its wheels on the ground.**
- **If this is not possible, then refuel such equipment on a truck or trailer from a portable container, rather than from a gasoline dispenser nozzle.**
- **If a gasoline dispenser nozzle must be used, keep the nozzle in contact with the rim of the fuel tank or container opening at all times until fueling is complete.**

⚠ WARNING

Gasoline is harmful or fatal if swallowed. Long-term exposure to vapors can cause serious injury and illness.

- **Avoid prolonged breathing of vapors.**
- **Keep face away from nozzle and gas tank or conditioner bottle opening.**
- **Avoid contact with skin; wash off spillage with soap and water.**

Using Stabilizer/Conditioner

Use a fuel stabilizer/conditioner in the machine to provide the following benefits:

- Keeps gasoline fresh during storage of 90 days or less. For longer storage it is recommended that the fuel tank be drained.
- Cleans the engine while it runs
- Eliminates gum-like varnish buildup in the fuel system, which causes hard starting

Important: Do not use fuel additives containing methanol or ethanol.

Add the correct amount of gas stabilizer/conditioner to the gas.

Note: A fuel stabilizer/conditioner is most effective when mixed with fresh gasoline. To minimize the chance of varnish deposits in the fuel system, use fuel stabilizer at all times.

Filling the Fuel Tank

Ensure that the engine is shut off and the motion controls are in the parked position.

Important: Do not overfill fuel tank. Fill the fuel tank to the bottom of the filler neck. The empty space in the tank allows the fuel to expand. Overfilling may result in fuel leakage, damage to the engine, or damage to the emissions system.

1. Clean around the fuel-tank cap and remove the cap.

   Note: You can use the fuel window to verify the presence of gasoline before filling the tank (Figure 8).

2. **Slowly** add gasoline until the fuel reaches the base of the filler neck (Figure 8).

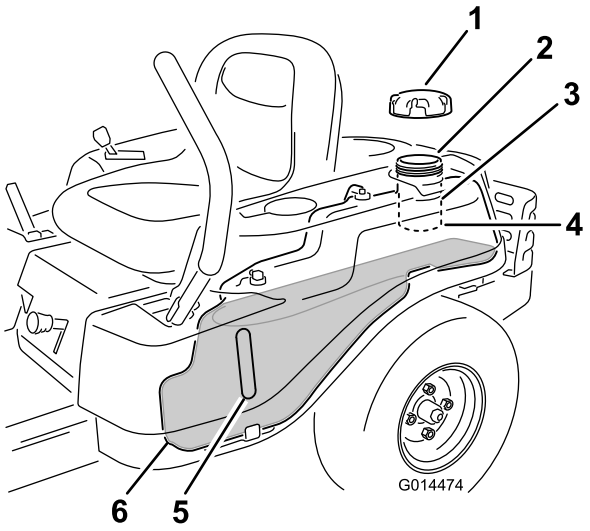

Figure 8

1. Fuel-tank cap
2. Fill opening
3. Filler neck
4. Base of the filler neck **(do not fill past here)**
5. Fuel window
6. End of the fuel tank

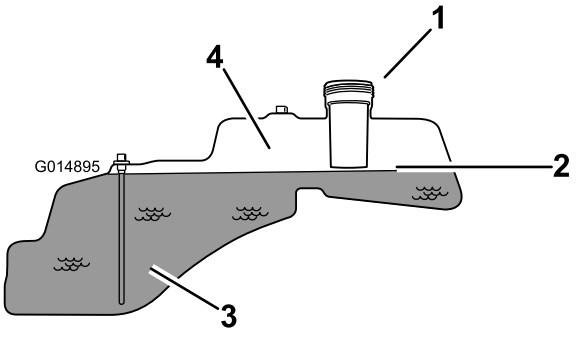

Figure 9

1. Fill opening
2. Base of the filler neck **(do not fill past here)**
3. Fuel
4. Empty space (for fuel expansion)

3. Install the fuel-tank cap securely, and tighten until it clicks.

Checking the Engine-oil Level

Before you start the engine and use the machine, check the oil level in the engine crankcase; refer to Checking the Engine-oil Level (page 28).

Breaking In a New Machine

New engines take time to develop full power. Mower decks and drive systems have higher friction when new, placing additional load on the engine. Allow 40 to 50 hours of break-in time for new machines to develop full power and best performance.

Think Safety First

Operating Safety

Please carefully read all of the safety instructions and decals in the safety section. Knowing this information could help you, your family, pets, or bystanders avoid injury.

⚠ DANGER

Mowing on wet grass or steep slopes can cause sliding and loss of control.

Wheels dropping over edges can cause rollovers, which may result in serious injury, death, or drowning.

A loss of traction is a loss of steering control.

To avoid loss of control and possibility of rollover:

- **Do not mow near drop-offs or near water.**
- **Do not mow slopes greater than 15 degrees.**
- **Reduce the speed and use extreme caution on slopes.**
- **When mowing slopes, gradually work from lower to higher areas on the incline.**
- **Avoid sudden turns or rapid speed changes.**
- **Turn up, into an incline when changing directions on slopes. Turning down the slope reduces traction.**
- **Attachments change the handling characteristics of the machine. Use extra caution when using attachments with the machine.**

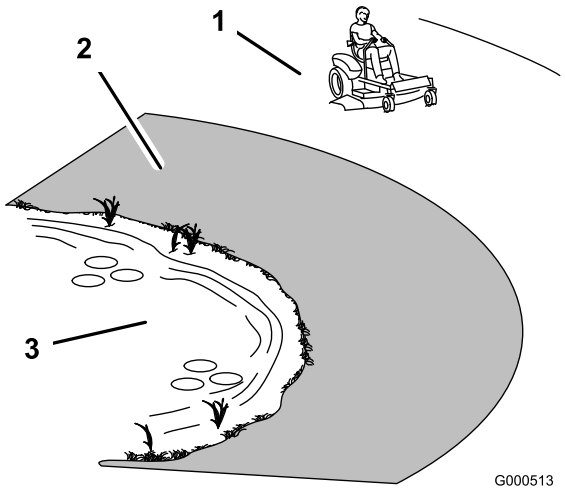

Figure 10

1. Safe zone—use the TimeCutter here
2. Use a walk-behind mower and/or hand trimmer near drop-offs and water.
3. Water

⚠ CAUTION

This machine produces sound levels in excess of 85 dBA at the operators ear and can cause hearing loss through extended periods of exposure.

Wear hearing protection when operating this machine.

The use of protective equipment for eyes, ears, feet, and head is recommended.

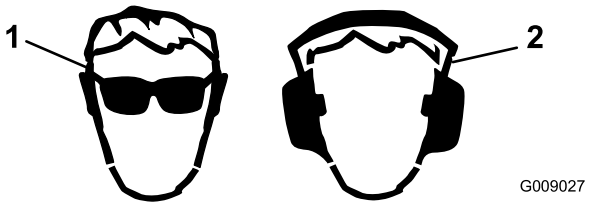

Figure 11

1. Wear safety glasses
2. Wear hearing protection

Understanding the Safety-interlock System

⚠ WARNING

If safety-interlock switches are disconnected or damaged, the machine could operate unexpectedly causing personal injury.

- **Do not tamper with the interlock switches.**
- **Check the operation of the interlock switches daily, and replace any damaged switches before operating the machine.**

The safety-interlock system is designed to prevent the engine from starting unless:

- The blades are disengaged.
- The motion-control levers are in the park position.

The safety-interlock system also is designed to stop the engine whenever the control levers are out of the park position and you rise from the seat.

Starting the Engine

1. Sit down on the seat, and move the motion controls outward to the park position.
2. Disengage the blades by moving the blade control switch to Off (Figure 12)

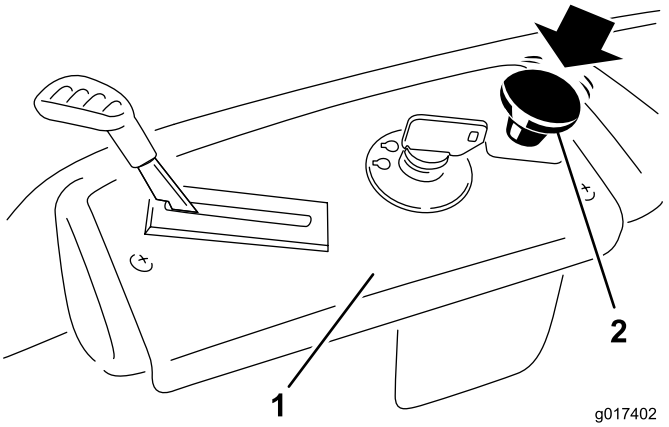

Figure 12

1. Control panel
2. Blade-control switch—Off position

3. Pull up on the Choke control before starting a cold engine (Figure 13).

   Note: A warm or hot engine may not require choking.

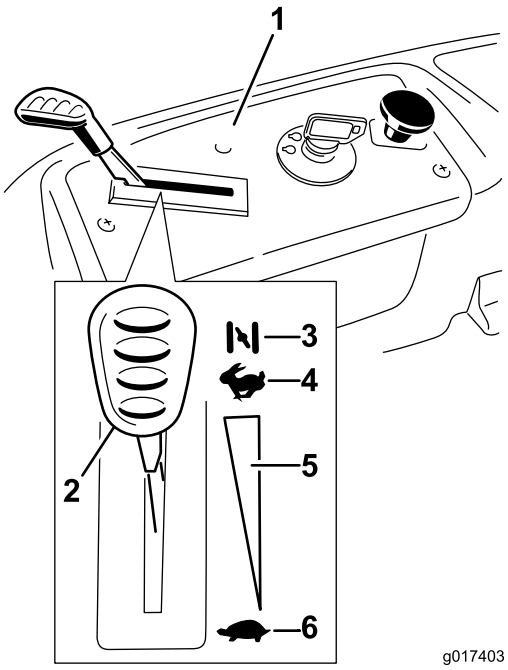

Figure 13

1. Control panel
2. Throttle
3. Fast
4. Continuous-variable setting
5. Slow
6. Choke control

4. Turn the ignition key to Start to energize the starter (Figure 14).

Note: When the engine starts, release the key.

Important: Do not engage the starter for more than 10 seconds at a time. If the engine fails to start, allow a 60 second cool-down period between attempts. Failure to follow these instructions can damage the starter motor.

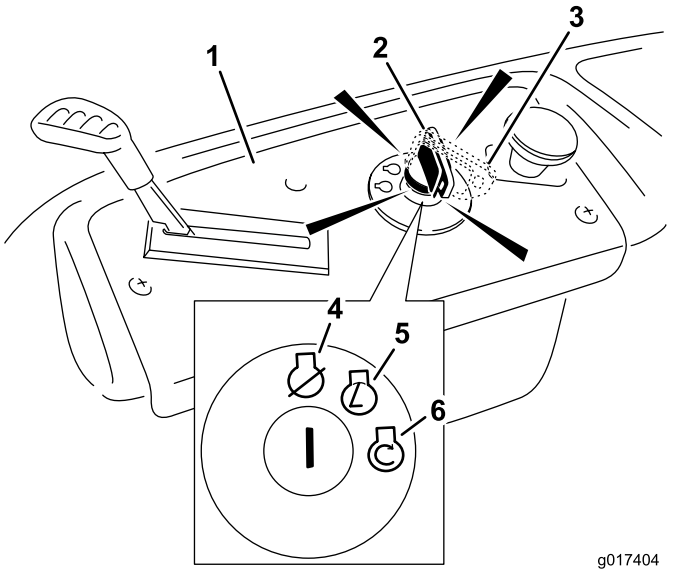

Figure 14

1. Control panel
2. Ignition key—run position
3. Ignition key—start position
4. Off
5. Run
6. Start
7. Choke control

5. After the engine starts, push down on the Choke control (Figure 14).

   Note: If the engine stalls or hesitates, pull up on the Choke control, and let the engine run for a few seconds. Then, push down on the Choke control. Repeat this as required.

Operating the Blades

The blade-control switch, represented by a power take-off (PTO) symbol, engages and disengages power to the mower blades. This switch controls power to any attachments that draw power from the engine, including the mower deck and cutting blades.

Engaging the Blades

Important: Do not engage the blades when parked in tall grass. Belt or clutch damage can occur.

1. Release pressure on the motion-control levers and place the machine in neutral.
2. Move the throttle to the Fast position.

   Note: Always engage the blades with the throttle in the Fast position.

3. Pull up on the blade-control switch to move it to the On position, and engage the blades (Figure 15).

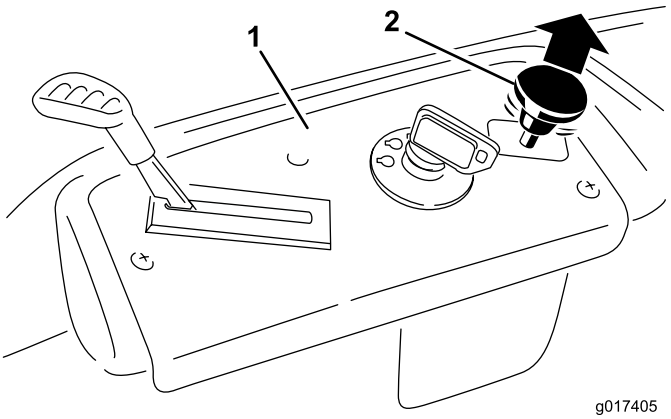

Figure 15

1. Control panel
2. Blade-control switch—On position

Disengaging the Blades

Push down on the blade-control switch to move it to the Off position, and disengage the blades (Figure 16).

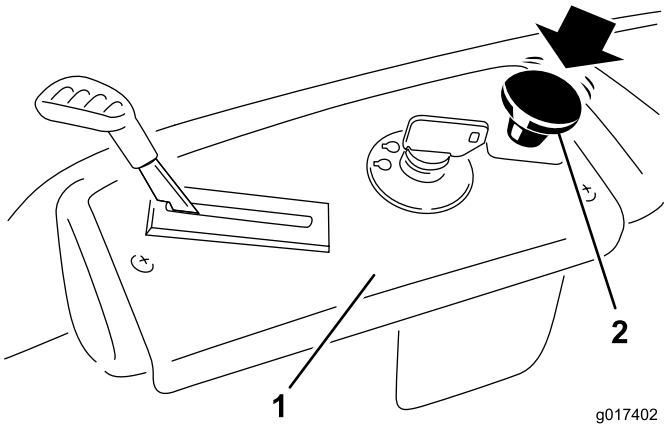

Figure 16

1. Control panel
2. Blade-control switch—Off

Testing the Safety-interlock System

Test the safety-interlock system before you use the machine each time. If the safety system does not operate as described below, have an Authorized Service Dealer repair the safety system immediately.

1. While sitting on the seat, with the control levers in park position, and move the blade-control switch to On.
2. Try starting the engine; the engine should not crank.
3. While sitting on the seat, move the blade-control switch to Off.

4. Move either motion-control lever to the center, unlocked position.
5. Try starting the engine; the engine should not crank.
6. Repeat with the other motion-control lever.
7. While sitting on the seat, move the blade-control switch to Off, and lock the motion-control levers in the park position.
8. Start the engine.
9. While the engine is running, engage the blade-control switch, and rise slightly from the seat.

   Note: The engine should stop.
10. While sitting on the seat, move the blade-control switch to Off, and lock the motion-control levers in the park position.
11. Start the engine.
12. While the engine is running, move the motion-control levers to the center, unlocked position, engage the blade-control switch, and rise slightly from the seat.

    Note: The engine should stop.

Stopping the Engine

1. Disengage the blades by moving the blade-control switch to Off (Figure 16).
2. Move the throttle lever to Fast (Figure 13).
3. Turn the ignition key to Off (Figure 14) and remove the key.

Driving

Driving the machine benefits from an understanding of what zero-turn-radius mower means. The drive wheels turn independently, powered by hydraulic motors on each axle; hence one side can turn in reverse while the other turns forward causing the machine to spin rather than turn. This vastly improves the machine maneuverability but may require some adjustment if the operator is unfamiliar.

⚠ WARNING

The machine can spin very rapidly. The operator may lose control of the machine and cause personal injury or damage to the machine.

- **Use caution when making turns.**
- **Slow the machine down before making sharp turns.**

The throttle control regulates the engine speed as measured in rpm (revolutions per minute). Placing the throttle control in the Fast position can be best for performance. For most applications, operating in the full-throttle position is desirable.

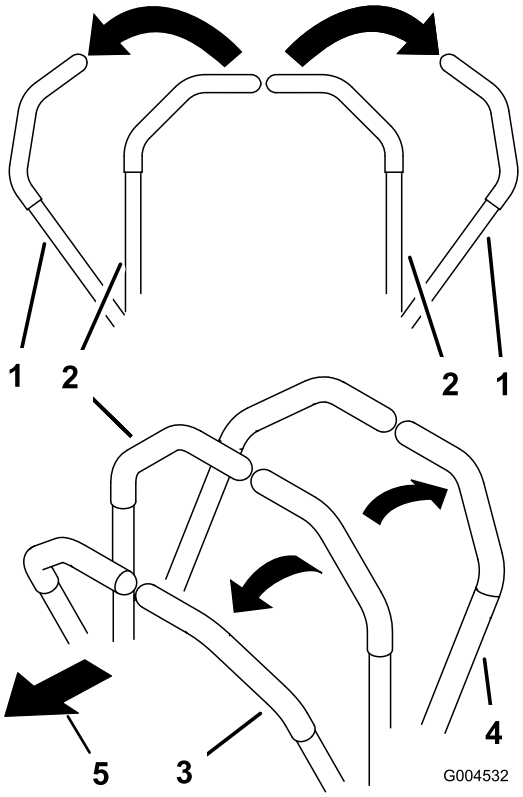

Figure 17

1. Park (brake) position
2. Center, unlock position
3. Forward
4. Backward

Using the Smart Speed™ Control System

The Smart Speed™ Control-System lever, located below the operating position (Figure 18), gives the operator a choice to drive the machine at 2 ground speed ranges—high and low.

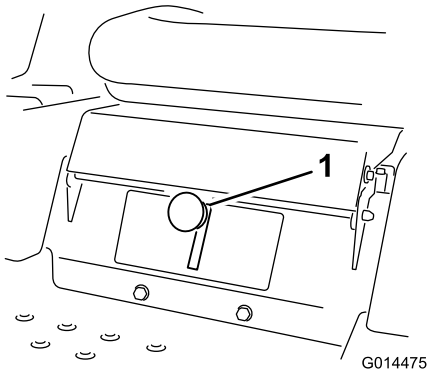

Figure 18

1. Smart-speed lever

To change speeds:

1. Move the motion control levers to neutral and outward to the park position; disengage the blade control switch.

⚠ WARNING

Removing your hands from the motion-control levers while the machine is in motion can result in a loss of control causing harm to you or bystanders.

Always stop the machine and move the motion-control levers to the park position before adjusting the Smart Speed™ Control System.

2. Adjust the lever to the desired position.

Driving Forward

1. Move the levers to the center, unlocked position.
2. To go forward, slowly push the motion-control levers forward (Figure 17).

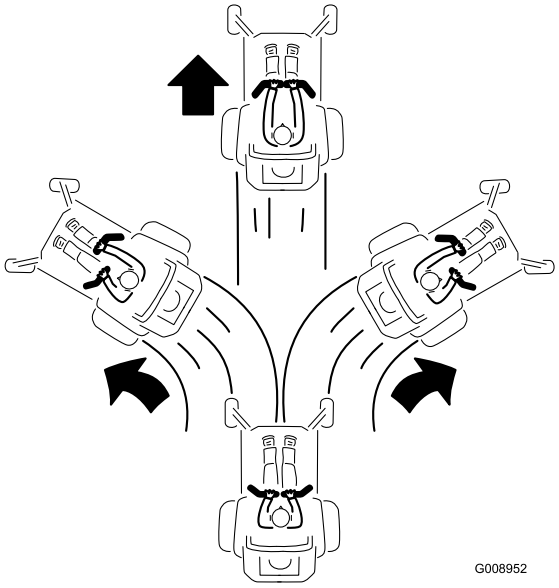

Figure 19

To go straight, apply equal pressure to both motion-control levers (Figure 17).

To turn, release pressure on the motion-control lever toward the direction you want to turn (Figure 17).

The farther you move the motion-control levers in either direction, the faster the machine will move in that direction.

To stop, pull the motion-control levers to neutral.

Driving Backward

1. Move the levers to the center, unlocked position.
2. To go backward, look behind you and down, as you slowly pull the motion-control levers rearward (Figure 20).

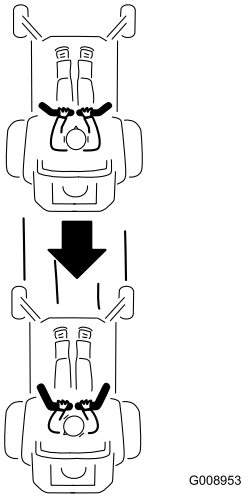

Figure 20

To go straight, apply equal pressure to both motion-control levers (Figure 20).

To turn, release the pressure on the motion-control lever toward the direction you want to turn.

To stop, push the motion-control levers to neutral.

Stopping the Machine

To stop the machine, move the motion-control levers to neutral and outward to the park position, disengage the blade-control switch, ensure the throttle is in the Fast position, and turn the ignition key to off.

Note: Remember to remove the key from the ignition switch.

⚠ WARNING

Children or bystanders may be injured if they move or attempt to operate the mower while it is unattended.

Always remove the ignition key and move the motion-control levers outward to the park position when leaving the machine unattended, even if just for a few minutes.

Adjusting the Height-of-Cut

Height-of-cut is controlled by the lever located to the right of the operating position (Figure 21).

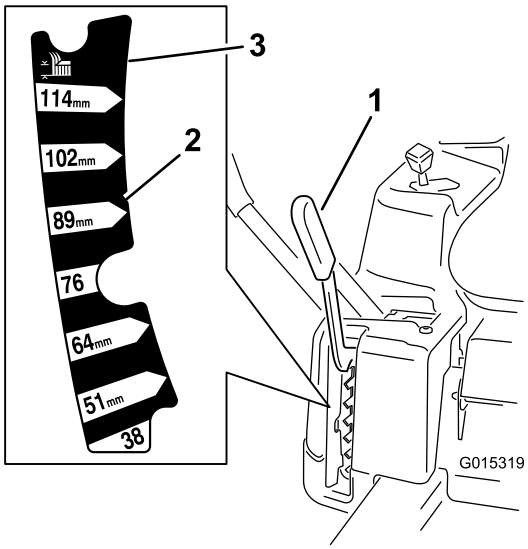

Figure 21

1. Height-of-cut lever
2. Height-of-cut positions
3. 115 mm (4.5 inches)—transport position

1. Pull up and inward on the lever to move it to the desired cutting position.
2. Once at the desired cutting position, slowly lower the lever until it engages the position.

Note: The transport position is the highest height-of-cut position or cutting height (115 mm (4.5 inches)) as shown in Figure 21.

Positioning the Seat

The seat can move forward and backward. Position the seat where you have the best control of the machine and are most comfortable.

1. Raise the seat and loosen the adjustment bolts just enough that seat can move (Figure 22).

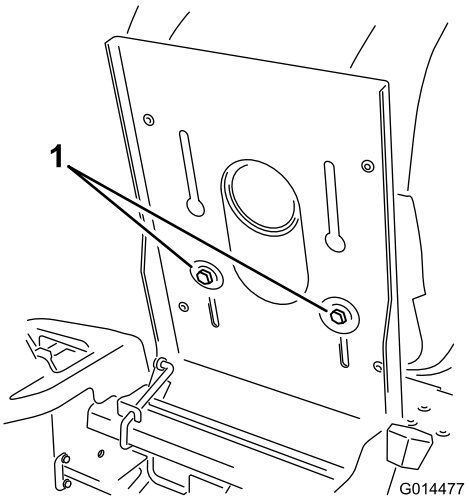

Figure 22

1. Adjustment bolt

2. Move the seat to the desired position and tighten the bolts.

Adjusting the Motion-control Levers

Adjusting the Height

The motion-control levers can be adjusted higher or lower for maximum operator comfort.

1. Remove the 2 bolts holding the control lever to the control-arm shaft (Figure 23).
2. Move the control lever to the next set of holes.
3. Secure the lever with the 2 bolts (Figure 23).

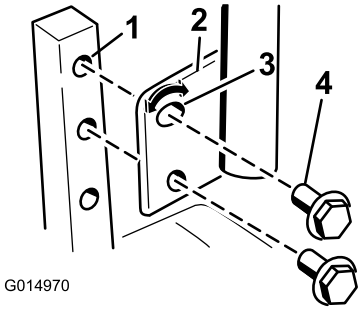

Figure 23

1. Control-arm shaft
2. Control lever
3. Slotted, upper hole
4. Bolt

4. Repeat the adjustment for the opposite control lever.

Adjusting the Tilt

The motion-control levers can be tilted fore or aft for maximum operator comfort.

1. Loosen the upper bolt holding the control lever to the control-arm shaft.
2. Loosen the lower bolt just enough to pivot the control lever fore or aft (Figure 23). Tighten both bolts to secure the control in the new position.
3. Repeat the adjustment for the opposite control lever.

Pushing the Machine by Hand

Important: Always push the machine by hand. Do not tow the machine, because damage may occur.

This machine has an electric-brake mechanism, and to push the machine, the ignition key needs to be in the Run position. The battery needs to be charged and functioning for the electric brake to be disengage.

Pushing the Machine

1. Park the machine on a level surface, and disengage the blade-control switch.
2. Move the motion-control levers outward to the park position, stop the engine, and wait for all moving parts to stop before leaving the operating position.
3. Locate the bypass levers on the frame on both sides of the engine.
4. Move the bypass levers forward through the key hole and down to lock them in place (Figure 24).

   Note: Ensure this is done for each lever.
5. Move the motion-control levers inward to the neutral position and turn the ignition key to the Run position.

   Note: Do not start the machine.

   Note: The machine is now able to be pushed by hand.

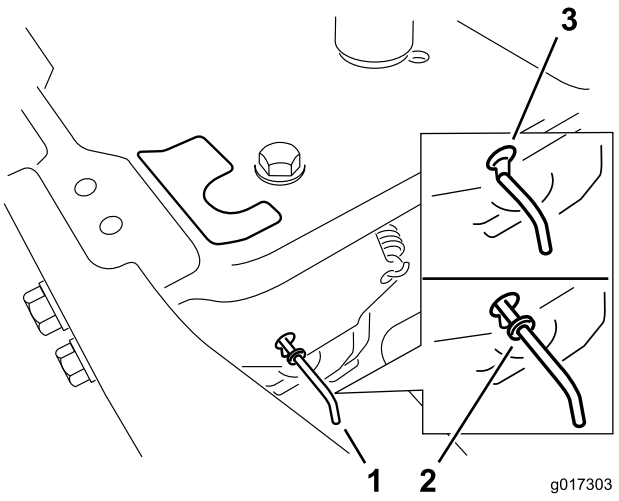

Figure 24

1. Bypass-lever locations
2. Lever position for operating the machine
3. Lever position for pushing the machine

6. When finished, ensure that the key has been returned to the Stop position to avoid draining the battery charge.

Note: If the machine fails to move, the electric brake may still be engaged. If necessary, the electric brake can be released manually; refer to Releasing the Electric Brake (page 35).

Operating the Machine

Move the bypass levers rearward through the key hole and down to lock them in place as shown in Figure 24.

Note: Ensure this is done for each lever.

Converting to Side Discharge

The mower deck and mower blades shipped with this machine were designed for optimum mulching and side discharge performance.

Removing the Discharge Cover for the Side Discharge

1. Park the machine on a level surface and disengage the blade-control switch.
2. Move the motion-control levers outward to park position, stop the engine, remove the key, and wait for all moving parts to stop before leaving the operating position.
3. Remove the 2 bolts and nuts that secure the discharge cover to the mower (Figure 25).

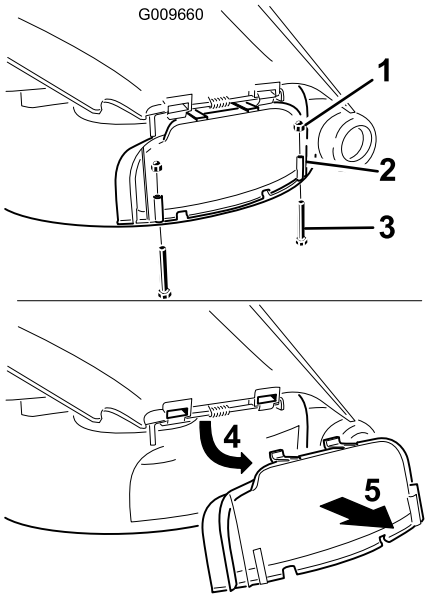

Figure 25

1. Cap nut (1/4 inch)
2. Discharge cover
3. Bolt (1/4 x 2-1/2 inches)
4. Rotate the cover up
5. Remove the cover

4. Remove the discharge cover.
5. Lift up the grass deflector, and locate the lock nut on the deflector pivot rod.
6. Remove the existing thin nut (3/8 inch).
7. Install the cutoff baffle to the exposed pivot rod (Figure 26).

   Note: Use the existing thin nut (3/8 inch) to secure the baffle to the mower.

   Note: The cutoff baffle was shipped with the machine as a loose part.

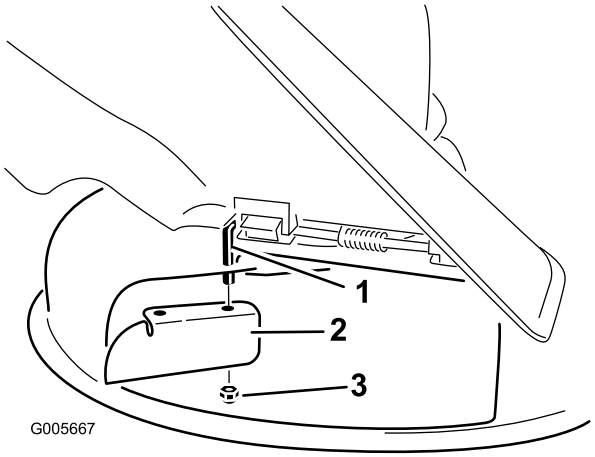

Figure 26

1. Pivot rod
2. Cutoff baffle (originally shipped with the machine)
3. Existing thin nut (3/8 inch)

8. Torque the fastener to 7 to 9 N-m (14 to 18 ft-lb).
9. Lower the grass deflector over the discharge opening

   Important: Ensure that the mower has a hinged grass deflector that disperses clippings to the side and down toward the turf, while in side-discharge mode.

Installing the Discharge Cover for Mulching

1. Park the machine on a level surface and disengage the blade-control switch.
2. Move the motion-control levers outward to the park position, stop the engine, remove the key, and wait for all the moving parts to stop before leaving the operating position.
3. Remove the cutoff baffle from the mower deck (Figure 26).
4. Lift the grass deflector and slide the tabs on top of the discharge cover under the grass deflector retaining rod.
5. Rotate the discharge cover down over the opening, and onto the lower lip of the mower (Figure 27).

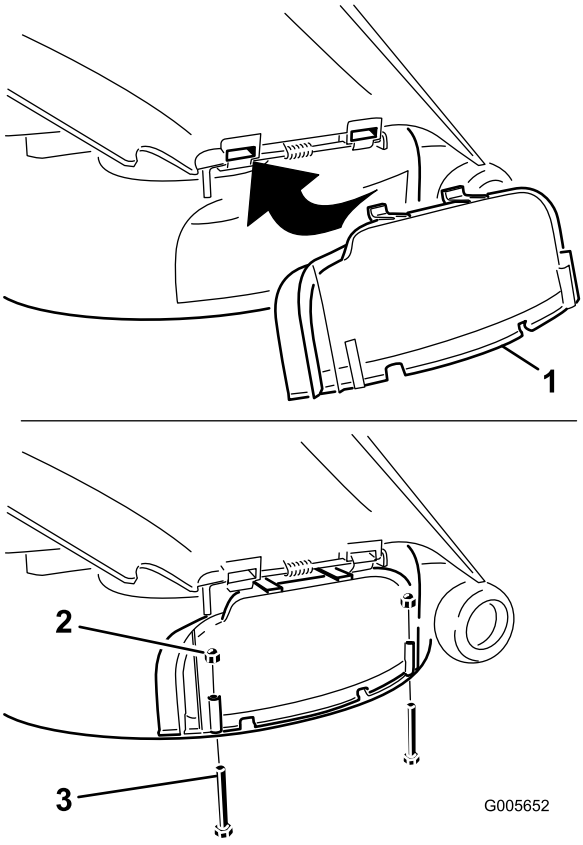

Figure 27

1. Discharge cover
2. Cap nut (1/4 inch)
3. Bolt (1/4 x 2-1/2 inches)

6. Secure the discharge cover to the lower lip of the mower with 2 bolts (1/4 x 2-1/2 inches) and 2 cap nuts (1/4 inch) as shown in Figure 27.

Note: Do not overtighten the nuts; this could distort the cover and cause blade contact.

Operating Tips

Using the Fast Throttle Setting

For best mowing and maximum air circulation, operate the engine at the Fast throttle position. Air is required to thoroughly cut grass clippings, so do not set the height-of-cut so low as to totally surround the mower by uncut grass. Always try to have one side of the mower free from uncut grass, which allows air to be drawn into the mower.

Using the Smart Speed™ Control System

The Smart Speed™ Control-System lever, located below the operating position, gives the operator a choice to drive the machine at 2 speed ranges—high and low. An operator can benefit from the lower speed setting when maneuvering the machine in tight spaces or operating around delicate landscapes. The low setting can also be used to operate the machine at a high throttle setting and blade speed, while still being able to reduce the ground speed to increase the quality of cut.

Cutting a Lawn for the First Time

Cut grass slightly longer than normal to ensure that the cutting height of the mower does not scalp any uneven ground. However, the cutting height used in the past is generally the best one to use. When cutting grass longer than six inches tall, you may want to cut the lawn twice to ensure an acceptable quality of cut.

Cutting 1/3 of the Grass Blade

It is best to cut only about 1/3 of the grass blade. Cutting more than that is not recommended unless grass is sparse, or it is late fall when grass grows more slowly.

Mowing Direction

Alternate the mowing direction to keep the grass standing straight. This also helps disperse clippings which enhances decomposition and fertilization.

Mowing at Correct Intervals

Normally, mow every 4 days. But, remember, grass grows at different rates at different times. So to maintain the same cutting height, which is a good practice, and mow more often in early spring. As the grass growth rate slows in mid summer, mow less frequently. If you cannot mow for an extended period, first mow at a high cutting height, then mow again 2 days later at a lower height setting.

Avoiding Cutting Too Low

If the cutting width of the mower is wider than the mower you previously used, raise the cutting height to ensure that uneven turf is not cut too short.

Cutting Long Grass

If the grass is ever allowed to grow slightly longer than normal, or if it contains a high degree of moisture, raise the cutting height higher than usual and cut the grass at this setting. Then cut the grass again using the lower, normal setting.

Stopping

If the machine's forward motion must be stopped while mowing, a clump of grass clippings may drop onto your lawn. To avoid this, move onto a previously cut area with the blades engaged or you can disengage the mower deck while moving forward.

Keeping the Underside of the Mower Clean

Clean clippings and dirt from the underside of the mower after each use. If grass and dirt build up inside the mower, cutting quality will eventually become unsatisfactory.

Maintaining the Blade(s)

Maintain a sharp blade throughout the cutting season because a sharp blade cuts cleanly without tearing or shredding the grass blades. Tearing and shredding turns grass brown at the edges, which slows growth and increases the chance of disease. Check the mower blades after each use for sharpness, and for any wear or damage. File down any nicks and sharpen the blades as necessary. If a blade is damaged or worn, replace it immediately with a genuine Toro replacement blade.

Maintenance

Note: Determine the left and right sides of the machine from the normal operating position.

Recommended Maintenance Schedule(s)

Maintenance Service Interval	Maintenance Procedure
Before each use or daily	• Check the safety-interlock system. • Check the air cleaner for dirty, loose or damaged parts. • Check the engine-oil level. • Clean the air-intake screen. • Check the cutting blades. • Inspect the grass deflector for damage
After each use	• Clean the mower-deck housing.
Every 25 hours	• Grease all the lubrication points. • Service the paper element (more often under extremely dusty, dirty conditions). • Check tire pressure. • Check the belts for wear or cracks.
Every 100 hours	• Replace the paper element (more often under extremely dusty, dirty conditions). • Change the engine oil and the engine-oil filter. • Clean the blower housing (more often under extremely dusty, dirty conditions). • Replace the in-line fuel filter.
Every 200 hours	• Check spark plug condition and gap.
Every 500 hours	• Replace the spark plug.
Before storage	• Charge the battery and disconnect battery cables. • Perform all maintenance procedures listed above before storage. • Paint any chipped surfaces.

Important: **Refer to your engine operator's manual for additional maintenance procedures.**

⚠ CAUTION

If you leave the key in the ignition switch, someone could accidently start the engine and seriously injure you or other bystanders.

Remove the key from the ignition and disconnect the wire from the spark plug before you do any maintenance. Set the wire aside so that it does not accidentally contact the spark plug.

Premaintenance Procedures

Raising the Seat

Make sure that the motion-control levers are locked in the park position, and lift the seat forward.

The following components can be accessed by raising the seat:

- Serial plate
- Service decal
- Seat-adjustment bolts
- Fuel filter
- Battery and battery cables

Lubrication

Greasing the Bearings

Service Interval: Every 25 hours—Grease all the lubrication points.

Grease Type: No. 2 General Purpose, Lithium-Base Grease

1. Park the machine on a level surface, and disengage the blade-control switch.
2. Move the motion-control levers outward to the park position, stop the engine, remove the key, and wait for all moving parts to stop before leaving the operating position.
3. Clean the grease fittings (Figure 28 and Figure 29) with a rag.

   Note: Make sure to scrape any paint off of the front of the fitting(s).

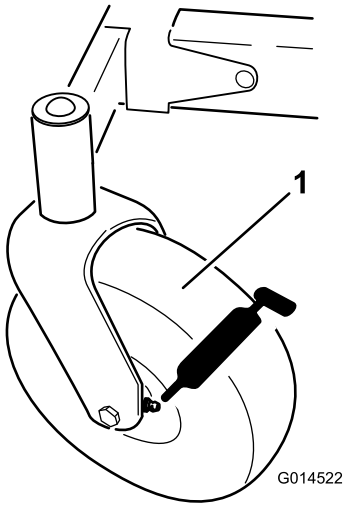

Figure 28

1. Front caster tire

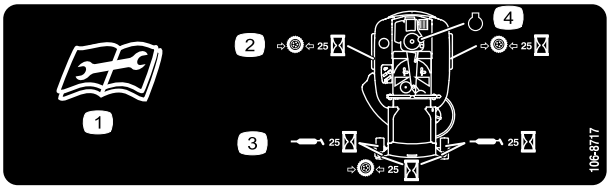

Figure 29

Located on the seat-pan underside

1. Read the instructions before servicing or performing maintenance
2. Check the tire pressure every 25 operating hours
3. Grease every 25 operating hours
4. Engine

4. Connect a grease gun to each fitting (Figure 28 and Figure 29).
5. Pump grease into the fittings until grease begins to ooze out of the bearings.

Engine Maintenance

Servicing the Air Cleaner

Service Interval: Before each use or daily—Check the air cleaner for dirty, loose or damaged parts.

This engine is equipped with a replaceable, high density paper-air-cleaner element. Check the air cleaner daily or before starting the engine. Check for a buildup of dirt and debris around the air cleaner system. Keep this area clean. Also, check for loose or damaged components. Replace all bent or damaged air-cleaner components.

Note: Operating the engine with loose or damaged air-cleaner components could allow unfiltered air into the engine causing premature wear and failure.

Note: Service the air cleaner more often under extremely dusty, dirty conditions.

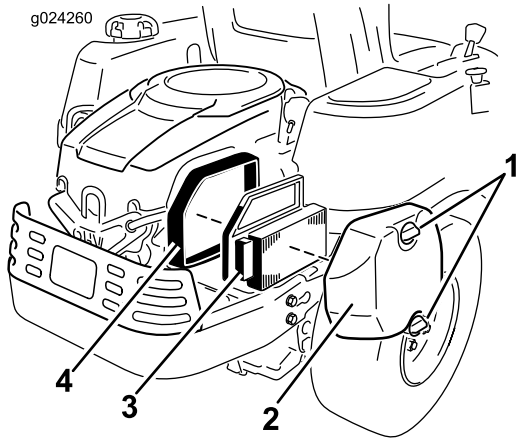

Figure 30

1. Knobs, air-cleaner cover
2. Air-cleaner cover
3. Paper element
4. Air-cleaner base

Servicing Paper Element

Service Interval: Every 25 hours—Service the paper element (more often under extremely dusty, dirty conditions).

Every 100 hours—Replace the paper element (more often under extremely dusty, dirty conditions).

1. Remove the air-cleaner cover (Figure 30).
2. Remove the air-cleaner element with the integral rubber seal (Figure 30).
3. Gently tap the pleated side of the paper element to dislodge dirt.

   Note: Do not wash the paper element or use pressurized air, as this will damage the element. Replace a dirty, bent, or damaged element. Handle new elements carefully; do not use if the rubber seal is damaged.
4. Clean all air-cleaner components of any accumulated dirt or foreign material.

   Note: Prevent any dirt from entering the carburetor.
5. Install the air-cleaner element with the pleated side out and seat the rubber seal onto the edges of the air-cleaner base (Figure 30).
6. Install the air-cleaner cover and secure with the 2 knobs (Figure 30).

Servicing the Engine Oil

Oil Type: Detergent oil (API service SG, SH, SJ, or higher)

Crankcase Capacity: 1.5 L (51 oz) when the filter is changed

Viscosity: See the table below.

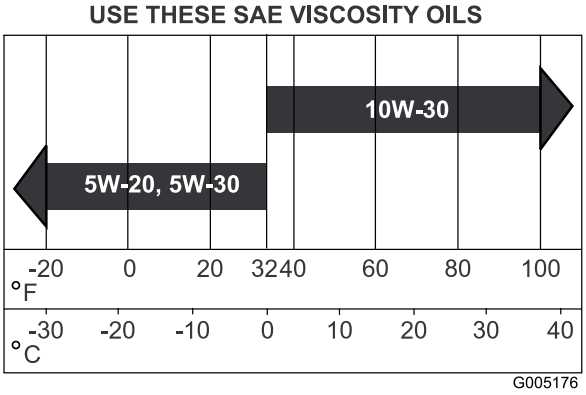

Figure 31

Checking the Engine-oil Level

Service Interval: Before each use or daily—Check the engine-oil level.

1. Park the machine on a level surface, disengage the blade-control switch, stop the engine, and remove the key.
2. Make sure the engine is stopped, level, and is cool so the oil has had time to drain into the sump.
3. To keep dirt, grass clippings, etc., out of the engine, clean the area around the oil-fill cap and dipstick before removing it.
4. Pull and remove the oil-fill cap and dipstick, and wipe the oil off.
5. Insert the dipstick and push firmly into place (Figure 32).

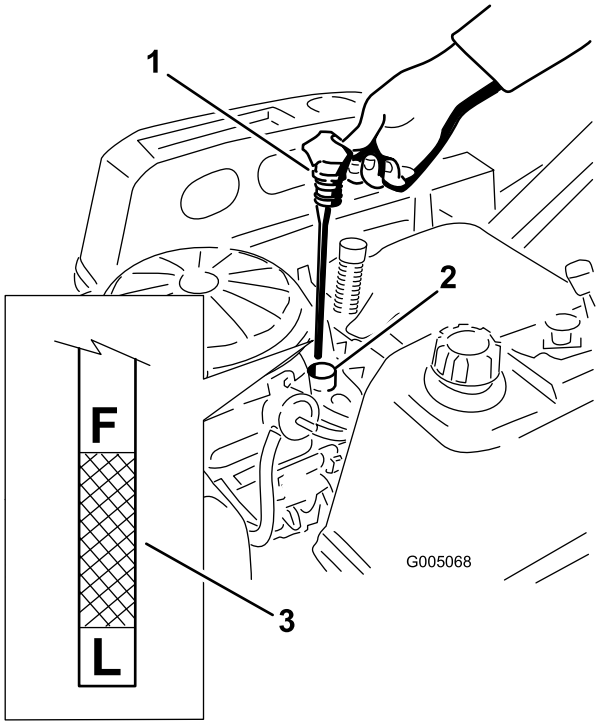

Figure 32

1. Oil dipstick
2. Filler tube
3. Engine-oil level

6. Remove the dipstick and check the oil level (Figure 32).

   Note: The oil level should be up to, but not over, the **F** mark on the dipstick.

7. If the level is low, add oil of the proper type, up to the **F** mark on the dipstick.

   Note: Always check the level with the dipstick before adding more oil.

   Note: To prevent extensive engine wear or damage, always maintain the proper oil level in the crankcase. Never operate the engine with the oil level below the "L" mark or over the "F" mark on the dipstick.

Changing the Engine Oil and the Engine-oil Filter

Service Interval: Every 100 hours—Change the engine oil and the engine-oil filter.

Fill with service class SG, SH, SJ or higher oil as specified in the "Viscosity Grades" table.

Change the engine oil and the engine-oil filter while the engine is still warm. The oil will flow more freely and carry away more impurities. Make sure the engine is level when filling, checking, or changing the oil.

Change the oil and oil filter as follows:

1. Park the machine, so that the drain side is slightly lower than the opposite side, to assure the oil drains completely.
2. Disengage the blade-control switch and move the motion controls outward to the park position.
3. Stop the engine, remove the key, and wait for all moving parts to stop before leaving the operating position.
4. Clean the area around the drain valve and on the machine frame.
5. Locate the oil-drain hose, and slide it over the drain valve (Figure 33).

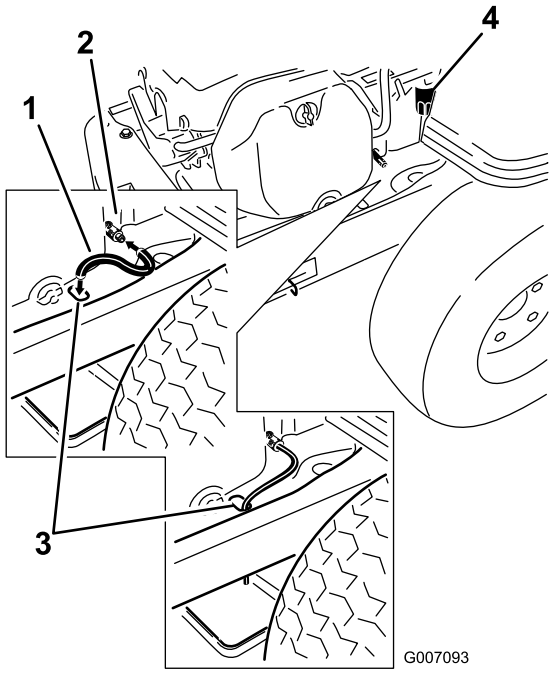

Figure 33

1. Oil-drain hose
2. Drain valve
3. End of the frame
4. Engine-oil filter

6. Place the opposite end of the oil-drain hose over the end of the frame (Figure 33).
7. Place a pan underneath the machine directly below the drain hose (Figure 34).

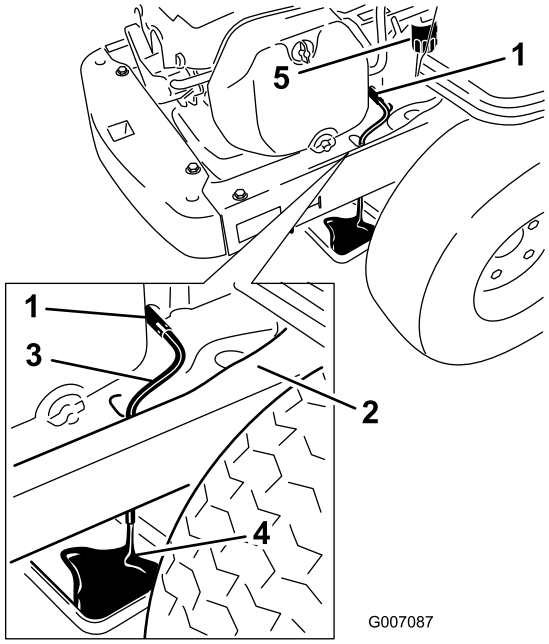

Figure 34

1. Oil-drain valve
2. Machine frame
3. Oil-drain hose
4. Pan
5. Oil filter

8. Turn the drain valve 1/4 counterclockwise to open and allow the oil to drain (Figure 34).
9. Remove the oil-fill cap and dipstick (Figure 32).
10. Be sure to allow ample time for complete drainage.
11. Remove the old filter and wipe off the mounting pad (Figure 34).
12. When oil has drained completely, close the oil-drain valve.
13. Remove the oil-drain hose and wipe up any excess oil on the frame (Figure 34).

    Note: Dispose of the used oil at a recycling center.
14. Place the new replacement filter in a shallow pan with the open end up.
15. Pour new oil of the proper type, in through the threaded center hole.

    Note: Stop pouring when the oil reaches the bottom of the threads. Allow a minute or two for the oil to be absorbed by the filter material.
16. Apply a thin film of clean oil to the rubber gasket on the new filter.
17. Install the replacement oil filter to the mounting pad.
18. Turn the oil filter clockwise until the rubber gasket contacts the pad, then tighten the filter an additional 2/3 to 1 turn (Figure 35).

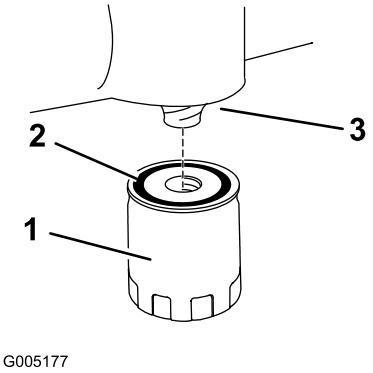

Figure 35

1. Oil filter
2. Gasket
3. Adapter

19. Slowly pour approximately 80% of the specified oil into the filler tube (Figure 32).
20. Install the oil-fill cap and dipstick, and push it firmly into place (Figure 32).
21. Check the oil level (Figure 32); refer to Checking the Engine-oil Level (page 28).
22. Slowly add additional oil to bring it to the Full mark.
23. Install the oil-fill cap and dipstick, and push it firmly into place (Figure 32).

Servicing the Spark Plug

Service Interval: Every 200 hours—Check spark plug condition and gap.

Every 500 hours—Replace the spark plug.

The spark plug is RFI compliant. Equivalent alternate brand plugs can also be used. Spark plug replacement is recommended at 500 hours.

Type: **Champion XC12YC (or equivalent)**

Air Gap: 0.76 mm (0.03 inch)

Removing the Spark Plug

1. Disengage the blade-control switch, move the motion controls outward to the park position, stop the engine, and remove the key.
2. Pull the wire off the spark plug (Figure 36).
3. Clean around the spark plug to prevent dirt from falling into the engine and potentially causing damage.

   Note: Due to the deep recess around the spark plug, blowing out the cavity with compressed air is usually the most effective method for cleaning. The spark plug is most accessible when the blower housing is removed for cleaning.
4. Remove the spark plug and metal washer.

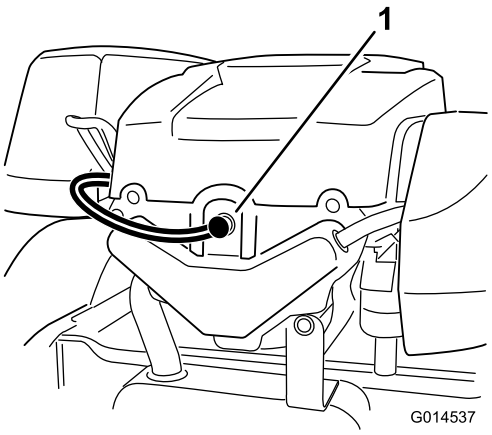

Figure 36

1. Spark plug and wire location

Checking the Spark Plug

Important: Do not clean the spark plug(s). Always replace the spark plug(s) when it has: a black coating, worn electrodes, an oily film, or cracks.

If you see light brown or gray on the insulator, the engine is operating properly. A black coating on the insulator usually means the air cleaner is dirty.

Set the gap to 0.76 mm (0.030 inch).

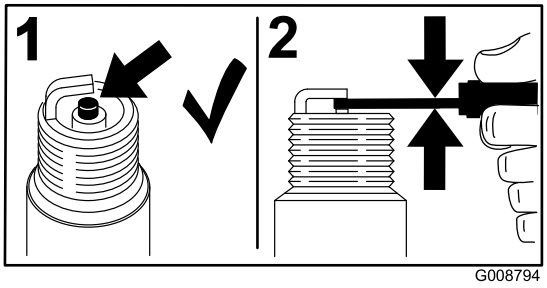

Figure 37

Installing the Spark Plug

Tighten the spark plug(s) to 22 N-m (16 ft-lb).

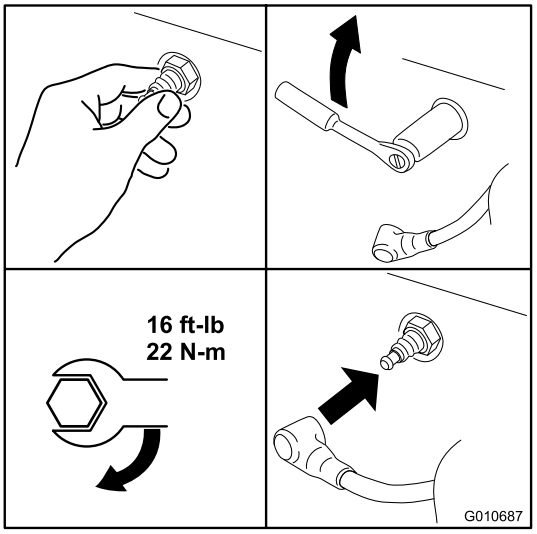

Figure 38

Cleaning the Cooling System

Clean the air-intake screen from grass and debris before each use.

1. Disengage the blade-control switch, move the control levers to the neutral-locked position, and apply the parking brake.
2. Stop the engine, remove the key, and wait for all moving parts to stop before leaving the operating position.
3. Remove the air-intake screen, the air-cleaner cover, and the fan housing.
4. Clean debris and grass from the parts.
5. Install the air-intake screen, air-cleaner cover, and the fan housing.

Cleaning the Blower Housing

To ensure proper cooling, make sure the grass screen, cooling fins, and other external surfaces of the engine are kept clean at all times.

Annually, or every 100 hours of operation (more often under extremely dusty, dirty conditions), remove the blower housing, and any other cooling shrouds. Clean the cooling fins and external surfaces as necessary. Make sure the cooling shrouds are installed. Torque the blower housing screws to 7.5 N-m (5.5 ft-lb).

Important: Operating the engine with a blocked grass screen, dirty or plugged cooling fins, and/or cooling shrouds removed, will cause engine damage due to overheating.

Fuel System Maintenance

⚠ DANGER

In certain conditions, gasoline is extremely flammable and highly explosive. A fire or explosion from gasoline can burn you, others, and can damage property.

- **Perform any fuel-related maintenance when the engine is cold. Do this outdoors in an open area. Wipe up any gasoline that spills.**
- **Never smoke when draining gasoline, and stay away from an open flame or where a spark may ignite the gasoline fumes.**

Replacing the In-line Fuel Filter

Service Interval: Every 100 hours—Replace the in-line fuel filter.

Never install a dirty filter if it is removed from the fuel line.

1. Park the machine on a level surface and disengage the blade-control switch.
2. Move the motion-control levers outward to the park position, stop the engine, remove the key, and wait for all moving parts to stop before leaving the operating position.
3. Locate the fuel filter on the side of the engine (Figure 39).

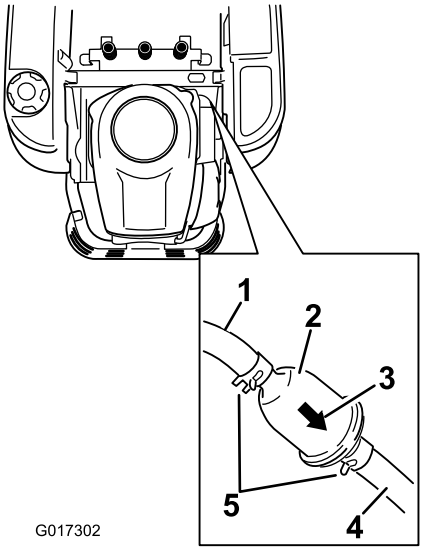

Figure 39

1. Fuel line from tank
2. In-line fuel filter
3. Flow direction arrow
4. Fuel line to engine
5. Hose clamp

4. Squeeze the ends of the hose clamps together and slide them away from the filter (Figure 39).
5. Remove the filter from the fuel lines.
6. Install a new filter with the flow-direction arrow coming from the fuel tank and pointing to the engine.
7. Move the hose clamps close to the filter (Figure 39) to secure it in place.

Electrical System Maintenance

WARNING

CALIFORNIA
Proposition 65 Warning

Battery posts, terminals, and related accessories contain lead and lead compounds, chemicals known to the State of California to cause cancer and reproductive harm. Wash hands after handling.

Charging the Battery

Removing the Battery

⚠ WARNING

Battery terminals or metal tools could short against metal machine components causing sparks. Sparks can cause the battery gasses to explode, resulting in personal injury.

- **When removing or installing the battery, do not allow the battery terminals to touch any metal parts of the machine.**
- **Do not allow metal tools to short between the battery terminals and metal parts of the machine.**

1. Park the machine on a level surface and disengage the blade-control switch.
2. Move the motion-control levers outward to the park position, stop the engine, remove the key, and wait for all moving parts to stop before leaving the operating position.
3. Raise the seat to access the battery.
4. Disconnect the negative (black) ground cable from the battery post (Figure 40).

   Note: Retain all fasteners.

⚠ WARNING

Incorrect battery-cable routing could damage the machine and cables causing sparks. Sparks can cause the battery gasses to explode, resulting in personal injury.

- **Always disconnect the negative (black) battery cable before disconnecting the positive (red) cable.**
- **Always connect the positive (red) battery cable before connecting the negative (black) cable.**

5. Slide the rubber cover up the positive (red) cable.
6. Disconnect the positive (red) cable from the battery post (Figure 40).

   Note: Retain all fasteners.

7. Remove the battery hold-down (Figure 40), and lift the battery from the battery tray.

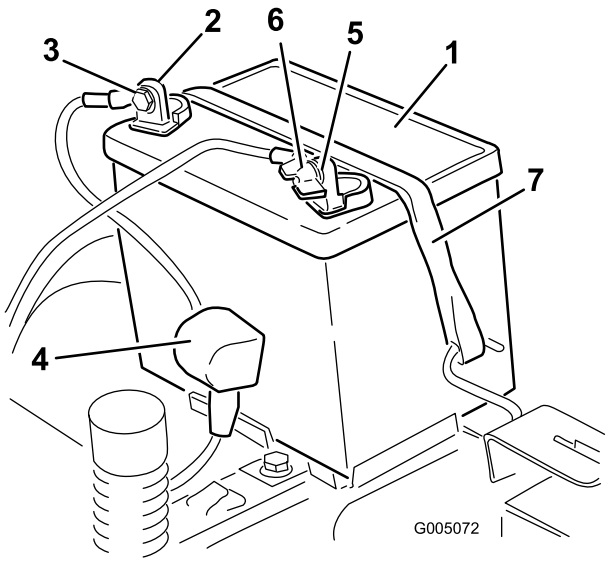

Figure 40

1. Battery
2. Positive (+) battery post
3. Bolt, washer, and nut
4. Terminal boot
5. Negative (–) battery post
6. Wing nut, washer, and bolt
7. Battery hold-down

Charging the Battery

Service Interval: Before storage—Charge the battery and disconnect battery cables.

1. Remove the battery from the chassis; refer to Removing the Battery (page 33).
2. Charge the battery for a minimum of 1 hour at 6 to 10 amps.

   Note: Do not overcharge the battery.
3. When the battery is fully charged, unplug the charger from the electrical outlet, then disconnect the charger leads from the battery posts (Figure 41).

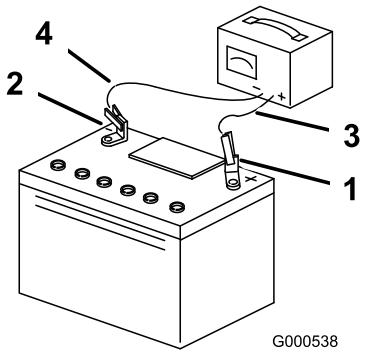

Figure 41

1. Positive (+) battery post
2. Negative (–) battery post
3. Red (+) charger lead
4. Black (–) charger lead

Note: Do not run the machine with the battery disconnected, electrical damage may occur.

Installing the Battery

1. Position the battery in the tray (Figure 40).
2. Using the fasteners previously removed, install the positive (red) battery cable to the positive (+) battery terminal.
3. Using the fasteners previously removed, install the negative battery cable to the negative (-) battery terminal.
4. Slide the red terminal boot onto the positive (red) battery post.
5. Secure the battery with the hold-down (Figure 40).
6. Lower the seat.

Servicing the Fuses

The electrical system is protected by fuses. It requires no maintenance; however, if a fuse blows, check the component/circuit for a malfunction or short.

Fuse type:

- Main—F1-30 amp, blade-type
- Charge Circuit—F2-25 amp, blade-type

1. Remove the screws securing the control panel to the machine.

   Note: Retain all fasteners.
2. Lift the control pane up to access the main wiring harness and fuse block (Figure 42).
3. To replace a fuse, pull out on the fuse to remove it (Figure 42).

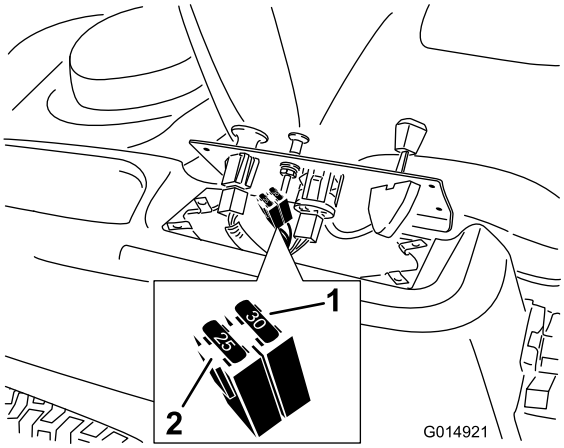

Figure 42

1. Main—30 amp
2. Charge circuit—25 amp

4. Return the control panel to its original position.

   Note: Use the screws removed previously to secure the panel to the machine.

Drive System Maintenance

Checking the Tire Pressure

Service Interval: Every 25 hours—Check tire pressure.

Maintain the air pressure in the front and rear tires as specified. Uneven tire pressure can cause uneven cut. Check the pressure at the valve stem (Figure 43). Check the tires when they are cold to get the most accurate pressure reading.

Refer to the maximum pressure suggested by the tire manufacturer on the sidewall of the caster wheel tires.

Inflate the rear drive-wheel tires to 82 kPa (12 psi).

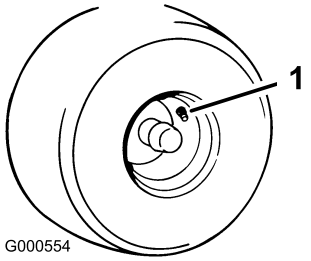

Figure 43

1. Valve stem

Releasing the Electric Brake

The electric brake releases by manually rotating the link arms forward. Once the electric brake is energized the brake will reset.

To release the brake:

1. Locate the shaft on the electric brake where the brake-link arms are connected (Figure 44).
2. Rotate the shaft forward to release the brake.

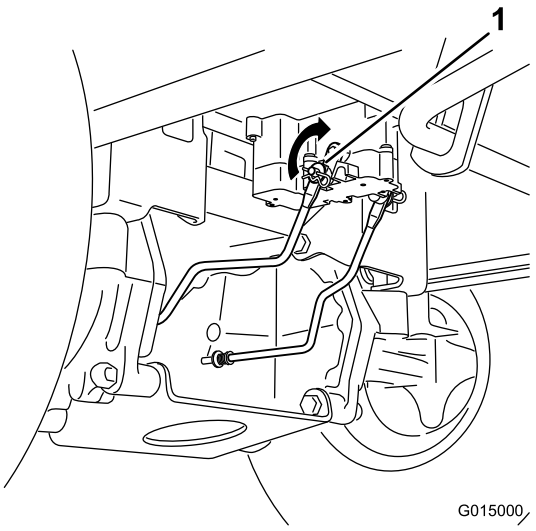

Figure 44

1. Brake-link arm on the electric-brake-control module

Mower Maintenance

Servicing the Cutting Blades

Maintain sharp blades throughout the cutting season, because sharp blades cut cleanly without tearing or shredding the grass blades. Tearing and shredding turns grass brown at the edges, which slows growth, and increases the chance of disease.

Check the cutter blades daily for sharpness, and for any wear or damage. File down any nicks and sharpen the blades as necessary. If a blade is damaged or worn, replace it immediately with a genuine Toro replacement blade. For convenient sharpening and replacement, you may want to keep extra blades on hand.

⚠ WARNING

A worn or damaged blade can break, and a piece of the blade could be thrown into the operator's or bystander's area, resulting in serious personal injury or death.

- **Inspect the blade periodically for wear or damage.**
- **Replace a worn or damaged blade.**

Before Inspecting or Servicing the Blades

Park the machine on a level surface, disengage the blade-control switch, move the motion-control levers outward to the park position, stop the engine, and remove the key.

Inspecting the Blades

Service Interval: Before each use or daily—Check the cutting blades.

1. Inspect the cutting edges (Figure 45).

   Note: If the edges are not sharp or have nicks, remove and sharpen the blades; refer to Sharpening the Blades (page 38).

2. Inspect the blades, especially the curved area (Figure 45).

   Note: If you notice any damage, wear, or a slot forming in this area (item 3 in Figure 45), immediately install a new blade.

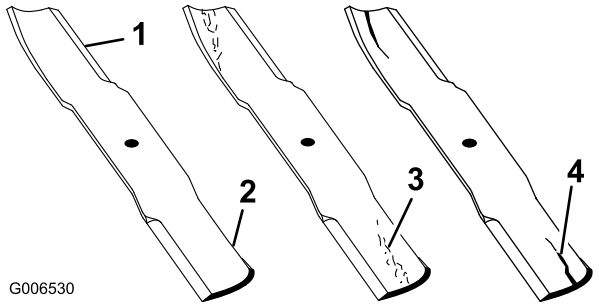

Figure 45

1. Cutting edge
2. Curved area
3. Wear/slot forming
4. Damage

Checking for Bent Blades

Note: The machine must be on a level surface for the following procedure.

1. Raise the mower deck to the highest height-of-cut position; also considered the 'transport' position.
2. While wearing thickly padded gloves, or other adequate hand protection, slowly rotate the blade to be measure into a position that allows effective measurement of the distance between the cutting edge and the level surface the machine is on (Figure 46).

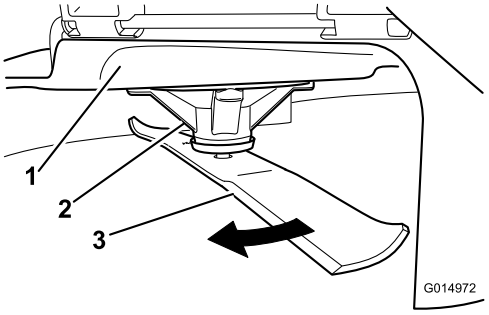

Figure 46

1. Deck
2. Spindle housing
3. Blade

3. Measure from the tip of the blade to the flat surface (Figure 47).

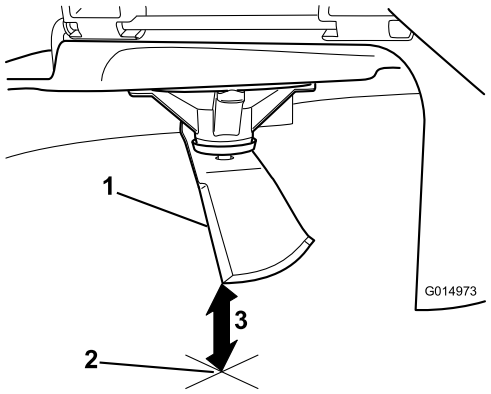

Figure 47

1. Blade (in position for measuring)
2. Level surface
3. Measured distance between blade and the surface (A)

4. Rotate the same blade 180 degrees, so that the opposing cutting edge is now in the same position (Figure 48).

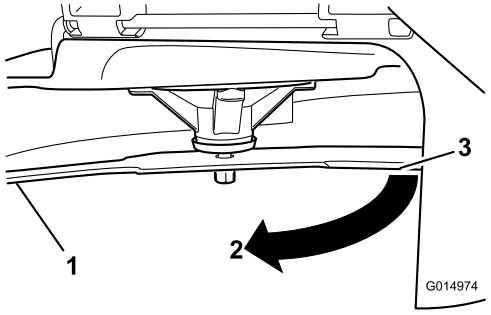

Figure 48

1. Blade (side previously measured)
2. Measurement (position used previously)
3. Opposing side of blade being moved into measurement position

5. Measure from the tip of the blade to the flat surface (Figure 49).

   Note: The variance should be no more than 3mm (1/8 inch).

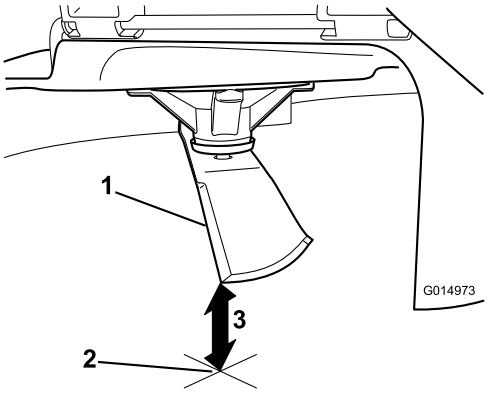

Figure 49

1. Opposite blade edge (in position for measuring)
2. Level surface
3. Second measured distance between blade and surface (B)

   A. If the difference between A and B is greater than 3mm (1/8 inch), replace the blade with a new blade; refer to Removing the Blades (page 37) and Installing the Blades (page 38).

      Note: If a bent blade is replaced with a new one, and the dimension obtained continues to exceed 3mm (1/8 inch), the blade spindle could be bent. Contact an Authorized Toro Dealer for service.

   B. If the variance is within constraints, move to the next blade.

Repeat this procedure on each blade.

Removing the Blades

The blades must be replaced if a solid object is hit, if the blade is out of balance, or if the blade is bent. To ensure optimum performance and continued safety conformance of the machine, use genuine Toro replacement blades. Replacement blades made by other manufacturers may result in non-conformance with safety standards.

1. Hold the blade end using a rag or thickly-padded glove.
2. Remove the blade bolt, the curved washer, the blade stiffener, and the blade from the spindle shaft (Figure 50).

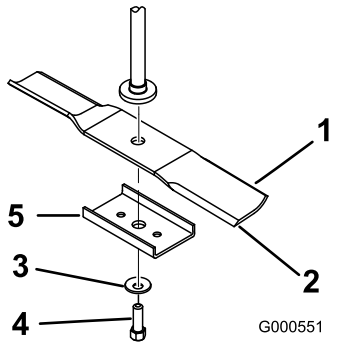

Figure 50

1. Sail area of the blade
2. Blade
3. Curved washer
4. Blade bolt
5. Blade stiffener (42-inch decks only)

Sharpening the Blades

1. Use a file to sharpen the cutting edge at both ends of the blade (Figure 51).

   Note: Maintain the original angle.

   Note: The blade retains its balance if the same amount of material is removed from both cutting edges.

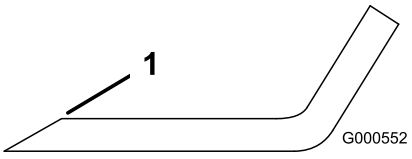

Figure 51

1. Sharpen at original angle

2. Check the balance of the blade by putting it on a blade balancer (Figure 52).

   Note: If the blade stays in a horizontal position, the blade is balanced, and can be used.

   Note: If the blade is not balanced, file some metal off the end of the sail area only (Figure 51).

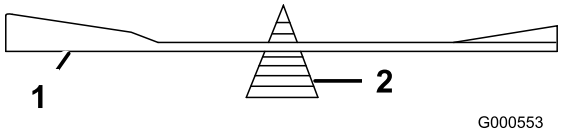

Figure 52

1. Blade
2. Balancer

3. Repeat this procedure until the blade is balanced.

Installing the Blades

1. Install the blade onto the spindle shaft (Figure 50).

   Important: The curved part of the blade must be pointing upward toward the inside of the mower to ensure proper cutting.

2. Install the blade stiffener, the curved washer (cupped side toward the blade), and the blade bolt (Figure 50).
3. Torque the blade bolt to 47 to 88 N-m (35 to 65 ft-lb).

Leveling the Mower Deck

Check to ensure that the mower deck is level any time you install the mower or when you see an uneven cut on your lawn.

The mower deck must be checked for bent blades prior to leveling; any bent blades must be removed and replaced; refer to the Checking for Bent Blades (page 36) before continuing.

The mower deck must be leveled side-to-side first then the front to rear slope can be adjusted.

Requirements:

- The machine must be on a level surface.
- All 4 tires must be properly inflated; refer to Checking the Tire Pressure (page 35).

Side-to-Side Leveling

1. Park the machine on a level surface and disengage the blade-control switch.
2. Move the motion-control levers outward to the park position, stop the engine, remove the key, and wait for all moving parts to stop before leaving the operating position.
3. Set the height-of-cut lever to middle position.
4. Carefully rotate the blades so that they are all side to side (Figure 53 and Figure 54).

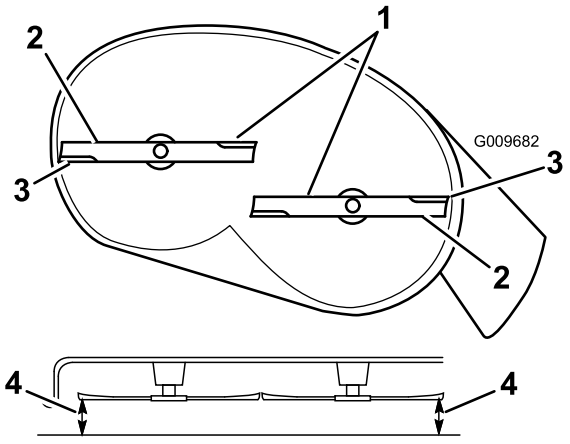

Figure 53

Mower decks with 2 Blades

1. Blades side to side
2. Sail area of blade
3. Outside cutting edges
4. Measure from the tip of the blade to the flat surface here

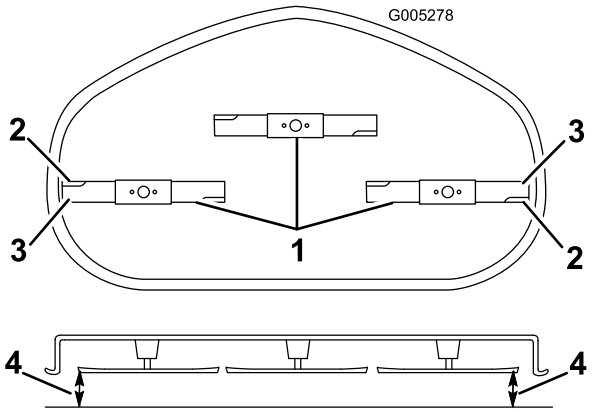

Figure 54
Mower decks with 3 Blades

1. Blades side to side
2. Sail area of blade
3. Outside cutting edges
4. Measure from the tip of the blade to the flat surface here

5. Measure between the outside cutting edges and the flat surface (Figure 53 and Figure 54).

   Note: If both measurements are not within 5 mm (3/16 inch), an adjustment is required; continue with this procedure.

6. Support the weight of mower deck by placing wood blocks under the edges of the mower deck.

   Note: Avoid placing the supports under any anti-scalp rollers if present on the mower deck.

7. Move to the left side of the machine.

8. Check if the side carriage bolt is in the fixed or slotted position (Figure 55).

   Note: If the side carriage bolt is in the fixed position, remove the side carriage bolt and the side-locking nut from the fixed position, and install it into the slotted-adjustment position (Figure 55).

   Note: If the bolt is in the slotted position, the carriage bolt and side locking nut do not need to be removed.

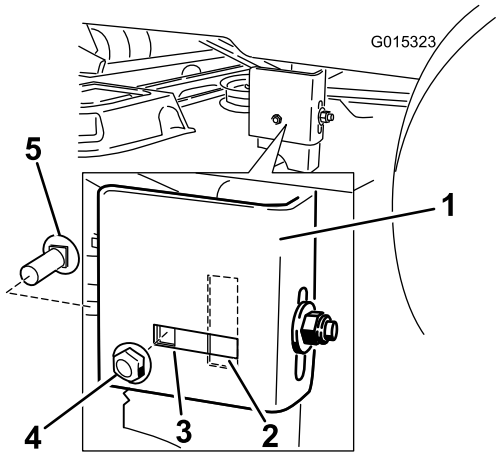

Figure 55

1. Hanger bracket
2. Slotted-adjustment position
3. Fixed position
4. Side locking nut.
5. Side carriage bolt

9. Loosen the rear locking nut on the hanger bracket (Figure 56).

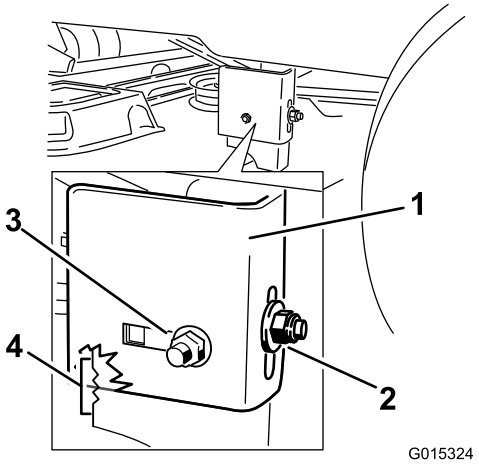

Figure 56

1. Hanger bracket
2. Rear locking nut
3. Side locking nut, slotted position.
4. Adjustment notches

10. Loosen the side locking nut on the hanger bracket just enough to allow the hanger to be adjusted (Figure 56).

11. Use the notches on the welded bracket to measure the amount of adjustment.

    Note: Each notch surface is equivalent to 6.35 mm (1/4 inch), while a single side is 3.2 mm (1/8 inch) as shown in Figure 57.

12. Adjust the height of the mower deck to the desired height.

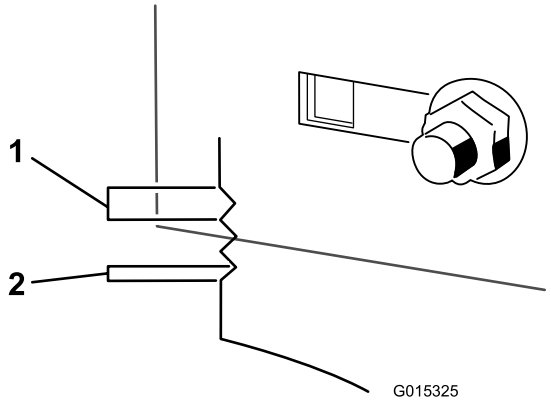

Figure 57

1. 6.35 mm (1/4 inch)
2. 3.2 mm (1/8 inch)

13. Stop the deck at the adjusted position, and tighten the side locking nut on the hanger bracket to hold the new position (Figure 56).
14. Tighten the rear locking nut on the hanger bracket.
15. Continue leveling the deck by checking the front-to-rear blade slope; refer to Adjusting the Front-to-Rear Blade Slope (page 40).

Adjusting the Front-to-Rear Blade Slope

Check the front-to-rear blade level any time you install the mower. If the front of the mower is more than 7.9 mm (5/16 inch) lower than the rear of the mower, adjust the blade level using the following instructions:

1. Park the machine on a level surface and disengage the blade-control switch.
2. Move the motion-control levers outward to the park position, stop the engine, remove the key, and wait for all moving parts to stop before leaving the operating position.
3. Set the height-of-cut lever to middle position.

   Note: Check and adjust the side-to-side blade level if you have not checked the setting; refer to Side-to-Side Leveling (page 38).
4. Carefully rotate the blades so they are facing front to rear (Figure 58 and Figure 59).

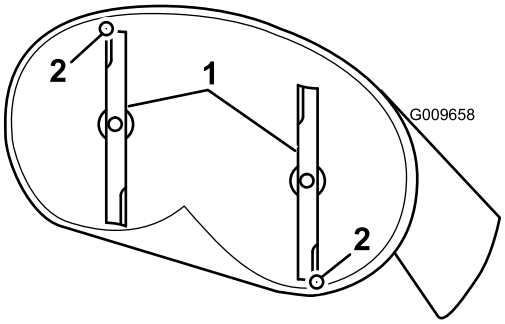

Figure 58

Mower decks with 2 Blades

1. Blades front to rear
2. Measure from the tip of the blade to the flat surface here

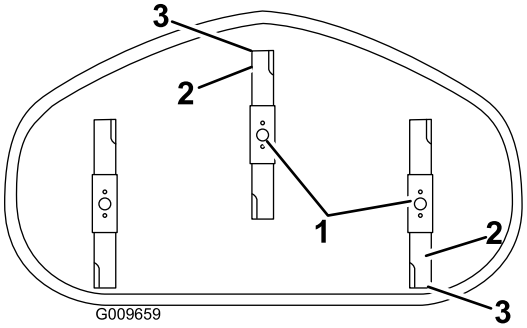

Figure 59

Mower decks with 3 Blades

1. Blades front to rear
2. Outside cutting edges
3. Measure from the tip of the blade to the flat surface here

5. Measure from the tip of the front blade to the flat surface, and the tip of the rear blade to the flat surface (Figure 58 and Figure 59).

   Note: If the front blade tip is not 1.6 to 7.9 mm (1/16 to 5/16 inch) lower than the rear blade tip, adjust the front locknut.
6. To adjust the front-to-rear blade slope, rotate the adjustment nut in the front of the mower (Figure 60).

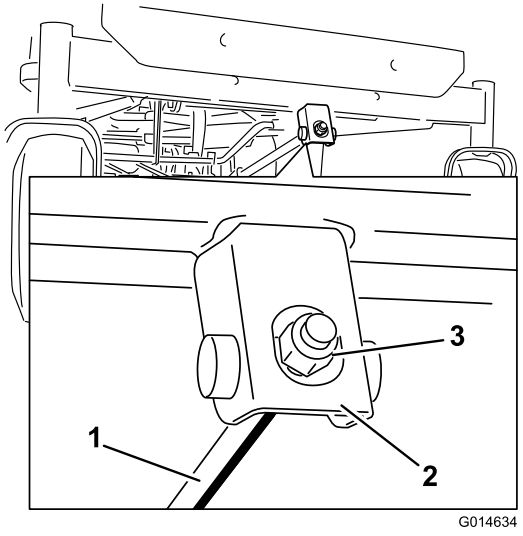

Figure 60

1. Adjusting rod
2. Adjusting block
3. Lock nut

7. To raise the front of the mower, tighten the adjustment nut.
8. To lower the front of the mower, loosen the adjustment nut.
9. After adjustment, check the front-to-rear slope again, continue adjusting the nut until the front blade tip is 1.6 to 7.9 mm (1/16 to 5/16 inch) lower than the rear blade tip (Figure 58 and Figure 59).
10. When the front-to-rear blade slope is correct check the side-to-side level of the mower again, refer to Side-to-Side Leveling (page 38).

Removing the Mower

1. Park the machine on a level surface and disengage the blade-control switch.
2. Move the motion-control levers outward to the park position, stop the engine, remove the key, and wait for all moving parts to stop before leaving the operating position.
3. Lower the height-of-cut lever to the lowest position.
4. Remove the hairpin-cotter pin from the front support rod, and remove the rod from the deck bracket (Figure 61).

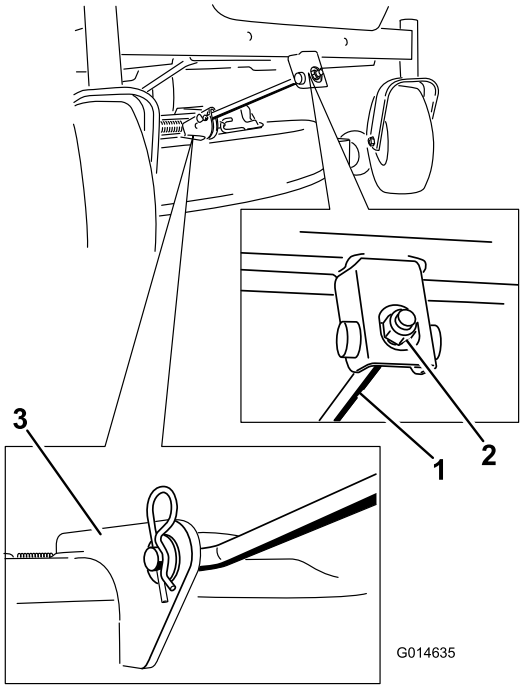

Figure 61

1. Front support rod
2. Locking nut
3. Deck bracket

5. Carefully lower the front of the mower deck to the ground.
6. Lift the mower deck and hanger brackets clear of the rear lift rod and lower the mower carefully to the ground (Figure 62).

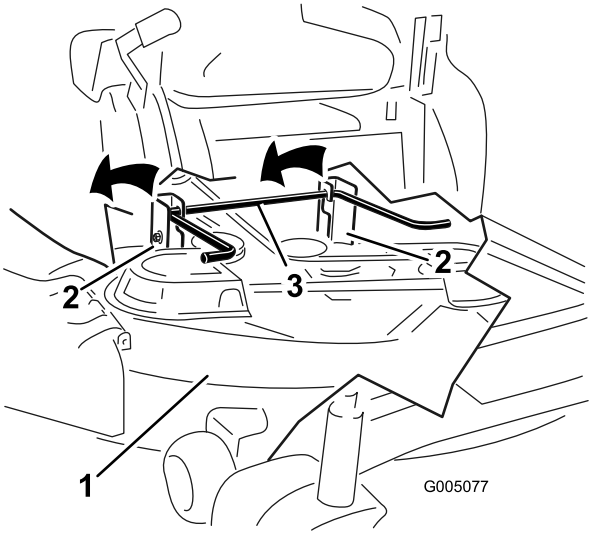

Figure 62

1. Mower deck
2. Hanger bracket
3. Rear lift rod

7. Slide the mower deck rearward to remove the mower belt from the engine pulley.
8. Slide the mower deck out from underneath the machine.

Note: Retain all parts for future installation.

Installing the Mower

1. Park the machine on a level surface and disengage the blade-control switch.
2. Move the motion-control levers outward to the park position, stop the engine, remove the key, and wait for all moving parts to stop before leaving the operating position.
3. Slide the mower under the machine.
4. Lower the height-of-cut lever to the lowest position.
5. Lift the rear of the mower deck and guide the hanger brackets over the rear lift rod (Figure 62).
6. Attach the front support rod to the mower deck with the clevis pin and hairpin-cotter pin (Figure 61).
7. Install the mower belt onto the engine pulley.

Replacing the Grass Deflector

Service Interval: Before each use or daily—Inspect the grass deflector for damage

⚠ WARNING

An uncovered discharge opening could allow the lawn mower to throw objects in the operator's or bystander's direction and result in serious injury. Also, contact with the blade could occur.

Never operate the machine without the grass deflector, the discharge cover, or the grass-collection system in place.

Inspect the grass deflector for damage before each use. Replace any damaged parts before use.

1. Remove the nut (3/8 inch) from the rod under the mower (Figure 63).

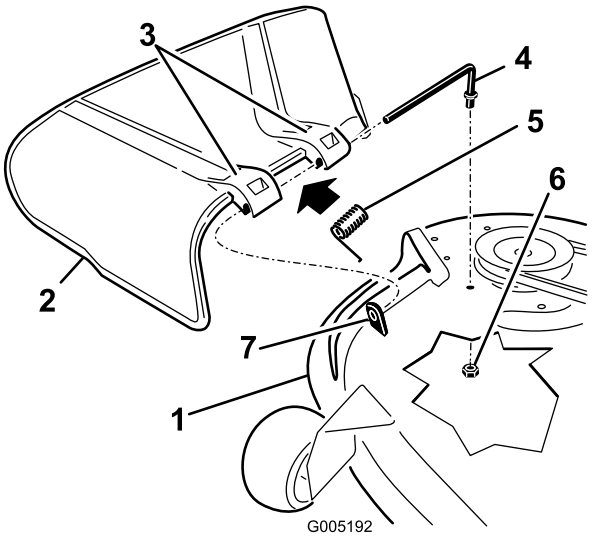

Figure 63

1. Mower deck
2. Grass deflector
3. Grass-deflector bracket
4. Rod
5. Spring
6. Nut (3/8 inch)
7. Short standoff

2. Slide the rod out of the short standoff, the spring, and the grass deflector (Figure 63).
3. Remove the damaged or worn grass deflector.
4. Replace the grass deflector (Figure 63).
5. Slide the rod (straight end), through the rear-grass-deflector bracket.
6. Place the spring on the rod, with the end wires down and between the grass deflector brackets.
7. Slide rod through the second grass-deflector bracket (Figure 63).
8. Insert the rod at the front of the grass deflector into the short standoff on the deck.
9. Secure the rear end of the rod into the mower with a nut (3/8 inch) as shown in Figure 63.

Important: The grass deflector must be spring loaded and in the down position. Lift the deflector up to test that it snaps to the full down position.

Mower Belt Maintenance

Inspecting the Belts

Service Interval: Every 25 hours—Check the belts for wear or cracks.

Check the belts for cracks, frayed edges, burn marks, or any other damage. Replace damaged belts.

Replacing the Mower Belt

Squealing when the belt is rotating, blades slipping when cutting grass, frayed belt edges, burn marks, and cracks are signs of a worn mower belt. Replace the mower belt if any of these conditions are evident.

1. Park the machine on a level surface and disengage the blade-control switch.
2. Move the motion-control levers outward to the park position, stop the engine, remove the key, and wait for all moving parts to stop before leaving the operating position.
3. Set the height-of-cut at the lowest cutting position of 38 mm (1-1/2 inches).
4. Using a spring-removal tool, remove the idler spring from the deck hook to remove tension on the idler pulley, and roll the belt off of the pulleys (Figure 64).

⚠ WARNING

The spring is under tension when installed and can cause personal injury.

Be careful when removing the belt.

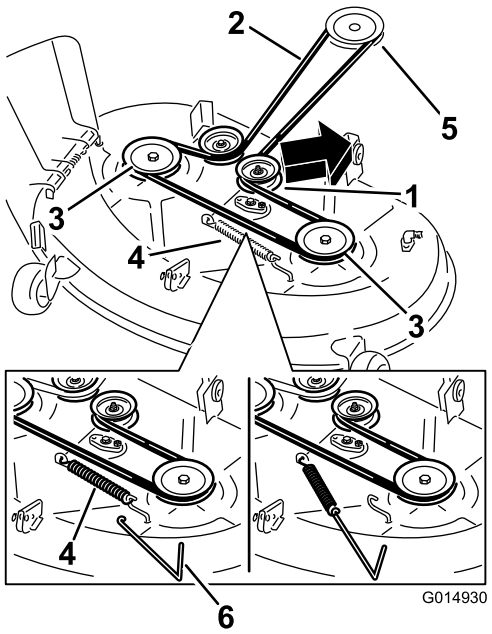

Figure 64
Mower Decks with 2 Blades

1. Idler pulley
2. Mower belt
3. Outside pulley
4. Spring
5. Engine pulley
6. Spring-removal tool

5. Route the new belt around the engine pulley and mower pulleys (Figure 64).
6. Using a spring-removal tool, install the idler spring over the deck hook, and place tension on the idler pulley and mower belt (Figure 64).

Cleaning

Washing the Underside of the Mower

Service Interval: After each use—Clean the mower-deck housing.

Wash the underside of the mower after each use to prevent grass buildup for improved mulch action and clipping dispersal.

1. Park the machine on a level surface and disengage the blade-control switch.
2. Move the motion-control levers outward to the park position, stop the engine, remove the key, and wait for all moving parts to stop before leaving the operating position.
3. Attach the hose coupling to the end of the mower washout fitting, and turn the water on high (Figure 65).

   Note: Spread petroleum jelly on the washout fitting O-ring to make the coupling slide on easier and protect the O-ring.

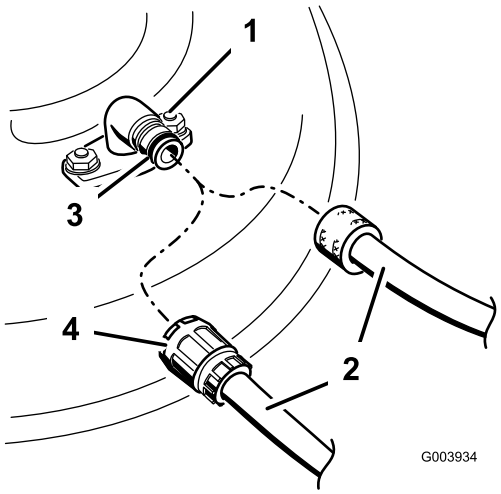

Figure 65

1. Washout fitting
2. Hose
3. O-ring
4. Coupling

4. Lower the mower to the lowest height-of-cut.
5. Sit on the seat and start the engine.
6. Engage the blade-control switch and let the mower run for 1 to 3 minutes.
7. Disengage the blade-control switch, stop the engine, remove the ignition key, and wait for all moving parts to stop.
8. Turn the water off and remove the coupling from the washout fitting.

Note: If the mower is not clean after one washing, soak it and let it stand for 30 minutes. Then, repeat the process.

9. Run the mower again for 1 to 3 minutes to remove excess water.

⚠ WARNING

A broken or missing washout fitting could expose you and others to thrown objects or blade contact. Contact with blade or thrown debris can cause injury or death.

- **Replace broken or missing washout fitting immediately, before using mower again.**
- **Never put your hands or feet under the mower or through openings in the mower.**

Storage

Cleaning and Storage

1. Disengage the blade control switch, move the motion controls outward to the park position, stop the engine, and remove the key.
2. Remove grass clippings, dirt, and grime from the external parts of the entire machine, especially the engine. Clean dirt and chaff from the outside of the engine cylinder head fins and blower housing.

   Important: You can wash the machine with mild detergent and water. Do not pressure wash the machine. Avoid excessive use of water, especially near the control panel, under the seat, around the engine, hydraulic pumps, and motors.
3. Service the air cleaner; refer to Servicing the Air Cleaner (page 28).
4. Grease and oil the machine; refer to Lubrication (page 27).
5. Change the crankcase oil and filter; refer to Servicing the Engine Oil (page 28).
6. Check the tire pressure; refer to Checking the Tire Pressure (page 35).
7. Charge the battery; refer to Charging the Battery (page 33).
8. Check the condition of the blades; refer to Servicing the Cutting Blades (page 36).
9. Prepare the machine for storage when non-use occurs over 30 days. Prepare the machine for storage as follows.
10. Add a petroleum based stabilizer/conditioner to the fuel in the tank. Follow the mixing instructions from the stabilizer manufacturer. Do not use an alcohol based stabilizer (ethanol or methanol).

    Note: A fuel stabilizer/conditioner is most effective when mixed with fresh gasoline and used at all times.

    Run the engine to distribute the conditioned fuel through the fuel system (5 minutes).

    Stop the engine, allow it to cool, and drain the fuel tank.

    Restart the engine and run it until it stops.

    Choke the engine. Start and run the engine until it will not start.

    Dispose of fuel properly. Recycle pursuant to local codes.

    Important: Do not store stabilizer/conditioned gasoline over 90 days.
11. Remove the spark plug(s) and check its condition; refer to Servicing the Spark Plug (page 30). With the spark plug(s) removed from the engine, pour two tablespoons of engine oil into the spark plug hole. Use the starter to crank the engine and distribute the oil inside the cylinder. Install the spark plug(s). Do not install the wire on the spark plug(s).
12. Clean any dirt and chaff from the top of the mower.
13. Scrape any heavy buildup of grass and dirt from the underside of the mower, then wash the mower with a garden hose.
14. Check the condition of the drive and mower belts.
15. Check and tighten all bolts, nuts, and screws. Repair or replace any part that is worn or damaged.
16. Paint all scratched or bare metal surfaces. Paint is available from your Authorized Service Dealer.
17. Store the machine in a clean, dry garage or storage area. Remove the key from the ignition switch and keep it in a memorable place. Cover the machine to protect it and keep it clean.

Troubleshooting

Problem	Possible Cause	Corrective Action
The engine overheats.	1. The engine load is excessive. 2. The oil level in the crankcase is low. 3. The cooling fins and air passages under the engine-blower housing are plugged. 4. The air cleaner is dirty. 5. Dirt, water, or stale fuel is in the fuel system.	1. Reduce the ground speed. 2. Add oil to the crankcase. 3. Remove the obstruction from the cooling fins and air passages. 4. Clean or replace the air-cleaner element. 5. Contact an Authorized Service Dealer
The starter does not crank.	1. The blade-control switch is engaged. 2. The motion-control levers are not in the park position. 3. The battery is dead. 4. The electrical connections are corroded or loose. 5. A fuse is blown. 6. A relay or switch is damaged.	1. Move the blade-control switch to Disengaged. 2. Move the motion-control levers outward to the park position. 3. Charge the battery. 4. Check the electrical connections for good contact. 5. Replace the fuse. 6. Contact an Authorized Service Dealer.
The engine does not start, starts hard, or fails to keep running.	1. The fuel tank is empty. 2. The choke is not on. 3. The air cleaner is dirty. 4. The spark plug wire(s) is loose or disconnected. 5. The spark plug(s) is pitted, fouled, or the gap is incorrect. 6. There is dirt in fuel filter. 7. Dirt, water, or stale fuel is in fuel system. 8. There is incorrect fuel in the fuel tank. 9. The oil level in the crankcase is low.	1. Fill the fuel tank. 2. Move the choke lever to On. 3. Clean or replace the air-cleaner element. 4. Install the wire(s) on the spark plug. 5. Install a new, correctly gapped spark plug(s). 6. Replace the fuel filter. 7. Contact an Authorized Service Dealer. 8. Drain the tank and replace the fuel with the proper type. 9. Add oil to the crankcase.
The machine does not drive.	1. The bypass valves are open. 2. The traction belts are worn, loose, or broken. 3. The traction belts are off of the pulleys. 4. The transmission has failed.	1. Close the tow valves. 2. Contact an Authorized Service Dealer. 3. Contact an Authorized Service Dealer. 4. Contact an Authorized Service Dealer.
There is an abnormal vibration.	1. The engine-mounting bolts are loose. 2. The engine pulley, idler pulley, or blade pulley is loose. 3. The engine pulley is damaged. 4. The cutting blade(s) is/are bent or unbalanced. 5. A blade-mounting bolt is loose. 6. A blade spindle is bent.	1. Tighten the engine-mounting bolts. 2. Tighten the appropriate pulley. 3. Contact an Authorized Service Dealer. 4. Install a new cutting blade(s). 5. Tighten the blade-mounting bolt. 6. Contact an Authorized Service Dealer.

Problem	Possible Cause	Corrective Action
The cutting height is uneven.	1. The blade(s) is not sharp. 2. A cutting blade(s) is/are bent. 3. The mower is not level. 4. An anti-scalp wheel is not set correctly. 5. The underside of the mower is dirty. 6. The tire pressure is incorrect. 7. A blade spindle is bent.	1. Sharpen the blade(s). 2. Install a new cutting blade(s). 3. Level the mower from side-to-side and front-to-rear. 4. Adjust the anti-scalp wheel height. 5. Clean the underside of the mower. 6. Adjust the tire pressure. 7. Contact an Authorized Service Dealer.
The blades do not rotate.	1. The drive belt is worn, loose or broken. 2. The drive belt is off of the pulley. 3. The Power Take-Off (PTO) switch or PTO clutch is faulty. 4. The mower belt is worn, loose, or broken.	1. Install a new drive belt. 2. Install the drive belt and check the adjusting shafts and belt guides for the correct position. 3. Contact an Authorized Service Dealer. 4. Install a new mower belt.

Schematics

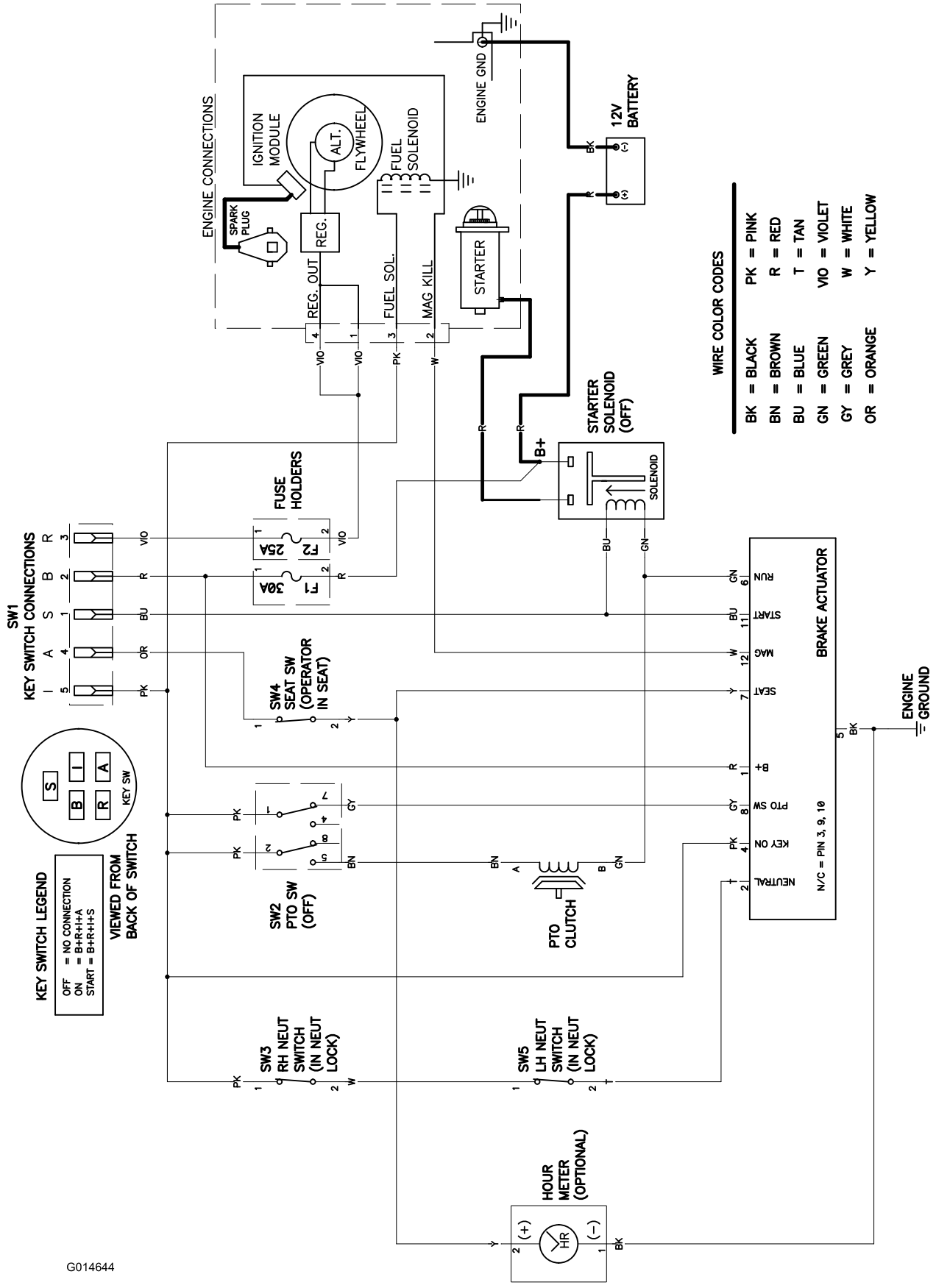

Electrical Diagram (Rev. A)

Notes:

Notes:

International Distributor List

Distributor:	Country:	Phone Number:	Distributor:	Country:	Phone Number:
Agrolanc Kft	Hungary	36 27 539 640	Maquiver S.A.	Colombia	57 1 236 4079
Balama Prima Engineering Equip.	Hong Kong	852 2155 2163	Maruyama Mfg. Co. Inc.	Japan	81 3 3252 2285
B-Ray Corporation	Korea	82 32 551 2076	Mountfield a.s.	Czech Republic	420 255 704 220
Casco Sales Company	Puerto Rico	787 788 8383	Mountfield a.s.	Slovakia	420 255 704 220
Ceres S.A.	Costa Rica	506 239 1138	Munditol S.A.	Argentina	54 11 4 821 9999
CSSC Turf Equipment (pvt) Ltd.	Sri Lanka	94 11 2746100	Norma Garden	Russia	7 495 411 61 20
Cyril Johnston & Co.	Northern Ireland	44 2890 813 121	Oslinger Turf Equipment SA	Ecuador	593 4 239 6970
Cyril Johnston & Co.	Republic of Ireland	44 2890 813 121	Oy Hako Ground and Garden Ab	Finland	358 987 00733
Equiver	Mexico	52 55 539 95444	Parkland Products Ltd.	New Zealand	64 3 34 93760
Femco S.A.	Guatemala	502 442 3277	Perfetto	Poland	48 61 8 208 416
ForGarder OU	Estonia	372 384 6060	Pratoverde SRL.	Italy	39 049 9128 128
G.Y.K. Company Ltd.	Japan	81 726 325 861	Prochaska & Cie	Austria	43 1 278 5100
Geomechaniki of Athens	Greece	30 10 935 0054	RT Cohen 2004 Ltd.	Israel	972 986 17979
Golf international Turizm	Turkey	90 216 336 5993	Riversa	Spain	34 9 52 83 7500
Guandong Golden Star	China	86 20 876 51338	Lely Turfcare	Denmark	45 66 109 200
Hako Ground and Garden	Sweden	46 35 10 0000	Solvert S.A.S.	France	33 1 30 81 77 00
Hako Ground and Garden	Norway	47 22 90 7760	Spypros Stavrinides Limited	Cyprus	357 22 434131
Hayter Limited (U.K.)	United Kingdom	44 1279 723 444	Surge Systems India Limited	India	91 1 292299901
Hydroturf Int. Co Dubai	United Arab Emirates	97 14 347 9479	T-Markt Logistics Ltd.	Hungary	36 26 525 500
Hydroturf Egypt LLC	Egypt	202 519 4308	Toro Australia	Australia	61 3 9580 7355
Irrimac	Portugal	351 21 238 8260	Toro Europe NV	Belgium	32 14 562 960
Irrigation Products Int'l Pvt Ltd.	India	0091 44 2449 4387	Valtech	Morocco	212 5 3766 3636
Jean Heybroek b.v.	Netherlands	31 30 639 4611	Victus Emak	Poland	48 61 823 8369

European Privacy Notice

The Information Toro Collects
Toro Warranty Company (Toro) respects your privacy. In order to process your warranty claim and contact you in the event of a product recall, we ask you to share certain personal information with us, either directly or through your local Toro company or dealer.

The Toro warranty system is hosted on servers located within the United States where privacy law may not provide the same protection as applies in your country.

BY SHARING YOUR PERSONAL INFORMATION WITH US, YOU ARE CONSENTING TO THE PROCESSING OF YOUR PERSONAL INFORMATION AS DESCRIBED IN THIS PRIVACY NOTICE.

The Way Toro Uses Information
Toro may use your personal information to process warranty claims, to contact you in the event of a product recall and for any other purpose which we tell you about. Toro may share your information with Toro's affiliates, dealers or other business partners in connection with any of these activities. We will not sell your personal information to any other company. We reserve the right to disclose personal information in order to comply with applicable laws and with requests by the appropriate authorities, to operate our systems properly or for our own protection or that of other users.

Retention of your Personal Information
We will keep your personal information as long as we need it for the purposes for which it was originally collected or for other legitimate purposes (such as regulatory compliance), or as required by applicable law.

Toro's Commitment to Security of Your Personal Information
We take reasonable precautions in order to protect the security of your personal information. We also take steps to maintain the accuracy and current status of personal information.

Access and Correction of your Personal Information
If you would like to review or correct your personal information, please contact us by email at legal@toro.com.

Australian Consumer Law

Australian customers will find details relating to the Australian Consumer Law either inside the box or at your local Toro Dealer.

The Toro Warranty and The Toro GTS Starting Guarantee

Conditions and Products Covered

The Toro Company and its affiliate, Toro Warranty Company, pursuant to an agreement between them, jointly promise to repair for the original purchaser[1]the Toro Product listed below if defective in materials or workmanship or if the Toro GTS (Guaranteed to Start) engine will not start on the first or second pull, provided the routine maintenance required in the *Operator's Manual* have been performed.

The following time periods apply from the date of purchase:

Products	Warranty Period
Walk Power Mowers	
• Cast Deck	5 years Residential Use[2] 90 Days Commercial Use
• Engine	5 years GTS Guarantee, Residential Use[3]
• Battery	2 years
• Steel Deck	2 years Residential Use[2] 30 Days Commercial Use
• Engine	2 years GTS Guarantee, Residential Use[3]
TimeMaster Mowers	3 years Residential Use[2] 90 Days Commercial Use
• Engine	3 years GTS Guarantee, Residential Use[3]
• Battery	2 years
Electric Hand Held Products	2 years Residential Use[2] No Warranty for Commercial Use
Snowthrowers	
• Single Stage	2 years Residential Use[2] 45 Days Commercial Use
• Engine	2 years GTS Guarantee, Residential Use[3]
• Two Stage	3 years Residential Use[2] 45 Days Commercial Use
• Chute, chute deflector and impeller housing cover	Lifetime (original owner only)[5]
Electric Snowthrowers	2 years Residential Use[2] No Warranty for Commercial Use
All Ride-On Units Below	
• Engine	See engine manufacturer's warranty[4]
• Battery	2 years Residential Use[2]
• Attachments	2 years Residential Use[2]
DH Lawn & Garden Tractors	2 years Residential Use[2] 30 Days Commercial Use
XLS Lawn & Garden Tractors	3 years Residential Use[2] 30 Days Commercial Use
TimeCutter	3 years Residential Use[2] 30 Days Commercial Use
TITAN Mowers	3 years or 240 hours[5]
• Frame	Lifetime (original owner only)[6]

[1]Original Purchaser means the person who originally purchased the Toro Product.

[2]Residential use means use of the product on the same lot as your home. Use at more than one location is considered commercial use and the commercial use warranty would apply.

[3]The Toro GTS Starting Guarantee does not apply when the product is used commercially.

[4]Some engines used on Toro Products are warranted by the engine manufacturer.

[5]Whichever occurs first.

[6]Lifetime Frame Warranty - If the main frame, consisting of the parts welded together to form the tractor structure that other components such as the engine are secured to, cracks or breaks in normal use, it will be repaired or replaced, at Toro's option, under warranty at no cost for parts and labor. Frame failure due to misuse or abuse and failure or repair required due to rust or corrosion are not covered.

Warranty may be denied if the hour meter is disconnected, altered, or shows signs of being tampered with.

Owner Responsibilities

You must maintain your Toro Product by following the maintenance procedures described in the *Operator's Manual*. Such routine maintenance, whether performed by a dealer or by you, is at your expense.

Instructions for Obtaining Warranty Service

If you think that your Toro Product contains a defect in materials or workmanship, follow this procedure:

1. Contact your seller to arrange service of the product. If for any reason it is impossible for you to contact your seller, you may contact any Toro Authorized Distributor to arrange service. See attached Distributor List.
2. Bring the product and your proof of purchase (sales receipt) to the servicing outlet. If for any reason you are dissatisfied with the servicing outlet's analysis or with the assistance provided, contact us at:

   Toro Customer Care Department, RLC Division
   Toro Warranty Company
   8111 Lyndale Avenue South
   Bloomington, MN 55420-1196
   001–952–948–4707

Items and Conditions Not Covered

There is no other express warranty except for special emission system coverage and engine warranty coverage on some products. This express warranty does not cover the following:

- Cost of regular maintenance service or parts, such as filters, fuel, lubricants, oil changes, spark plugs, air filters blade sharpening or worn blades, cable/linkage adjustments, or brake and clutch adjustments
- Components failing due to normal wear
- Any product or part which has been altered or misused or neglected and requires replacement or repair due to accidents or lack of proper maintenance
- Pickup and delivery charges
- Repairs or attempted repairs by anyone other than an Authorized Toro Service Dealer
- Repairs necessary due to failure to follow recommended fuel procedure (consult *Operator's Manual* for more details)
  - Removing contaminants from the fuel system is not covered
  - Use of old fuel (more than one month old) or fuel which contains more than 10% ethanol or more that 15% MTBE
  - Failure to drain the fuel system prior to any period of non-use over one month
- Repairs or adjustments to correct starting difficulties due to the following:
  - Failure to follow proper maintenance procedures or recommended fuel procedure
  - Rotary mower blade striking an object
- Special operational conditions where starting may require more than two pulls:
  - First time starts after extended period of non-use over three months or seasonal storage
  - Cool temperature starts such as those found in early spring and late autumn
  - Improper starting procedures - if you are having difficulty starting your unit, please check the *Operator's Manual* to ensure that you are using the correct starting procedures. This can save an unnecessary visit to an Authorized Toro Service Dealer.

General Conditions

The purchaser is covered by the national laws of each country. The rights to which the purchaser is entitled with the support of these laws are not restricted by this warranty.