FORM NO. 3313-953 Rev. C

TORO®

MODEL NO. 38180-0000001
THRU 2000001 & UP
MODEL NO. 38185-0000001
THRU 2000001 & UP

OPERATOR'S MANUAL

CCR 2000™ SNOWTHROWER

⚠ SAFETY INSTRUCTIONS

To assure maximum safety, best performance, and to gain knowledge of the product, it is essential that you or any other operator of the snowthrower read and understand the contents of this manual before the motor is ever started. Pay particular attention to the safety alert symbol ⚠ which means CAUTION, WARNING OR DANGER — "personal safety instruction." Read and understand the instruction because it has to do with safety. Failure to comply with instruction may result in personal injury.

This snowthrower is designed and tested to offer safe and effective service, provided it is operated in strict accordance with the following Safety Instructions. Failure to comply with the following instructions **MAY RESULT IN PERSONAL INJURY.**

WARNING: Engine exhaust contains carbon monoxide which is an odorless, deadly poison. Carbon monoxide is also known to the State of California to cause birth defects. Do not run engine indoors or in an enclosed area.

BEFORE OPERATING

1. Read and understand the contents of this manual before operating the snowthrower. Become familiar with all controls and know how to stop quickly.

2. Never allow children to operate the snowthrower. Adults should operate the snowthrower only after reading this manual.

3. Keep everyone, especially children and pets, away from area of operation.

4. Inspect area thoroughly where snowthrower will be used. Remove doormats, sleds, boards, sticks, wire, and any other foreign objects which might be picked up and thrown by the snowthrower.

5. Keep all shields and safety devices in place. If a shield, safety device, or decal is illegible or damaged, repair or replace it before beginning operation. Also, tighten any loose nuts, bolts, or screws.

6. Wear adequate winter clothing and rubber boots that will assure proper footing on slippery surfaces. Do not wear loose fitting clothing that could possibly get caught in moving parts.

7. Because fuel is highly flammable, handle it carefully.

A. Use an approved container.

B. Fill fuel tank outdoors, not indoors. **NEVER ADD FUEL TO AN ENGINE THAT IS RUNNING OR HOT.**

C. Install gas cap on fuel container and gas tank, and wipe up any spilled gasoline before starting engine.

8. Allow engine to warm up outdoors before operating. Do not run engine indoors.

WHILE OPERATING

9. Use only the extension cord provided with the CCR 2000 Electric Start Model. Do not plug the extension cord into outlet while standing in water or when hands are wet. Do not use cord if gasoline has been spilled. If extension cord is damaged, replace immediately (Part No. 28-9170).

10. Never direct discharge toward or operate snowthrower near bystanders, glass enclosures, automobiles and trucks, window wells, or a drop-off. Never allow anyone in front of snowthrower.

11. Keep people and pets a safe distance away from the snowthrower and area of operation.

12. Operate the snowthrower only when there is good visibility or light. Always maintain secure footing and balance and keep a firm grip on the handle. Walk; never run.

13. DO NOT USE SNOWTHROWER ON A ROOF.

14. Be attentive when using the snowthrower, and stay alert for holes in the terrain and other hidden hazards.

15. STAY AWAY FROM DISCHARGE OPENING WHILE OPERATING THE SNOWTHROWER. Keep face, hands, feet, and any other part of your body or clothing away from concealed, moving, or rotating parts.

©The Toro Company-1989, Rev. 1990, 1991

⚠ SAFETY INSTRUCTIONS

16. Never clear snow off steep slopes or across the faces of slopes. Exercise extreme caution when changing direction on slopes.

17. Do not overload the snowthrower by clearing snow at too fast a rate.

18. Use extreme caution when crossing or operating snowthrower on walks, roads, or gravel or crushed rock drives. Refer to Operating Instructions, page 7, item 4 for correct operating procedure.

19. If a foreign object is hit or snow-thrower vibrates abnormally, stop engine by turning key to OFF and wait for all moving parts to stop. Check snowthrower immediately for possible damage, an obstruction, or loose parts. Vibration is generally a sign of trouble. Repair any damage before operating snowthrower again.

20. Before adjusting, cleaning, repairing, or inspecting the snowthrower, or before unclogging the discharge chute, stop engine by turning key to OFF and wait for all moving parts to stop. Do not make adjustments while engine is running.

21. WHENEVER YOU LEAVE THE OPERATING POSITION, STOP ENGINE BY TURNING KEY TO OFF. REMOVE KEY FROM SWITCH IF UNIT WILL BE UNATTENDED.

22. Let snowthrower run for a few minutes after clearing snow so moving parts do not freeze.

MAINTAINING SNOWTHROWER

23. REMOVE KEY FROM SWITCH when storing snowthrower. Store key in a memorable place.

24. Never store snowthrower with fuel in fuel tank inside a building where open flame or sparks are present. Allow engine to cool before storing. **NEVER STORE SNOWTHROWER IN HOUSE (LIVING AREA) OR BASEMENT BECAUSE GASOLINE AND FUMES ARE HIGHLY FLAMMABLE, EXPLOSIVE, AND DANGEROUS IF INHALED.**

25. Perform only those maintenance instructions described in this manual. Remove key from switch before performing maintenance procedures to prevent the possibility of accidental starting. If major repairs are ever needed, contact your local Authorized TORO Service Dealer for assistance.

26. Keep snowthrower in safe operating condition by keeping nuts, bolts, and screws tight. Check all fasteners frequently to assure they are tight.

27. To assure optimum performance and safety, purchase genuine TORO replacement parts and accessories to keep your TORO all TORO. **NEVER USE "WILL FIT" REPLACEMENT PARTS AND ACCESSORIES.** The TORO logo assures genuineness.

⚠ SAFETY SYMBOL GLOSSARY

Safety decals and instructions are easily visible to the operator and are located near any area of potential danger. Replace any decal that is damaged or lost.

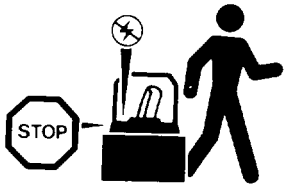

Whenever you leave the operating position, stop engine by turning key to OFF.



Rotor drive—Engaged

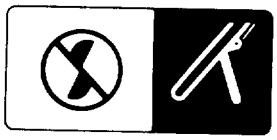

Rotor drive—Disengaged



Shut off engine before unclogging discharge chute



Avoid injury from rotating auger by keeping hands, feet, and clothing away.



Read and understand operator's manual

SAFETY SYMBOL GLOSSARY



Primer pump



Choke on



Recoil starter



Ignition off



Ignition on



Stop engine to adjust, unclog, or remove debris

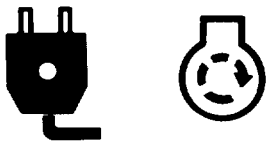

110 volt starter

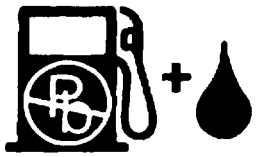

50:1 ratio unleaded gasoline to 2-cycle oil

TABLE OF CONTENTS

	Page
Assembly Instructions	3
Before Operating	5
Operating Instructions	6
Maintenance	8
General Maintenance	8
Adjusting Control Bar	8
Draining Gasoline	8
Replacing Scraper	8
Replacing Drive Belt	9
Replacing Spark Plug	10
Adjusting Carburetor	10
Replacing Rotor Blades	10
Storing Snowthrower	11
Toro Service Support	11
Product Identification	11
The Toro Starting Guarantee	12
Guaranteed To Start Maintenance Record	14
The Toro Total Coverag Guarantee	

ASSEMBLY INSTRUCTIONS

Note: Determine left and right sides of snowthrower by standing in the normal operating position.

INSTALL WHEELS (Fig. 1)

1. Slide the **short** spacer and a wheel onto the right axle end. The side of the wheel with six spokes must face the center of the axle.

2. Slide a pushnut onto the end of the axle.

3. Place a wood block under opposite end of axle when mounting pushnut.

4. Using a hammer, strike the pushnut to seat the nut FIRMLY in place.

5. For the left side, slide the **long** spacer and a wheel onto the left axle end. The side of the wheel with six spokes must face the center of the axle. Repeat steps 2–4.

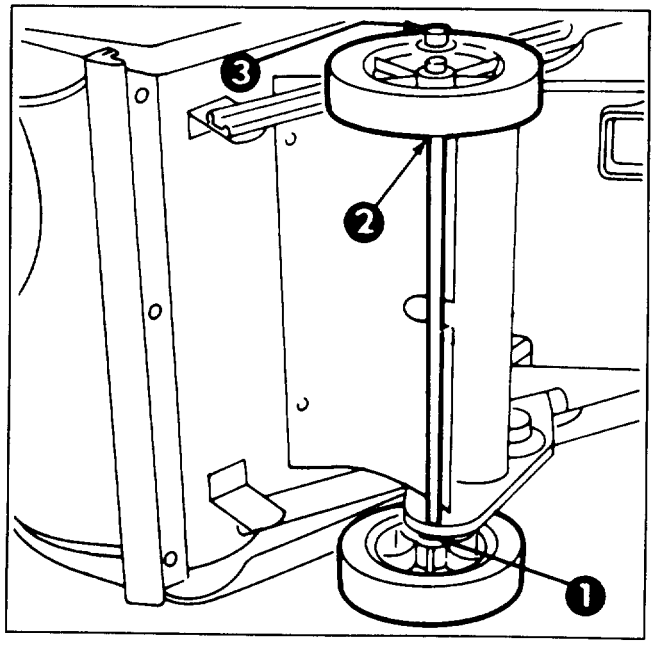

Figure 1

1. Short spacer 2. Long spacer 3. Push nut

ASSEMBLY INSTRUCTIONS

INSTALL CHUTE CRANK (Fig. 2)

1. Insert flattened end of chute crank through hole in shroud while aligning mounting bracket with holes in lower handle. Slowly rotate crank until flattened end fits into hidden gear opening and chute ring turns with crank. Make sure plastic bushing is fully inserted into hole in mounting bracket, the secure mounting bracket to handle with (2) capscrews and locknuts.

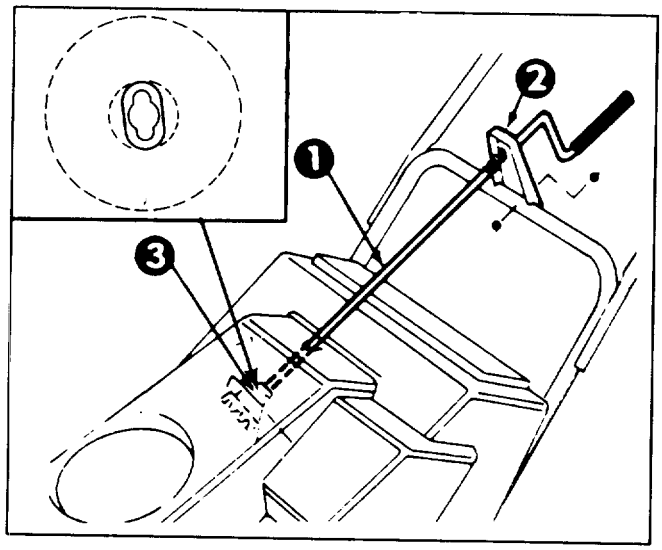

Figure 2

1. Chute crank
2. Mounting bracket
3. Gear
4. Plastic bushing

INSTALL DISCHARGE CHUTE (Fig. 3)

1. Set discharge chute onto chute ring. Align hole in back of chute with center hole in ring and install a carriage bolt and sems locknut. Position nut on outside of chute.

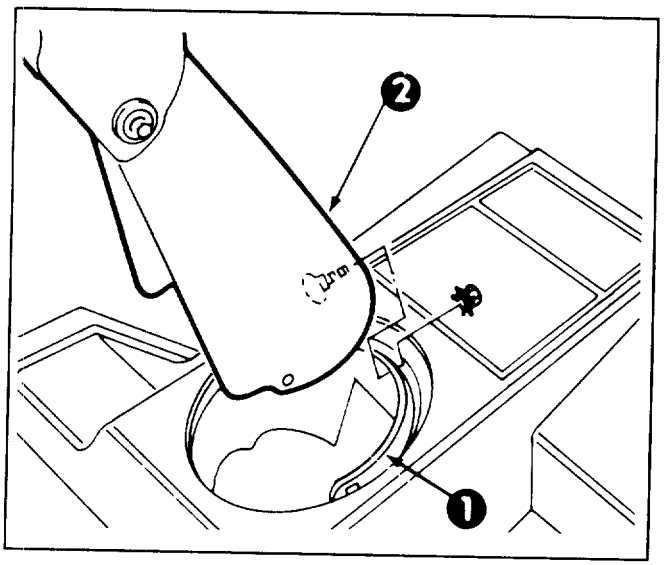

Figure 3

1. Chute ring
2. Discharge chute

Note: Chute ring may be rotated to ease assembly of discharge chute.

2. Secure chute to remaining holes in chute ring and tighten all nuts **SECURELY**.

INSTALL HANDLE (Fig. 4)

1. Remove tie securing control cable to lower handle.

2. Secure upper and lower handle in place with (3) handle bolts, (1) eyebolt, and (4) locknuts. Use eyebolt to mount lower left side of handle. Eyebolt must be positioned perpendicular to handle when tightened.

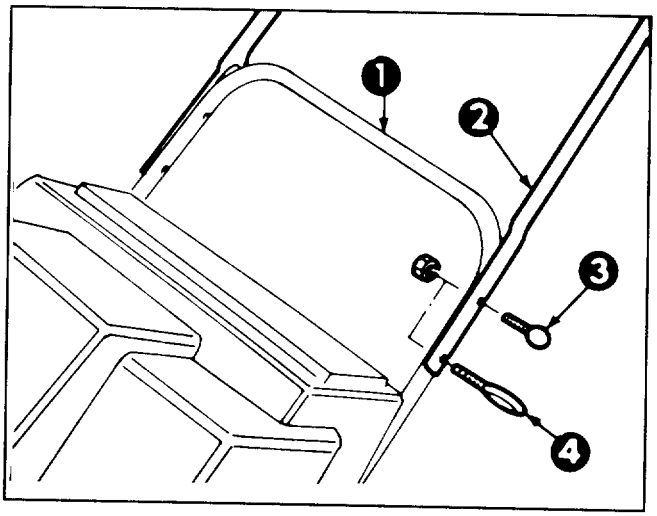

Figure 4

1. Lower handle
2. Upper handle
3. Handle bolt
4. Eyebolt

INSTALL CONTROL CABLE (Fig. 5)

1. Route control cable through eyebolt and hook upper end in rear hole (hole with arrow) in control bar bracket.

2. Move control bar back toward handle until slack in cable is removed. The gap between the control bar bracket and handle should be approximately 1/16"–1/8". See insert, Figure 5. If an adjustment is required, refer to Adjusting Control Bar, page 8.

Note: The control cable must always have slack in it when in the disengaged position.

ASSEMBLY INSTRUCTIONS

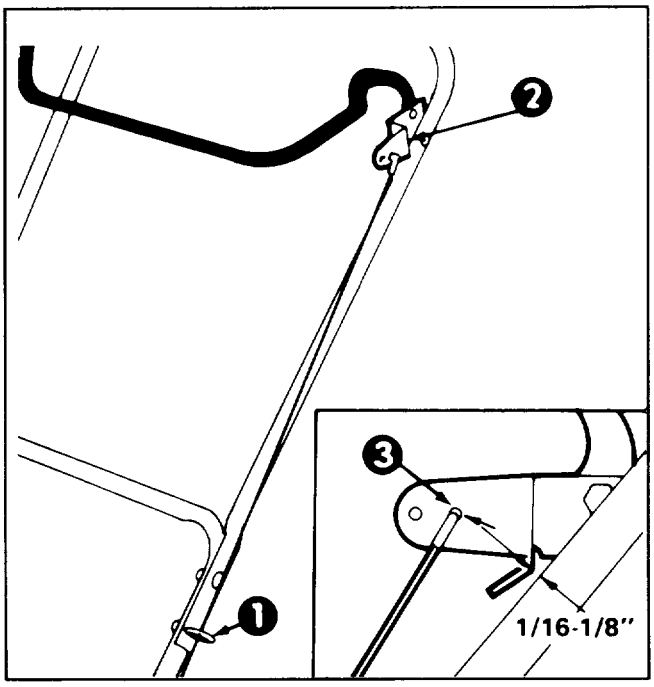

Figure 5

1. Eyebolt
2. Control bar bracket
3. Rear hole

BEFORE OPERATING

WARNING

DANGER: Gasoline is extremely flammable and explosive under certain conditions. Do not smoke when handling fuel and keep fuel far away from open flames and sparks. Never buy more than a 30 day supply of gasoline. Store it in an approved container. Keep gasoline out of reach of children.

Refuel outdoors and only when engine is cold. Do not fill tank full. Fill tank to within 1/4" to 1/2" (6 to 13 mm) from top of tank, not into the filler neck. This space is for expansion of fuel. Use funnel or spout to prevent spilling. Wipe up any spilled gas, and install gasoline container cap and snowthrower fuel tank cap securely before starting the engine. Assure area is dry before starting engine.

MIX GASOLINE AND OIL (Fig. 6)

1. APPROVED OIL—For simplicity and best engine performance, mix the contents of one 5.2-ounce bottle of Toro 50:1 Two-Cycle Oil with two gallons of fresh, unleaded regular gasoline. You can also use Toro "Easy Mix" Two-Cycle Oil (3.2 ounce bottle mixed one per gallon of gasoline; 40:1 ratio) in this Toro two-cycle engine. Leaded regular gasoline may be used if unleaded regular is not available.

Toro Two-Cycle Oil is specially formulated to provide superior lubrication, make starting easy, and prolong engine life. If Toro Two-Cycle Oil is not available, mix two gallons of gasoline and 5.2 ounces of another high grade two-cycle oil that has the NMMA or BIA-TCW certification printed on the label.

NEVER USE AUTOMOTIVE OIL (i.e. SAE 30, 10W30 etc.), TWO-CYCLE OIL THAT IS NOT CERTIFIED NMMA/BIA-TCW, OR THE WRONG MIX RATIO BECAUSE THE ENGINE CAN BE DAMAGED, AND IT WOULD NOT BE COVERED BY THE TORO WARRANTY.

2. Mixing Gasoline and Oil—Pour a half gallon of gasoline into an approved gasoline container (preferably plastic, not metal) and add the correct amount of two-cycle oil. Reinstall cap on gasoline container and shake the container to mix oil and gas thoroughly. Remove cap and add remaining amount of gasoline.

BEFORE OPERATING

Toro also recommends that Toro Stabilizer/Conditioner be used regularly in all Toro gasoline powered products during operation and storage seasons. Toro Stabilizer/Conditioner cleans the engine during operation and prevents gum-like varnish deposits from forming in the engine during periods of storage.

IMPORTANT: NEVER USE METHANOL, GASOLINE CONTAINING METHANOL, GASOHOL CONTAINING MORE THAN 10% ETHANOL, PREMIUM GASOLINE, OR WHITE GAS BECAUSE ENGINE FUEL SYSTEM DAMAGE COULD RESULT.

DO NOT USE FUEL ADDITIVES OTHER THAN THOSE MANUFACTURED FOR FUEL STABILIZATION DURING STORAGE SUCH AS TORO'S STABILIZER/CONDITIONER OR A SIMILAR PRODUCT. TORO'S STABILIZER/CONDITIONER IS A PETROLEUM DISTILLATE BASED CONDITIONER/STABILIZER. TORO DOES NOT RECOMMEND STABILIZERS WITH AN ALCOHOL BASE SUCH AS ETHANOL, METHANOL OR ISOPROPYL. ADDITIVES SHOULD NOT BE USED TO TRY TO ENHANCE THE POWER OR PERFORMANCE OF MACHINE.

NOTE: Do not mix gasoline and oil in the product fuel tank. Oil that is at room temperature mixes easier and more thoroughly than cold oil.

50:1 GAS/OIL Mixing Chart

U.S. GALLON	
Gasoline	**Oil**
1 gallon	2.6 oz.
1.5 gallons	3.9 oz.
2 gallons	5.2 oz.

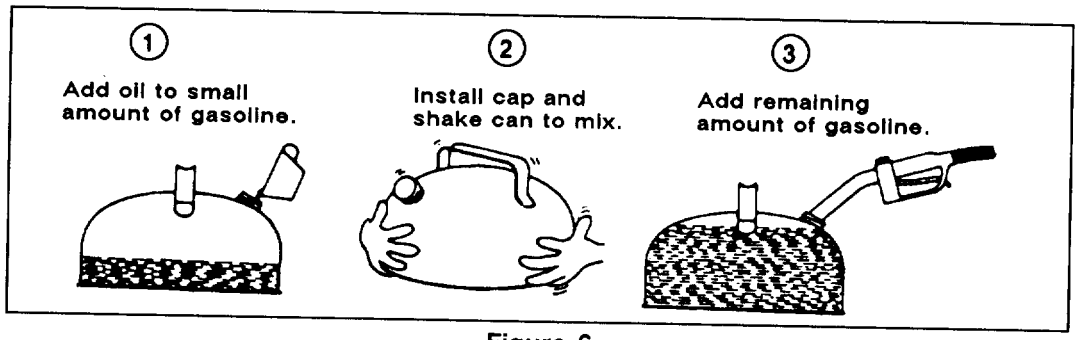

Figure 6

OPERATING INSTRUCTIONS

STARTING/STOPPING ENGINE (Fig. 7)

1. CONTROLS—Key switch, primer, recoil starter, and electric start button are located on the control panel. The choke is just below the control panel.

2. Turn key to ON and pull choke out.

3. Cover hole in center of primer with thumb and push once. An additional prime may be necessary in extremely cold temperatures.

Note: Choke and primer are usually not necessary when starting a warm engine.

4. ELECTRIC STARTING—Connect extension cord to snowthrower and standard household power outlet. Push starter button.

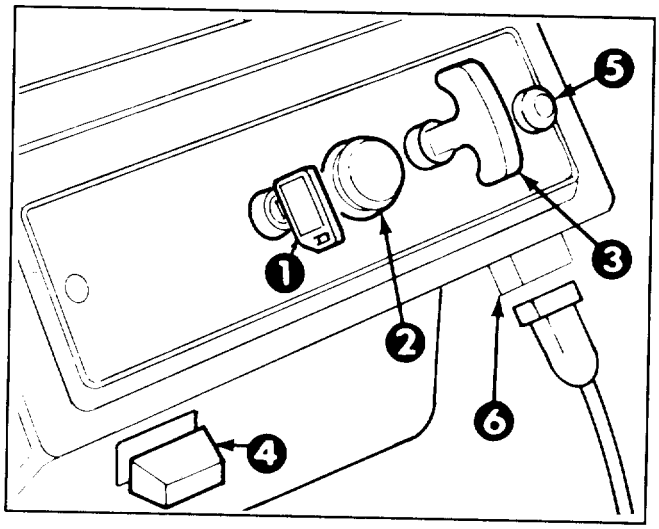

Figure 7

1. Key switch
2. Primer
3. Recoil start
4. Choke
5. Elec. start button*
6. Cord connection*

*ELEC. START MODEL

OPERATING INSTRUCTIONS

IMPORTANT: Excessive running of the electric starter could damage the starter due to overheating. To prevent possible damage, do not run electric starter more than 10 times at intervals of 5 seconds ON, 5 seconds OFF. Then wait more than 40 minutes to allow starter to cool before continuing to run starter. Before repeating engine starting procedure, check that ignition key switch is ON, and make sure there is fresh fuel in fuel tank. If engine continues to fail to start, servicing may be needed.

5. RECOIL STARTING—Hold snowthrower with one hand and pull recoil starter vigorously with other hand.

6. When engine starts, push in choke slowly.

7. TO ENGAGE ROTOR—Squeeze control bar to handle. When the control bar handle is released, the rotor blades stop, but the engine continues to run.

8. TO STOP ENGINE—Release control bar to stop rotor, turn key to OFF, and wait for all moving parts to stop before leaving operator's position.

OPERATING TIPS (Fig. 8)

1. ADJUSTING DISCHARGE CHUTE—Rotate chute crank clockwise to move discharge chute to the right and counterclockwise to move chute to the left. The chute deflector handle on top of the discharge chute controls the height of the snow stream. Do not overtighten the chute deflector mounting nuts so excessive force is required to adjust the deflector.

2. SELF PROPELLING ACTION—The snowthrower clears down to the ground and propels itself forward when rotor blades strike the ground. However, depth and height of snow will affect forward speed. Always overlap each swath and discharge downwind when possible.

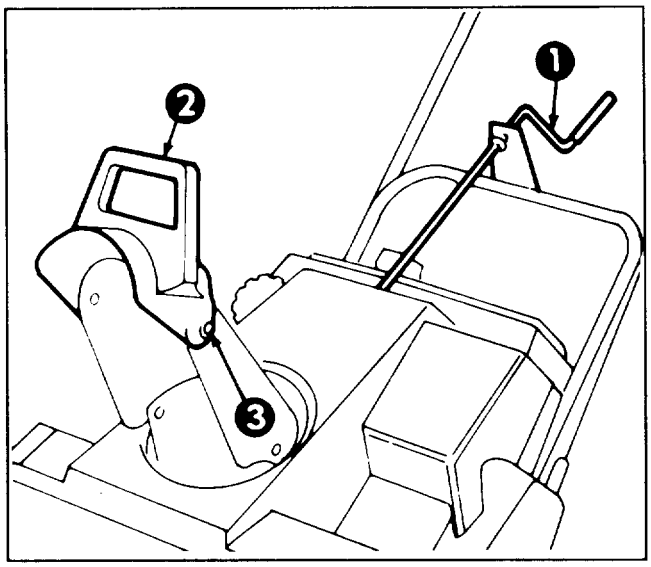

Figure 8

1. **Chute crank**
2. **Chute deflector handle**
3. **Deflector mounting nuts**

3. Keep the area to be cleared free of stones, toys, or other foreign objects which may be picked up and thrown by the rotor blades. Such items could be covered by snowfall and, therefore, unnoticed until struck by the rotor blades. Always be sure to keep children and pets away from area of operation.

4. Should you find it necessary to clear snow from crushed rock or gravel, push down on handle to raise rotor blades clear of loose material that could be thrown by the blades.

5. In some snow and cold weather conditions, some controls and moving parts may freeze solid. Therefore, when any control becomes hard to operate, stop the engine. Check all parts for excessive freeze up. **DO NOT USE EXCESSIVE FORCE WHEN TRYING TO OPERATE FROZEN CONTROLS.** Free all controls and moving parts before operating.

6. AFTER CLEARING SNOW—Let engine run for a few minutes so ice does not freeze moving parts solid. After engine is shut off, wipe ice and snow off entire unit. Operate chute crank several times to clear mechanism of snow.

IMPORTANT: STORE SNOWTHROWER IN OPERATING POSITION ON ITS WHEELS. TIPPING OR STORING UNIT FORWARD ONTO FRONT HOUSING MAY CAUSE HARD STARTING.

MAINTENANCE

GENERAL MAINTENANCE

Normally, the only maintenance required is cleaning the unit and tightening nuts, bolts, and screws. However, the scraper, drive belt, rotor blades, and spark plug should be checked once a year.

ADJUSTING CONTROL BAR (Fig. 9-10)

Periodically check control bar for proper adjustment.

1. Turn ignition key to OFF.

2. CHECK ADJUSTMENT (Fig. 9)—Move control bar back toward handle until slack in cable is removed. Gap between control bar bracket and handle should be approximately 1/16"-1/8". If cable is too loose or too tight, proceed to step 3 for adjustment procedure.

Note: The control cable must always have slack in it when in the disengaged position.

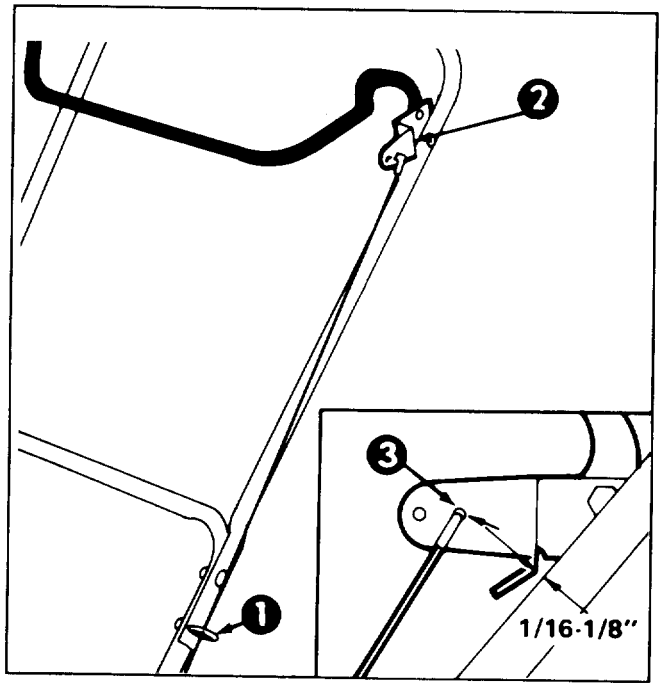

Figure 9

1. Eyebolt 2. Control bar bracket 3. Rear hole

3. ADJUST CABLE—Unhook upper cable end from hole in control bar bracket (Fig. 9). Slide spring cover up cable to expose cable adjuster (Fig. 10). Unhook lower cable end from adjuster. Reposition cable end in a higher or lower hole on adjuster to obtain a gap of 1/16"-1/8" between control bar bracket and handle. (Positioning cable end in a lower hole decreases gap; positioning cable end in a higher hole increases gap.) Reinstall upper cable end into rear hole in control bar bracket (hole with arrow) (Fig. 9). Slide spring cover over cable adjuster and recheck adjustment. Repeat procedure until the proper gap of 1/16"-1/8" between control bar bracket and handle is obtained.

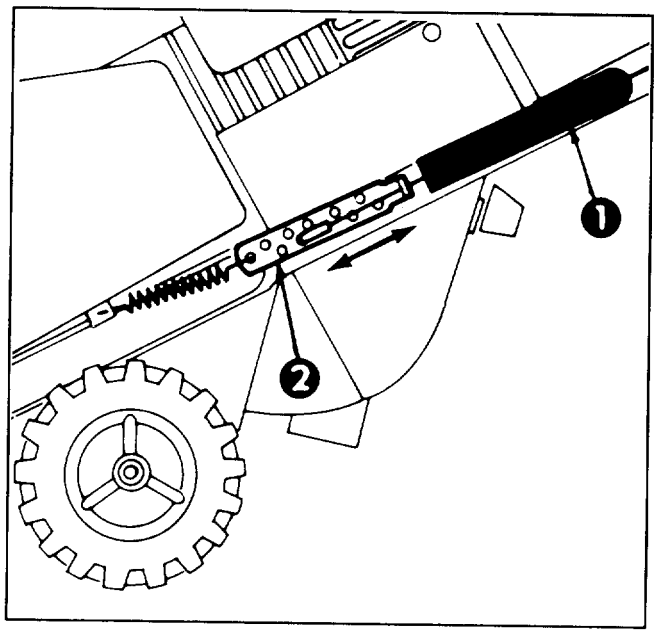

Figure 10

1. Spring cover 2. Cable adjuster

4. After extended use the drive belt may wear and proper belt tension may not be maintained. Improper belt tension causes belt slippage and decreases the snowthrower's performance under a heavy load. Belt slippage may occur after 2-3 seasons of normal usage (10-15 hours). If drive belt slips (continuous squealing noise) under heavy load, increase belt tension by repositioning spring end into forward hole in control bar bracket. Readjust cable (steps 2-3 above).

IMPORTANT: Unnecessary use of forward adjusting hole in control bar bracket reduces drive belt life. Occasional belt slippage (squealing) may occur in extremely wet conditions due to moisture in drive system. To remove moisture, start rotor and operate under no load for 30 seconds. Once moisture is removed, belt should not slip.

DRAINING GASOLINE

1. Stop engine. Remove key from switch.

2. Remove cap from fuel tank and use a pump type syphon to drain fuel into a clean gas can.

Note: This is the only procedure recommended for draining fuel.

REPLACING SCRAPER (Fig. 11-12)

Before each season, inspect scraper for wear. If thickness of bottom of scraper is less than 1/16" (1.6 mm), replace scraper (Fig. 11).

1. Turn ignition key to OFF.

2. Drain gasoline from fuel tank; refer to Draining Gasoline, page 8.

3. Tip snowthrower up onto its nose.

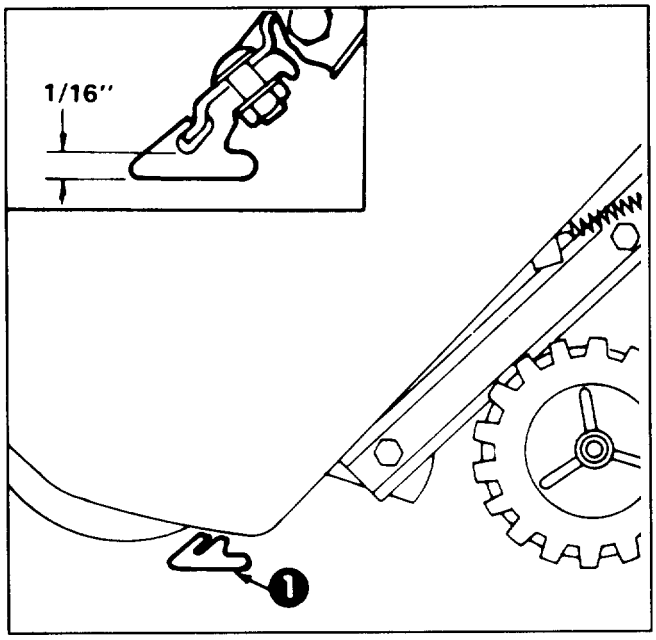

Figure 11

1. Scraper

4. Remove (3) carriage bolts and locknuts holding scraper in place (Fig. 12). Remove scraper by sliding it to right and down.

5. Install new scraper to housing with carriage bolts and nuts.

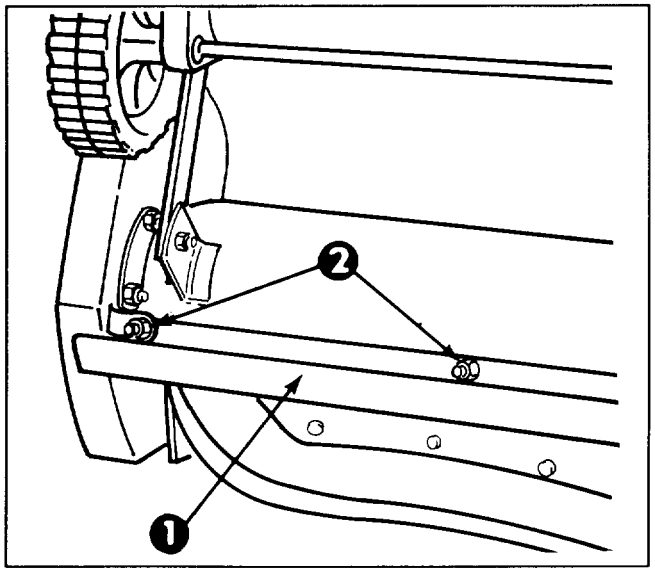

Figure 12

1. Scraper
2. Carriage bolts & locknuts

REPLACING DRIVE BELT (Fig. 13-14)

Inspect drive belt before each season. If ribs on inside of belt are damaged or belt is worn, replacement is necessary.

1. Turn ignition key to OFF.

2. Remove (3) self tapping screws, (2) capscrews, (1) washer and (2) nuts securing belt cover to snowthrower frame (Fig. 13). Set belt cover aside.

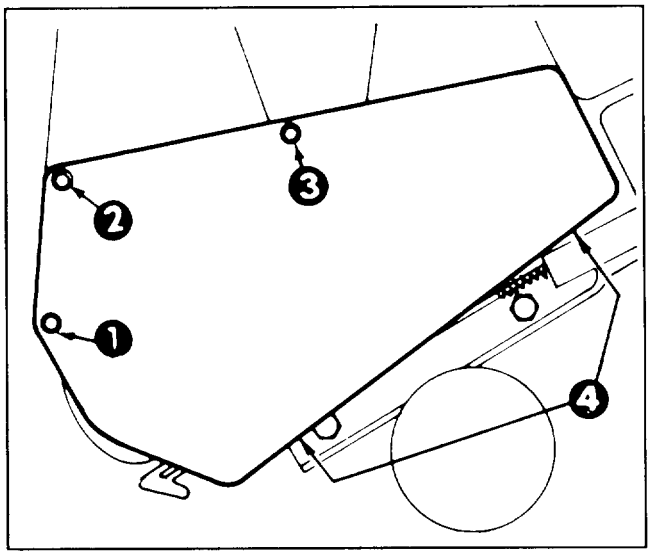

Figure 13

1. Cap screw, nut
2. Capscrew, nut, washer
3. Long self tapping screw
4. Short self tapping screws

3. REMOVING BELT (Fig. 14)—Push down on idler pulley allowing belt to be removed from rotor pulley, brake arm assembly, and engine pulley.

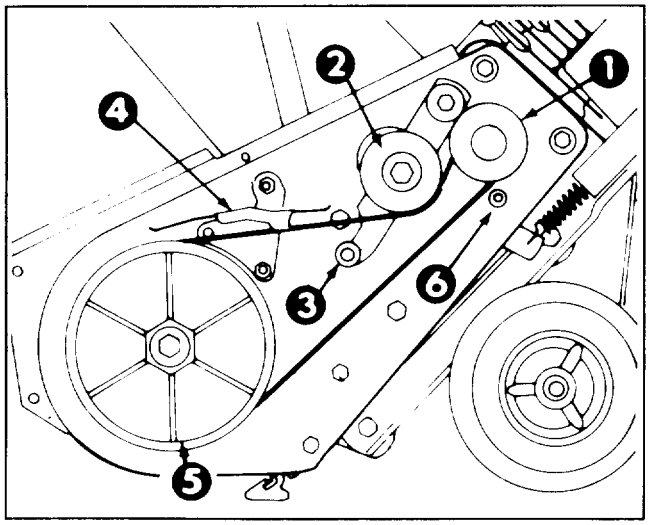

Figure 14

1. Engine pulley
2. Idler pulley
3. Roller
4. Brake arm assembly
5. Rotor pulley
6. Belt guide

4. INSTALLING BELT (Fig. 14)—Loop belt around engine pulley, under idler pulley, over roller, through brake assembly, and around rotor pulley.

Important: Belt must be on top of roller as shown.

5. Reinstall belt cover. Tighten fasteners securely, but DO NOT OVERTIGHTEN.

MAINTENANCE

REPLACING SPARK PLUG (Fig. 15-17)

Before each snow season, check the spark plug. If electrodes in center of plug are dark or have deteriorated, install a new plug. Use an NGK BPMR4A spark plug and set gap at .032" (.81 mm).

1. REMOVE CONTROL PANEL (Fig. 15)—Remove (3) capscrews securing control panel to housing. Remove ignition key and lift off panel, allowing it to hang on recoil rope.

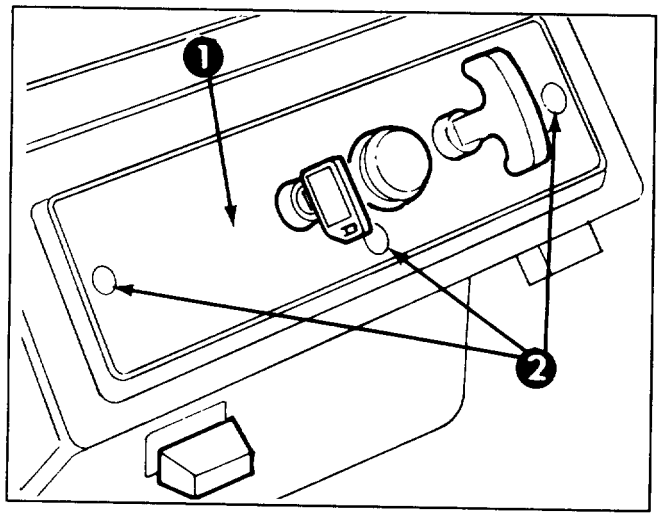

Figure 15

1. Control panel 2. Mounting screws

2. REMOVE SPARK PLUG (Fig. 16)—Pull wire off spark plug and remove plug. Examine the plug and replace if cracked, fouled, or dirty. **DO NOT SANDBLAST, SCRAPE, OR CLEAN SPARK PLUG BECAUSE DIRT MAY RELEASE AND FALL INTO CYLINDER CAUSING ENGINE DAMAGE.**

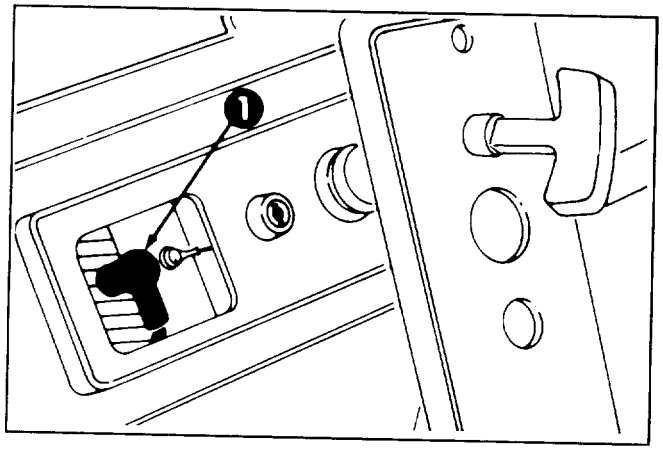

Figure 16

1. Spark plug wire

3. INSTALL SPARK PLUG—Set air gap (Fig. 17) between electrodes at .032" (.81 mm). Install plug and tighten to 15 ft-lb (20.4 N·m). If torque wrench is not used, tighten plug firmly. Push wire onto spark plug and reinstall control panel with (3) capscrews.

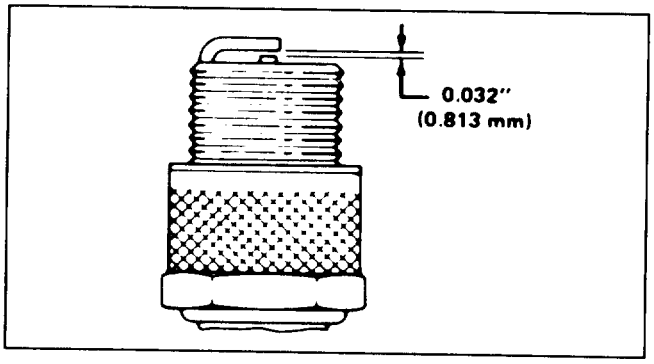

Figure 17

ADJUSTING CARBURETOR

The carburetor has been factory set, and no adjustment is required. However, when operating snowthrower at altitudes of 5000 feet above sea level or higher, carburetor jets may have to be changed. Contact your local Authorized Toro Service Dealer for assistance.

REPLACING ROTOR BLADES (Fig. 18-19)

Before each snow season, inspect rotor blades for wear. From the front (concave) side of the blade, in the center, measure distance from the end of the rotor blade to the steel plate. See Figure 18 for measuring location. If distance is less than 1-9/16" (39.7 mm), blades must be replaced to assure proper performance and prevent damage to underside of snowthrower.

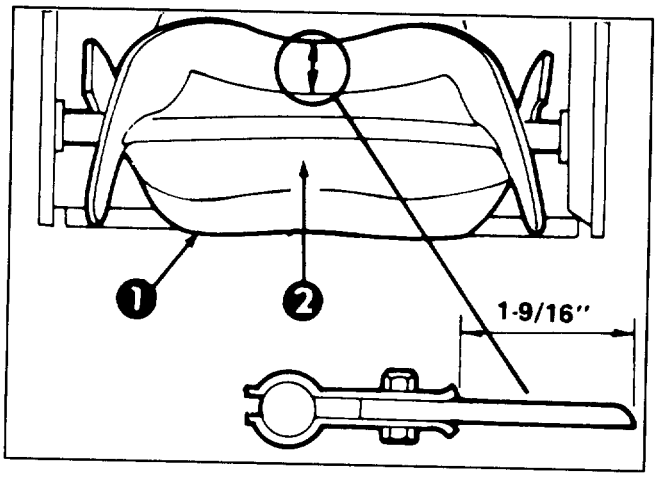

Figure 18

1. Rotor blade 2. Steel plate

Note: Whenever rotor blades are replaced, scraper should also be replaced to assure proper snowthrower operation and performance.

1. REMOVING BLADE (Fig. 19)—Remove (8) 7/16" bolts, (4) washers, and (8) locknuts securing blade to rotor shaft assembly.

MAINTENANCE

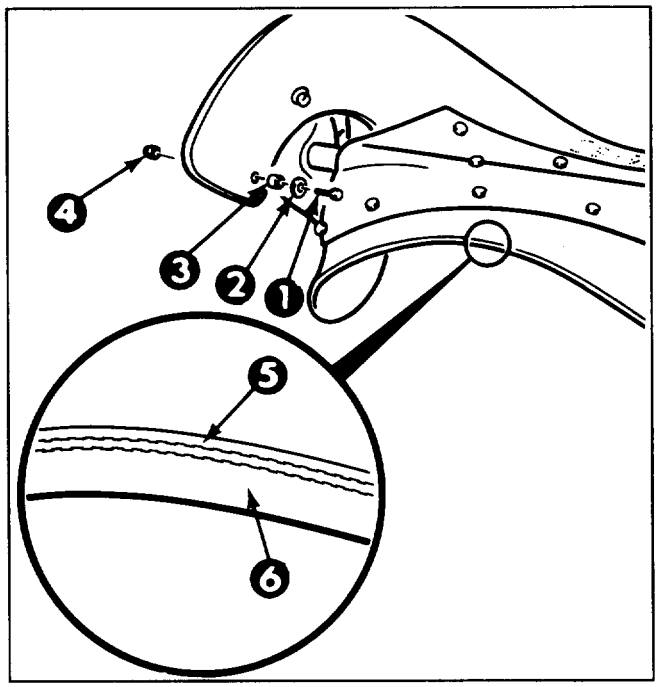

Figure 19

1. Bolt
2. Washer
3. Bushing
4. Locknut
5. Thin side
6. Thick side

2. Slide the blade out from between the steel plates and push the (8) bushings out of the blade holes (Fig. 19).

3. INSTALLING NEW BLADE—The rotor blades are made of laminated rubber. Examine the edge of a blade to see the difference in layer thicknesses (Fig. 19). (Some blades have a part number on the thick side of the blade.)

Both blades must be installed with the thick side facing down. If one blade is installed with the thicker layer facing up and the other blade installed with the thicker layer facing down, the blades will be unbalanced, causing the snowthrower to "hop" or "bounce."

4. Press the (8) bushings into the holes in the new blade.

5. Insert the new blade between the steel plates. Secure it to the steel plates with (4) 7/16" bolts and (4) locknuts. Position bolt heads on thick (bottom) side of blade. Curve the blade, and secure it with the remaining (4) bolts, washers, and locknuts (position bolt heads and washers on thick side of blade). Tighten all bolts.

STORING SNOWTHROWER

1. For long term storage, either drain gasoline from fuel tank or add a fuel stabilizer to the gasoline. To drain gasoline, refer to Draining Gasoline, page 8. After fuel is drained, start engine and let it idle until all fuel is consumed and engine stops. Repeat the starting procedure two more times to assure all gas is removed from the engine. If gasoline is not drained, gum-like varnish deposits will form and cause poor engine operation, even starting problems.

Fuel can be left in gas tank only if a fuel additive, such as Toro's Stabilizer/Conditioner, is added to gasoline and run through engine before storing. Toro's Stabilizer/Conditioner is a petroleum distillate based conditioner/stabilizer. Toro does not recommend stabilizers with an alcohol base, such as ethanol, methanol or isopropyl. Use fuel additive in recommended quantities as specified on container.

Under normal conditions, all fuel additives remain effective in fuel for 6-8 months.

2. CYLINDER/PISTON CARE—Slowly pull recoil starter until resistance is felt due to compression pressure, then stop. Release starter tension slowly to prevent engine from reversing due to compression pressure. This position closes both the intake and exhaust ports which prevents corrosion of the cylinder bore.

3. TIGHTEN FASTENERS AND CLEAN—Tighten screws, bolts, and nuts if necessary. Repair or replace damaged parts. Clean unit thoroughly.

4. STORE SNOWTHROWER—Cover snowthrower and store in a clean, dry place. **NEVER STORE SNOWTHROWER IN THE HOUSE OR BASEMENT.**

TORO SERVICE SUPPORT

If help—concerning safety, set-up, operation, maintenance, or troubleshooting—is ever needed, contact the local Authorized TORO Service Dealer or Distributor. Refer to the "Yellow Pages" for assistance. In addition to skilled service technicians, the dealer and distributor have factory approved accessories and replacement parts. Keep your TORO all TORO. Buy genuine TORO replacement parts and accessories.

PRODUCT IDENTIFICATION

A model and a serial number decal is located on the rear cross member, above the axle. Always refer to specific numbers on the decal in correspondence or when replacement parts are needed.

It is Toro's policy to design and produce high quality products. To ensure customer satisfaction, Toro has extensive warranty coverage on its products. Your TORO GTS Engine powered product has two warranty statements covering it. The Toro Promise is our standard warranty statement and is printed on the last page of this manual.

In addition to The Toro Promise, we are so confident that the TORO GTS Engine will provide a high level of performance and durability that we are providing a *Starting Guarantee!* Please read the details of this additional warranty coverage printed below.

THE TORO STARTING GUARANTEE

A Five Year Limited Warranty
On All Toro GTS Engines

What Is Covered?

The Toro Company guarantees that your TORO GTS Engine will start on the first or second pull for five years from the date of purchase—if you provide the routine maintenance it requires—or we will fix it. The cost of parts and labor are included, but you must pay transportation costs. This covers TORO GTS rotary mower engines purchased after September 1, 1988, and TORO GTS snow engines (Models 38180 and 38185) purchased after August 31, 1989.

What Must You Do To Keep The Warranty In Effect?

You must maintain your TORO GTS Engine by following the maintenance schedule detailed in the operator's manual, at your expense. You must record this work in the maintenance chart provided in your owner's manual and keep your proof of purchase.

How Do You Get Service?

If the starting performance of your TORO GTS Engine should diminish to the point where it will not start in one or two pulls by a normal, able-bodied adult, you should follow the procedures below:

1. Contact any Authorized TORO Service Dealer, TORO Master Service Dealer, or TORO Distributor (the Yellow Pages of your telephone directory is a good reference source).
2. He will either instruct you to return the product to him or recommend another Authorized TORO Service outlet which might be more convenient.
3. Bring the product, your maintenance records, and proof of purchase to the Service Dealer.

If, for any reason, you are dissatisfied with the Dealer's analysis of your engine's starting condition, or the assistance provided, please feel free to contact us:

TORO Customer Service Department
8111 Lyndale Avenue South
Minneapolis, Minnesota 55420

What Does This Warranty Not Cover?

This Warranty does not cover:

1. Any repairs on products used commercially.

2. Normal maintenance including replacement of spark plugs, air filter, fuel filter, and carburetor adjustments.

3. Oil change and lubrication.

4. Repairs or adjustments due to:

   a. Failure to follow proper maintenance procedures;

   b. Rotary mower blade striking an object;

   c. Contaminants in the fuel system;

   d. Improper fuel or fuel mixture (consult your owner's manual if in doubt);

   e. Failure to follow the proper storage procedures as specified in the Operator's Manual;

   f. Operation misuse, neglect or accidents;

   g. Repairs or attempted repairs by anyone other than an Authorized TORO Service Dealer.

5. Special operational conditions where starting may require more than two pulls, including:

   a. First time starts after extended period of non-use or seasonal storage;

   b. Cool temperature starts such as those found in early spring and late fall may require an additional pull or two (applies to rotary products only);

   c. Improper starting procedures. If you are having difficulty starting your unit, please check the operator's manual to ensure you are using the correct starting procedures. This can save an unnecessary visit to a Service Dealer.

All warranty repairs reimbursable under this warranty must be performed by an Authorized TORO Service Dealer using Toro approved replacement parts.

The above remedy through repair by an Authorized TORO Service Dealer is the purchaser's sole remedy.

How Does State Law Relate To This Warranty?

There is no other express warranty except for The Toro Promise. All implied warranties of merchantability (that the product is fit for ordinary use) and fitness for use (that the product is fit for a particular purpose) are limited to the duration of the express warranty.

Some states do not allow limitation on how long implied warranties last, so the above exclusion may not apply to you.

The Toro Company is not liable for indirect, incidental or consequential damages in connection with the use of the product, including any cost or expense of providing substitute equipment or service during periods of malfunction or non-use.

Some states do not allow exclusions of incidental or consequential damages, so the above exclusion may not apply to you.

This warranty gives you specific legal rights, and you may also have other rights which vary from state to state.

GUARANTEED TO START MAINTENANCE RECORD

To keep the starting guarantee in effect, you must perform the following maintenance after every 25 operating hours, more often in dusty and dirty conditions. Follow the procedures in this Operator's Manual and record information on this chart.

Date	Hours Used	Service Air Cleaner	Change Oil Doesn't apply to 2-Cycle	Lubricate Wheels	Check Spark Plug	Mower Storage

TORO Consumer Products

THE TORO TOTAL COVERAGE GUARANTEE

A Full Two-Year Warranty
(Limited Warranty for Commercial Use)

What Is Covered By This Express Warranty?

The Toro Company promises to repair any TORO Product used for residential purposes if defective in materials or workmanship for a period of two years from the date of purchase. The cost of parts and labor are included, but the customer pays the transportation costs.

Transportation within a 15 mile radius of the servicing dealer is covered under this warranty for two-stage snowthrowers, walk behind debris equipment and all TORO Wheel Horse riding products. Walk power mowers, single stage snowthrowers, and other products not specifically covered, are excluded from the transportation coverage provided by this warranty.

What Products Are Covered By This Warranty?

This warranty applies to all gasoline powered Consumer Products (including TORO Wheel Horse riding products). Wide area walk behind mowers, ProLine 118, and 21" Commercial mowers without blade stop controls are covered by separate warranty statements.

How About Commercial Use?

TORO Consumer Products used for commercial, institutional or rental use are covered by a limited warranty for the following time periods from the date of purchase:

Products	Warranty Period
• 300 through 700 Series Tractors (except 612-Z) and 1600 HMR	
Chassis	1 year limited warranty
Engine	2 year limited warranty
• 21" Commercial Duty Walk Mower with blade stop controls	1 year limited warranty
• 200 Series Tractors, Rear Engine Riders, 612-Z, 1200 HMR 3.0 and 3.5 HP Edgers Straight Shaft Trimmers, and Backpack Blowers	90 day limited warranty
• All Others	45 day limited warranty

How Do You Get Warranty Service?

Should you feel your TORO product contains a defect in material or workmanship, contact the dealer who sold you the product or any Authorized TORO Service Dealer or TORO Master Service Dealer. The Yellow Pages of your telephone directory is a good reference source. The dealer will either arrange service at his/her dealership or recommend another Authorized Service Dealer who may be more convenient. You may need proof of purchase (copy of registration card, sales receipt, etc.) for warranty validation.

If for any reason you are dissatisfied with the Service Dealer's analysis of the defect in materials or workmanship or if you need a referral to a TORO Service Dealer, please feel free to contact us at the following address:

Toro Customer Service Department
8111 Lyndale Avenue South
Minneapolis, MN 55420
612-888-8801

What Must You Do To Keep The Warranty In Effect?

You must maintain your TORO Product by following the maintenance procedures described in the operator's manual. Such routine maintenance, whether performed by a dealer or by you, is at your expense.

What Does This Warranty Not Cover? and How Does Your State Law Relate To This Warranty?

There is no other express warranty except the TORO Starting Guarantee on GTS Engines. This express warranty does not cover:

- Cost of regular maintenance service or parts, such as filters, fuel, lubricants, tune-up parts, blade sharpening, brake and clutch adjustments.

- Any product or part which has been altered or misused or required replacement or repair due to normal wear, accidents, or lack of proper maintenance.

- Repairs necessary due to improper fuel, contaminants in the fuel system, or failure to properly prepare the fuel system prior to any period of non-use over three months.

- Pickup and delivery charges for distances beyond a 15 mile radius from an Authorized TORO Service Dealer (covered products only).

All repairs covered by this warranty must be performed by an Authorized TORO Service Dealer using Toro approved replacement parts.

Repair by an Authorized TORO Service Dealer is your sole remedy under this warranty.

The Toro Company is not liable for indirect, incidental or consequential damages in connection with the use of the TORO Products covered by this warranty, including any cost or expense of providing substitute equipment or service during reasonable periods of malfunction or non-use pending completion of repairs under this warranty. Some states do not allow exclusions of incidental or consequential damages, so the above exclusion may not apply to you.

This warranty gives you specific legal rights, and you may also have other rights which vary from state to state.


TORO®