FORM NO. 3314-130

TORO®

MODEL NO: 30505 - 00001 & UP

INSTALLATION INSTRUCTIONS

15 CU. FT. HOPPER KIT

GROUNDSMASTER® 220-D or 224

IMPORTANT: On Model 30794, GM 220-D or Model 30224, GM 224 traction units with serial numbers prior to 10001, the steering cylinder rod end must be checked to assure it has a grease groove. If rod end does not have a grease groove, a new rod end must be installed.

IMPORTANT: On Model 30794, GM 220-D or Model 30224, GM 224 traction units with serial numbers prior to 90001, a rear axle upgrade is required. Contact your TORO Distributor for upgrade requirements.

SAFETY INSTRUCTIONS

BEFORE OPERATING

1. Read and understand the contents of this manual before starting and operating the machine. Become familiar with all controls and know how to stop quickly. A free replacement manual is available by sending complete Model and Serial Numbers to:

The Toro Company
8111 Lyndale Avenue South
Minneapolis, Minnesota 55420

2. Never allow children to operate the machine. Do not allow adults to operate the machine without proper instruction. Only trained operators, skilled in slope operation and who have read this manual should operate this machine.

3. Never operate machine when under the influence of drugs or alcohol.

4. Remove all debris or other objects that might be picked up and thrown by cutter blades. Keep all bystanders away from the operating area.

5. Keep all shields and safety devices in place. If a shield, safety device, or decal is defective or damaged, repair or replace it before operation is commenced. Also, tighten any loose nuts, bolts, and screws to insure machine is in safe operating condition.

6. Do not wear loose-fitting clothing because it could get caught in moving parts. Always wear long pants and substantial shoes. Wearing safety glasses, safety shoes, and a helmet is advisable and required by some local ordinances and insurance regulations.

7. Be sure interlock switches are adjusted correctly so engine cannot be started unless traction pedal is released—neutral position—and PTO switch is in DISENGAGED position.

8. Fill fuel tank before starting the engine. Avoid spilling any fuel. Since fuel is flammable, handle it carefully.

A. Use an approved fuel container.

B. Do not fill fuel tank when engine is hot or running.

C. Do not smoke while handling fuel.

D. Fill fuel tank outdoors and up to about one inch (25 mm) from the top of the tank, not the filler neck.

E. Wipe up any spilled fuel.

WHILE OPERATING

9. Sit on the seat when starting the engine and operating the machine.

10. Always make sure seat pivot retaining pin is installed.

11. Before starting the engine:

A. Engage parking brake.

B. Make sure traction pedal is in neutral and PTO is in DISENGAGE position.

C. After engine is started, release parking brake and keep foot off traction pedal. Machine must not move. If movement is evident, the neutral return mechanism is adjusted incorrectly. Shut engine off and adjust until machine does not move when traction pedal is released.

12. Do not run the engine in a confined area without adequate ventilation. Exhaust fumes are hazardous and could possibly be deadly.

©The Toro Company — 1990

SAFETY INSTRUCTIONS

13. Maximum seating capacity is one person. Therefore, never carry passengers.

14. Check carefully for overhead clearances before driving under any objects.

15. The grass deflector or complete blower assembly must always be installed on cutting unit.

16. To maintain machine control, 75 lb. of weight must be mounted on left front wheel of traction unit before using the 15 cu. ft. Hopper kit.

17. Operator must be skilled and trained in how to drive on hillsides. Failure to use caution on slopes or hills may cause loss of control and vehicle to tip or roll possibly resulting in personal injury or death.

18. Traverse slopes carefully. Do not start or stop suddenly when traversing slopes or when traveling uphill or downhill.

19. If engine stalls or machine loses headway and cannot make it to the top of a slope, do not turn machine around. Always back slowly straight down the slope.

20. Using the machine demands the operator's complete attention. To prevent loss of control:

A. Operate only in daylight or when there is good artificial light.

B. Drive slowly.

C. Avoid sudden stops and starts.

D. Look behind machine before backing up.

E. Watch for holes or other hidden hazards.

F. Do not drive close to a sand trap, ditch, creek, or hazard.

G. Reduce speed when making sharp turns and when turning on a hillside.

H. The cutting deck must be lowered when going down slopes for steering control.

21. The grass deflector must always be installed and in lowest position on the cutting unit when blower assembly is removed. This product is designed to drive objects into the ground where they lose energy quickly in grassy areas. <u>However, don't take an injury risk!!</u> When a person or pet appears unexpectedly in or near the mowing area, STOP MOWING. Careless operation, combined with terrain angles, ricochets, or improperly positioned guards, can lead to thrown object injuries. Do not resume mowing until area is cleared.

22. Never raise the cutting unit while the blades or other parts are rotating.

23. If cutting blades strike a solid object or the machine vibrates abnormally, disengage PTO, move throttle to SLOW, set parking brake, and shut engine off. Remove key from switch to prevent possibility of accidental starting. Check cutting unit, blower assembly and traction unit for damage and defective parts. Repair any damage before restarting the engine and operating the cutting unit. Assure cutting unit blades are in good condition and blade bolts are torqued to proper specifications (See Cutting Deck Operator's Manual).

24. If the cutting unit discharge area or blower assembly ever plugs, disengage PTO and shut engine off before removing the obstruction.

25. To stop machine, remove foot from traction pedal and use brakes. Gradually reversing the traction pedal can provide additional braking.

26. Do not touch engine, muffler, or radiator while engine is running or soon after it has stopped. These areas could be hot enough to cause a burn.

27. Before raising hopper:

A. Make sure machine is on level ground.

B. Disengage the PTO.

C. Clear bystanders from area around hopper and hopper linkage.

D. Check overhead clearance.

28. Do not attempt to dump clippings over an embankment.

29. Hopper must be fully lowered before driving machine.

30. Lower the cutting unit and hopper to their lowest positions and remove key from switch whenever machine is left unattended.

31. Before getting off the seat:

A. Move traction pedal to neutral position and remove foot from pedal.

B. Set the parking brake and disengage the PTO.

C. Shut the engine off and remove key from ignition switch. Wait for all movement to stop before getting off the seat.

32. Never operate collection system with hopper covers open.

MAINTENANCE

33. Remove key from ignition switch to prevent accidental starting of the engine when servicing, adjusting, or storing the machine.

SAFETY INSTRUCTIONS

34. Stay away from hopper and hopper linkage during operation.

35. Do not walk under hopper or service machine unless hopper is fully raised and empty, with hydraulic lines disconnected at quick couplers or fully lowered.

36. Do not remove any hydraulic line unless hopper is fully lowered or fully raised and empty.

37. If major repairs are ever needed or assistance is desired, contact an Authorized TORO Distributor.

38. To reduce potential fire hazard, keep the engine free of excessive grease, grass, leaves, and accumulations of dirt.

39. ASBESTOS BRAKE LININGS CONTAIN ASBESTOS FIBERS. BREATHING ASBESTOS DUST MAY BE HAZARDOUS TO YOUR HEALTH AND MAY CAUSE SERIOUS RESPIRATORY OR OTHER BODILY HARM. For your protection:

A. Avoid creating dust.

B. Do not remove brake drum without proper equipment.

C. Do not work on brake linings without proper protective equipment.

D. Do not replace brake linings without proper protective equipment.

E. Do not attempt to sand, grind, chisel, file, hammer, or alter brake linings in any manner without proper protective equipment.

F. Follow O.S.H.A. standards for proper protective devices to be used when working with asbestos materials.

40. Make sure machine is in safe operating condition by keeping nuts, bolts, and screws tight. Check all cutting unit blade mounting bolts frequently to assure they are torqued to proper specifications (See Cutting Deck Operator's Manual).

41. Make sure all hydraulic line connectors are tight, and all hydraulic hoses and lines are in good condition before applying pressure to the system.

42. Keep body and hands away from pin hole leaks or nozzles that eject hydraulic fluid under high pressure. Use paper or cardboard, not hands, to search for leaks. Hydraulic fluid escaping under pressure can have sufficient force to penetrate skin and do serious damage. If fluid is ejected into the skin, it must be surgically removed within a few hours by a doctor familiar with this form of injury or gangrene may result.

43. Before disconnecting or performing any work on the hydraulic system, all pressure in system must be relieved by stopping engine and lowering implement to the ground.

44. If the engine must be running to perform maintenance or an adjustment, keep clear of PTO shaft, cutting unit blades, and other moving parts.

45. At the time of manufacture, the machine conformed to safety standards in effect for riding mowers. To ensure optimum performance and continued safety certification of the machine, use genuine TORO replacement parts and accessories. Replacement parts and accessories made by other manufacturers may result in non-conformance with the safety standards, and the warranty may be voided.

SAFETY AND INSTRUCTION DECALS

The following safety and instruction decals are mounted on the machine. If any decal becomes damaged or illegible, install a new decal. Part numbers are listed below or in your parts catalog.

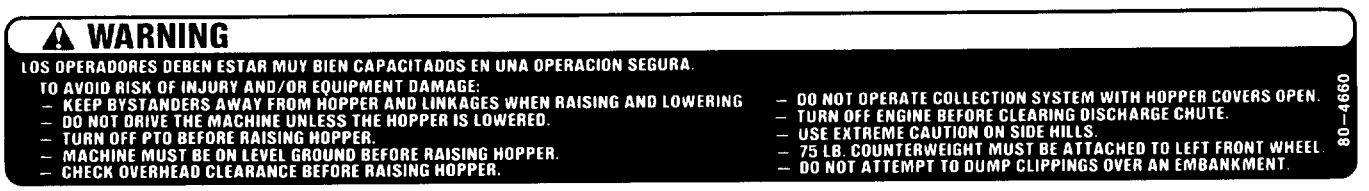

INSTALL ON LEFT SIDE OF SEAT FRAME
(Part No. 80-4660)

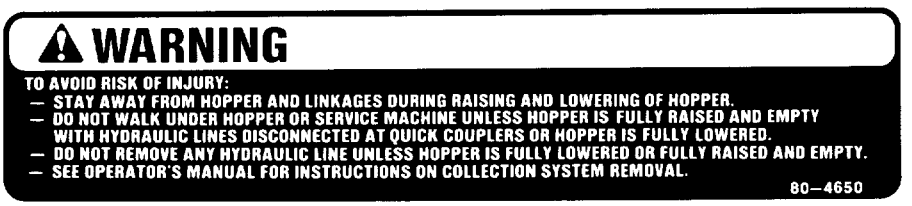

ON REAR OF FRAME
(Part No. 80-4650)

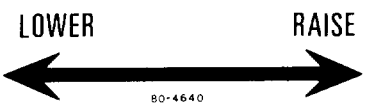

INSTALL ON RIGHT SIDE
OF SEAT FRAME
(Part No. 80-4640)

LOOSE PARTS

Note: Use this chart as a checklist to ensure all parts necessary for assembly have been shipped. If any of these parts are missing, total set-up cannot be completed.

DESCRIPTION	QTY.	USE
Control Valve Assembly	1	Mount Control Valve To Fender
Control Valve Handle	1	
Control Valve Pivot Lever	1	
Roll Pin	1	
Clevis Pin	1	
Cotter Pin	1	
Tube Assembly	1	
Tube Assembly	1	
Capscrew 1/4 - 20 x 2-3/4" lg.	3	
Flange Locknut 1/4 -20	3	
Clamp	2	
Capscrew 1/4 -20 x 1-1/4" lg.	1	
Flatwasher - 1/4	2	
Locknut 1/4 -20	1	
Frame Assembly	1	Install Frame Assembly
Hopper Mounting Bracket - Left	1	
Capscrew 5/16 - 18 x 1-1/4" lg.	4	
Locknut 5/16 -18	4	
Hopper Mounting Bracket - Right	1	
Coupler Bracket	1	
Capscrew 3/8 - 16 x 1" lg.	4	
Lockwasher - 3/8	2	
Locknut 3/8 - 16	2	
Hopper Mounting Bracket - Rear	1	
Strap	2	
Capscrew 1/2 - 13 x 1-1/4" lg.	2	
Capscrew 1/2 - 13 x 1-1/2" lg.	2	
Flatwasher - 1/2	2	
Locknut 1/2 -13	4	
Disconnect Pin	1	
Welded Mounting Pin - Long	1	
Welded Mounting Pin - Short	1	
Self Tapping Screw 1/4 -20- x 3/4" lg.	2	
Hydraulic Hoses	2	Connect Hydraulic Lines
Protective Sleeve	1	
Retaining Ring	1	
Retaining Ring	1	
Dust Plug	1	
Dust Cap	1	
Quick Disconnect (nipple & coupler)	1	
Hopper Assembly	1	Install Hopper Assembly
Welded Mounting Pin	2	
Hair Pin Cotter - for 1/2" Shaft	2	
Hair Pin Cotter - for 1/4" Shaft	2	
Carriage Bolt - 5/16 - 18 x 1" lg.	2	
Flange Locknut - 5/16 -18	2	
Shield - Top	1	Install in Chute Opening of Hopper
Shield - Wide	1	
Shield - Narrow	1	
Flat - Short	1	
Flat - Long	2	
Screw - #10 - 24 x 1" lg.	8	
Flange Nut - #10 - 24	8	
Decal - Warning	1	Mount on Seat Frame
Decal - Valve Operation	1	Mount on Seat Frame
Wheel Weight	1	Mount to left Wheel
Threaded Rod	2	
Lockwasher	4	
Flatwasher	2	
Hex Nut	6	
Included in wheel weight kit		
Installation Instructions	1	
Parts Catalog	1	

SET-UP INSTRUCTIONS

MOUNT CONTROL VALVE

1. Place a drain pan under lift valve (Fig. 1) on right side of machine.

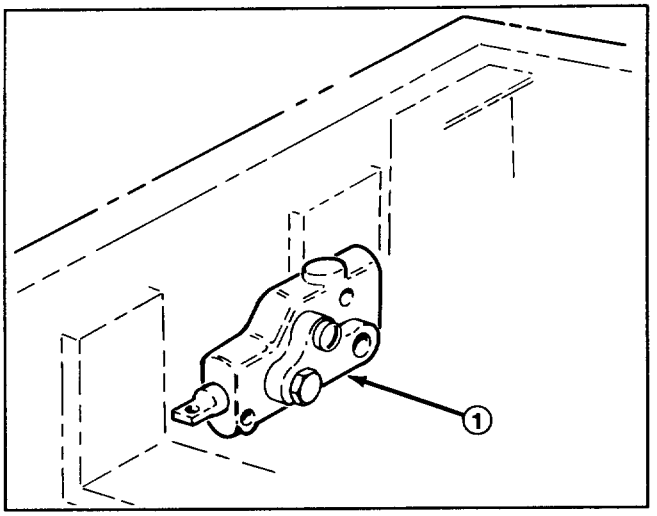

Figure 1
1. Lift Valve

2. Disconnect return line (Fig. 1), from bottom of lift valve (line goes to radiator).

3. Mount left control valve tube assembly to fitting on lift valve.

4. Mount right control valve tube assembly to return line disconnected from lift valve.

5. Loosely mount appropriate tube assemblies to fittings on right and left sides of valve, positioning them as shown in figure 1.

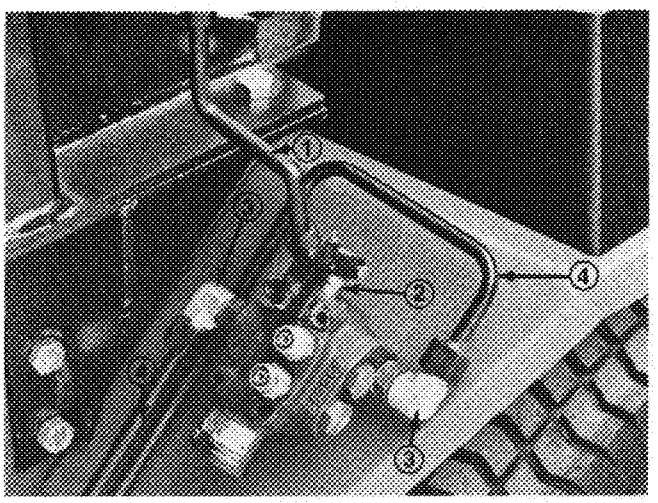

Figure 2
1. Control Valve Handle
2. Valve Spool
3. Fittings
4. Tube Assembly

6. With valve positioned on right fender, use it as a template to locate, mark and drill (3) 17/64" dia. holes in right fender (Fig. 2). Tube assembly must be at least 1-3/4" from frame.

7. Secure valve assembly and pivot lever to fender with (3) 1/4 - 20 x 2-3/4" lg. capscrews and 1/4 -20 flange locknuts (Fig. 2). Tighten tube assemblies to valve.

8. Remove drain pan from under machine.

9. Mount control valve handle to valve spool with a clevis pin and cotter pin. Mount pivot lever to handle with a roll pin (Fig. 2).

10. Secure tube assemblies together with clamp, 1/4 - 20 x 1-1/4" lg. capscrew, (2) 1/4 flat washers and 1/4 - 20 locknut. Position clamp near edge of fender (Fig. 3).

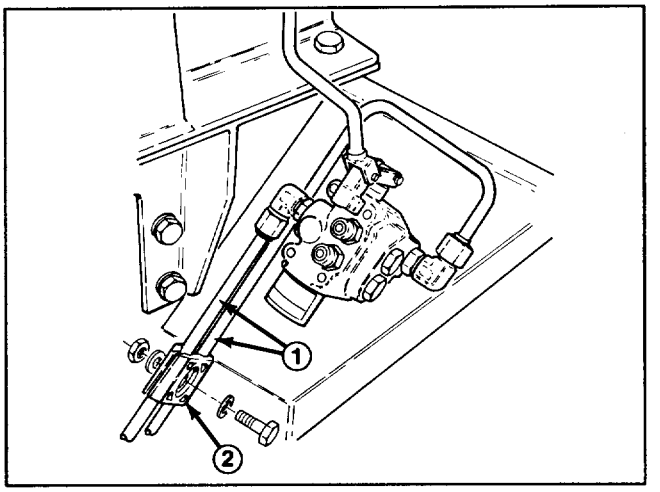

Figure 3

1. Tube Assemblies
2. Clamp and Fasteners

11. Connect hydraulic hose assemblies to fittings on front of control valve (Fig. 4). Make sure o-rings are in position. Install protective sleeve over hoses. Remainder of installation will be completed after hopper frame is installed.

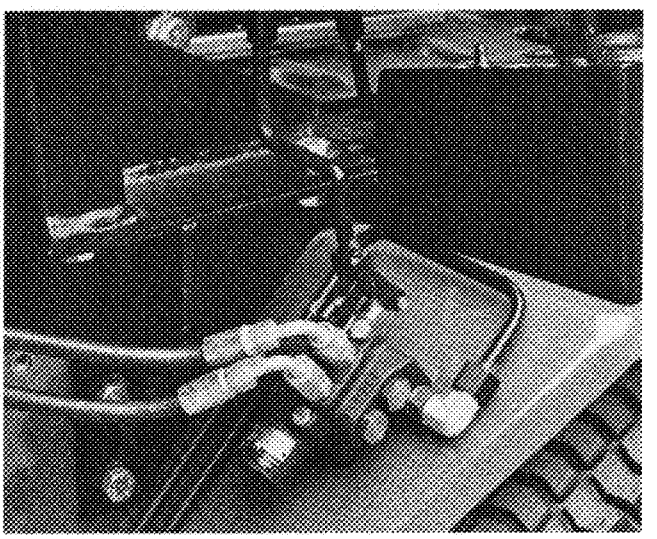

Figure 4

SET-UP INSTRUCTIONS

MOUNT HOPPER FRAME

1. Disconnect air cleaner hose from air cleaner body (Fig. 5).

2. Loosen bands securing air cleaner body to mounting brackets (Fig. 5).

3. Remove (4) screws securing air cleaner mounting brackets to left side of frame (Fig. 5). Remove air cleaner brackets. Discard fasteners.

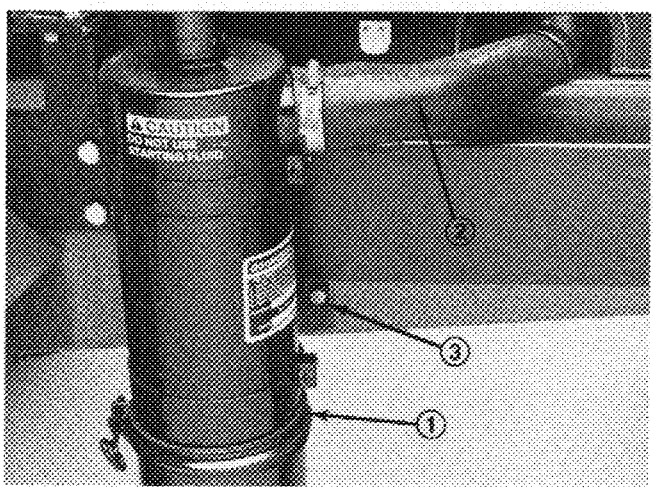

Figure 5
1. Air Cleaner
2. Hose
3. Mounting Bracket

4. Using same mounting holes, secure left hopper mounting bracket and air cleaner mounting brackets to frame using (4) 5/16 - 18 x 1-1/4" capscrews and locknuts as shown in fig. 6.

5. Reinstall air cleaner body and tighten bands securing air cleaner body to mounting brackets.

6. Reconnect air cleaner hose to air cleaner body.

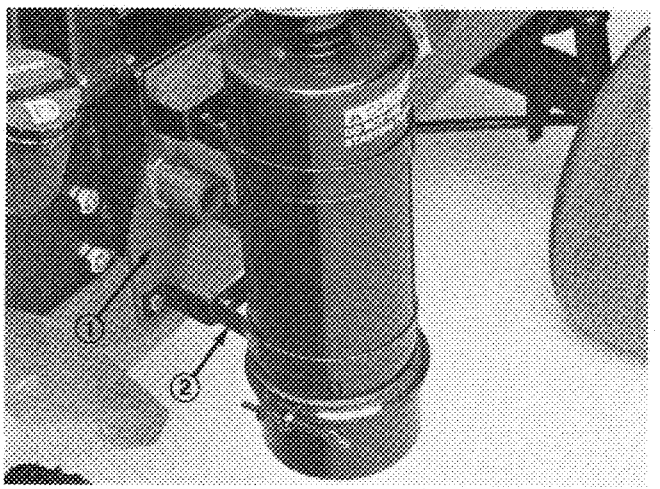

Figure 6
1. Left Hopper Mounting Bracket
2. Air Cleaner Assembly

7. Secure top of right hopper mounting bracket and coupler bracket to right side of machine using (2) 3/8 - 16 x 1" lg. capscrews and 3/8 lockwashers. Secure bottom of bracket to frame with (2) 3/8 - 16 x 1" lg. capscrews and locknuts (Fig. 7).

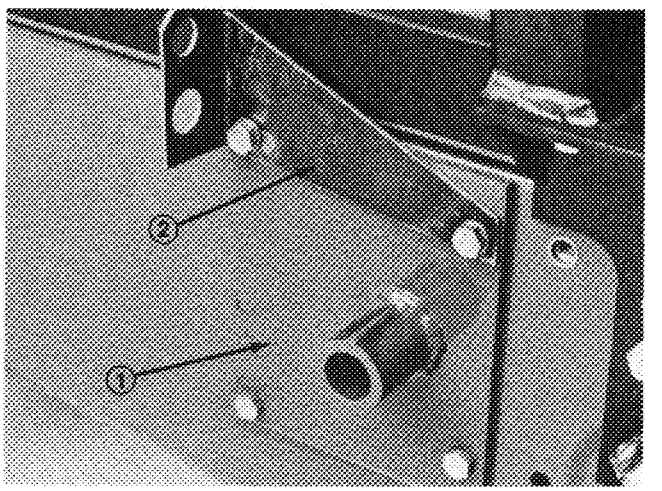

Figure 7
1. Right Hopper Mounting Bracket
2. Coupler Bracket

8. Position rear hopper bracket on rear frame, as shown in figure 8, aligning (2) bottom mounting holes with holes in frame. Using bracket as a guide, locate, mark and drill the remaining (2) 9/16" dia. holes in rear frame.

9. Mount top of rear hopper bracket to frame using (2) 1/2 -13 x 1-1/4" lg. capscrews, mounting strap and (2) 1/2 - 13 locknuts (Fig. 8). Strap to be positioned between frame and locknuts.

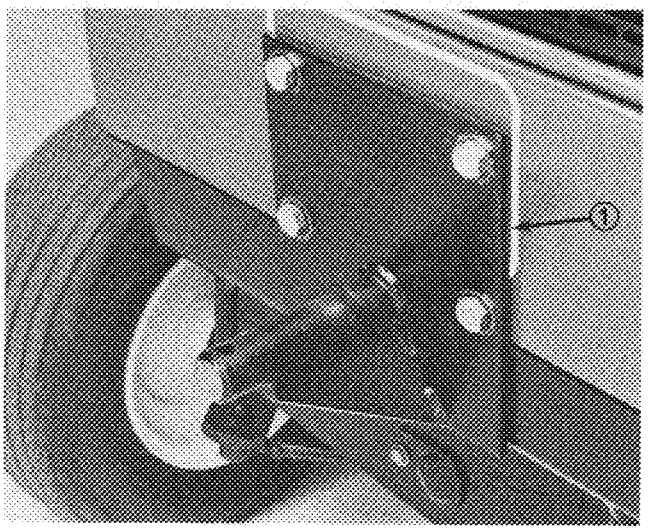

Figure 8
1. Rear Hopper Mounting Bracket
2. Strap (Behind Frame)

SET-UP INSTRUCTIONS

10. Mount bottom of bracket to frame with (2) 1/2 -13 x 1-1/2" lg. capscrews, mounting strap, 1/2 flatwashers and locknuts. Strap to be positioned between frame and washers.

11. From rear of machine, slide front of hopper frame onto side mounting bracket pins and rear of frame over rear bracket pin.

12. Secure rear of frame to bracket pin with disconnect pin (Fig. 9).



Figure 9
1. Disconnect Pin

13. Install short and long welded mounting pins through arm assembly and main lift arm assembly. Secure with 1/4 - 20 x 3/4" lg. self tapping screws.

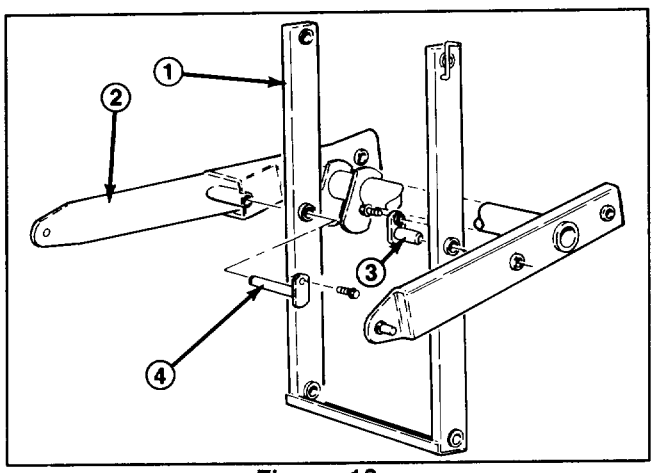

Figure 10
1. Arm Assembly
2. Main Lift Arm Assembly
3. Short Pin (on left side)
4. Long Pin (on right side)

CONNECT HYDRAULIC HOSES

1. Slide loop end of dust plug over end of hydraulic hose from bottom valve fitting. Insert female coupler thru bottom hole in coupler bracket and secure with retaining ring.

2. Secure hose assembly to female coupler (Fig. 11).

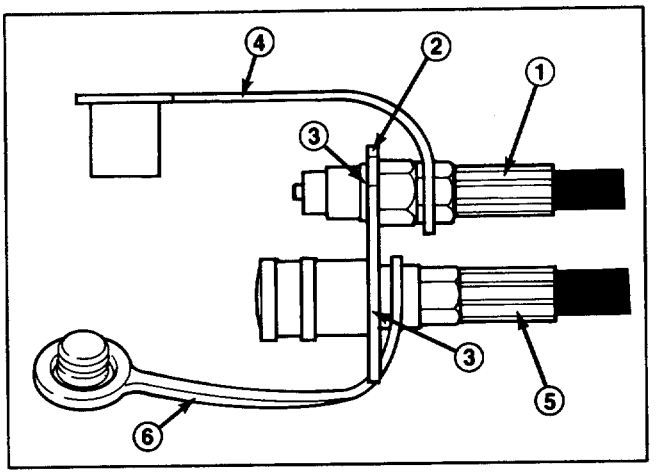

Figure 11
1. Top Hydraulic Hose
2. Coupler Bracket
3. Retaining Ring
4. Dust Cap
5. Bottom Hydraulic Hose
6. Dust Plug

3. Slide loop end of dust cap (Fig. 11) over end of hydraulic hose coming from top valve fitting. Install male nipple to hose end.

4. Insert end of hose thru top hole in coupler bracket (Fig. 11). Secure hose assembly to bracket with retaining ring.

5. Connect appropriate hydraulic hose from hopper assembly to hoses installed to coupler bracket.

MOUNT HOPPER ASSEMBLY

1. Remove tie straps securing tie rods to hopper arms. Install (2) 5/16 - 18 x 1" lg. carriage bolts and flange nuts in hopper arm holes where tie straps previously were.

2. Slide hopper assembly (hopper cover to rear) into side frame aligning mounting holes in hopper with holes in frame (Fig. 12).

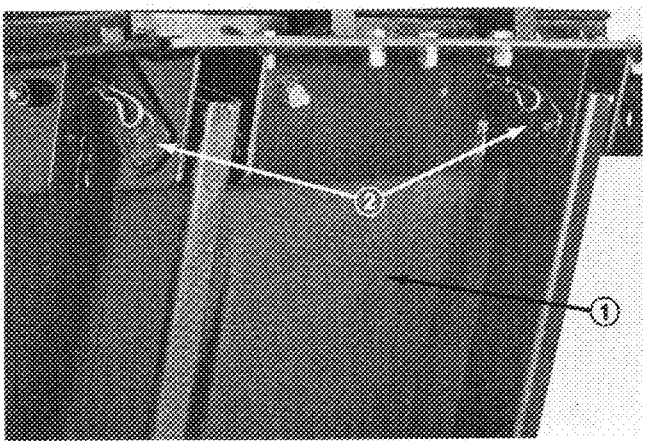

Figure 12
1. Hopper Assembly
2. Mounting Pins

SET-UP INSTRUCTIONS

3. Secure hopper to frame with (2) welded mounting pins and hair pin cotters (Fig.12).

4. Secure hopper tie rods to frame with hair pin cotters (Fig. 13).

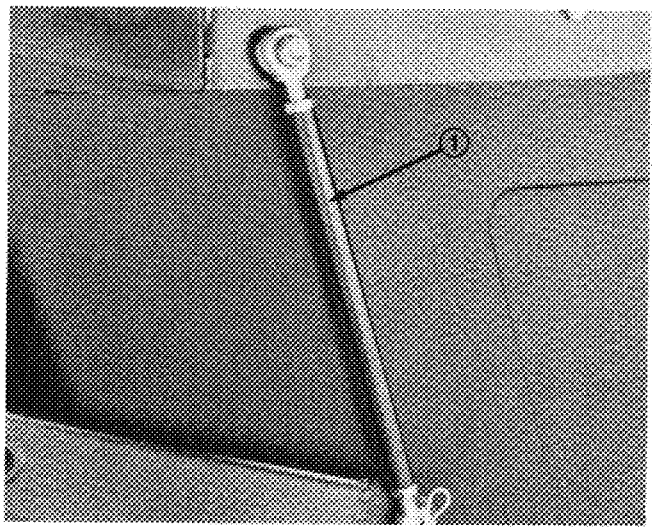

Figure 13
1. Hopper Tie Rod

5. Adjust tie rods up or down to make sure hopper is level with machine and it does not contact machine during operation.

INSTALL FRONT BLOWOUT SHIELDS

Note: The following instructions are as viewed from the front of the machine.

When hopper is used with a 52" Deck

1. Secure wide shield to left inside lip of hopper opening with a long flat, (3) #10 - 24 X 1" lg. screws and #10 - 24 flange nuts (Fig. 14).

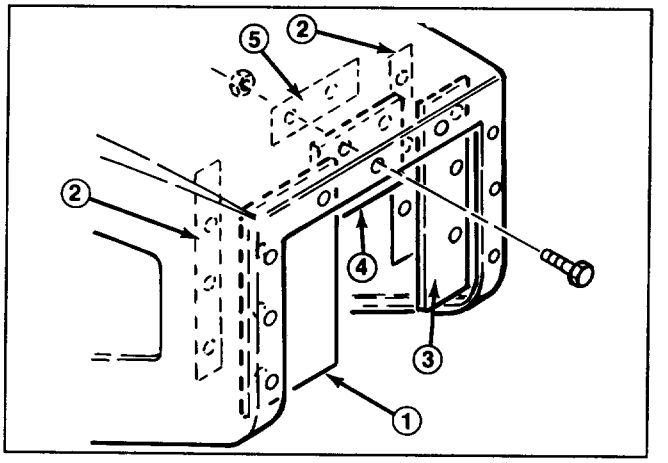

Figure 14
1. Wide Shield
2. Long Flat
3. Narrow Shield
4. Top Shield
5. Short Flat

2. Secure narrow shield to right inside lip of hopper opening with a long flat, (3) #10 - 24 X 1" lg. screws and #10 - 24 flange nuts (Fig. 14).

3. Secure top shield to upper inside lip of hopper opening with a short flat, (2) #10 - 24 X 1" lg. screws and #10 - 24 flange nuts (Fig. 14). Use (2) mounting holes on right side of opening only.

When hopper is used with a 62" Deck

1. Secure wide shield to right inside lip of hopper opening with a long flat, (3) #10 - 24 X 1" lg. screws and #10 - 24 flange nuts (Fig. 15).

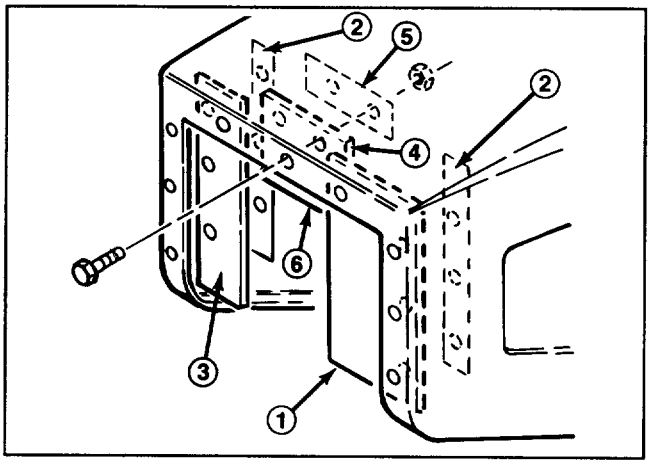

Figure 15
1. Wide Shield
2. Long Flat
3. Narrow Shield
4. Top Shield
5. Short Flat
6. Cut off 1-1/2"

2. Secure narrow shield to left inside lip of hopper opening with a long flat, (3) #10 - 24 X 1" lg. screws and #10 - 24 flange nuts (Fig. 15).

3. Cut 1-1/2" of material off bottom edge of top shield. Secure top shield to upper inside lip of hopper opening with a short flat, (2) #10 - 24 X 1" lg. screws and #10 - 24 flange nuts (Fig. 15). Use (2) mounting holes on left side of opening only.

INSTALL DECALS

Install valve operation decal to right side of seat frame and caution decal to left side of seat frame.

MOUNT WHEEL WEIGHT

1. Measure depth of wheel rim. This is achieved by measuring the distance from hole to outside edge of rim.

2. Add 3-7/8" to measurement attained. This becomes dimension "A" in figure 16.

3. Thread a hex nut onto each threaded rod to "A" dimension.

4. Insert threaded rods through 2 opposite holes in rim and secure in place with 1/2" lockwashers and hex nuts (Fig. 16).

SET-UP INSTRUCTIONS

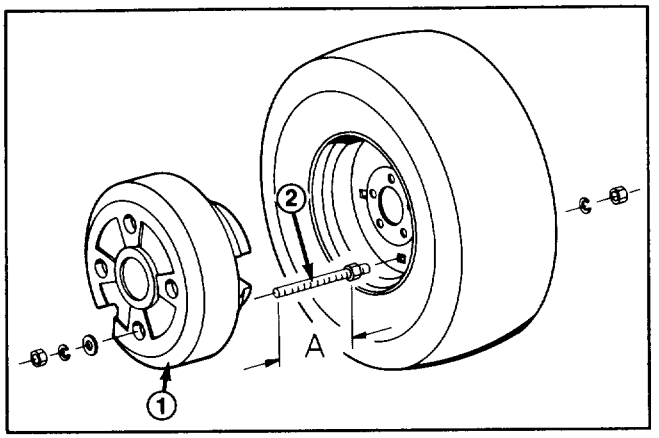

Figure 16
1. Wheel Weight
2. Threaded Rod

5. Place wheel weight over ends of threaded rods and secure in place with flatwashers, lockwashers and hex nuts (Fig. 16). Do not overtighten hex nuts or damage to the plastic housing of the weight may occur.

Note: If there is excess thread protruding from nuts or inside of wheel, cut it off with a hacksaw. Threaded rod must not contact any parts of the machine when wheel is rotating.

BEFORE OPERATING HOPPER

1. Start engine. Raise and lower hopper several times. (move control valve lever forward to lower hopper and in reverse direction to raise hopper)

2. Stop engine. Check for hydraulic leaks. Check hydraulic fluid level in front axle and replenish as necessary. (Refer to Traction Unit Operator's Manual for specifications).

OPERATING INSTRUCTIONS

HOPPER OPERATION (When used with a 52" or 62" Blower Kit)

1. Move control valve lever forward to lower hopper and in reverse direction to raise hopper.

OPERATING CHARACTERISTICS

CAUTION

When grass collector is removed, NEVER operate without deflector in place.

For best performance, regulate traction pedal to keep engine rpm high and somewhat constant. A good rule to follow is: decrease ground speed as the load on the cutting blade increases; and increase ground speed as the load on the blade decreases. This allows the engine, working with the transmission, to sense the proper ground speed while maintaining high blade tip speed necessary for good quality-of-cut, vacuuming action, and to throw grass into hopper. If blower speed drops too low, plugging may result. Refer to Cutting Unit and Traction Unit Operator's Manual for operation of each.

CAUTION

Use care to avoid collision between hopper and any stationary objects. Always trim with left side of cutting unit.

1. Inflate all tires on traction unit to 18–20 psi.

2. This grass collector is designed for use in wet or dry conditions. Do not collect extremely long grass as the hopper will fill too quickly.

3. When collecting wet, heavy grass, some clippings may not be thrown completely through the chute. The hole in the bottom of the chute allows these clippings to drop out without plugging the chute. When this happens, reduce ground speed.

4. The bumper which protects the blower housing doesn't extend far enough to eliminate the chance of the hopper or hopper frame striking a stationary object. Stay far enough away from obstructions to avoid collisions. Trim with left side of cutting unit only.

DANGER

Never place hands or feet in chute, blower, or cutting unit.

5. While operating, check frequently for excessive clippings left on turf or uncut grass.If those conditions occur, the blower or cutting unit may be plugged. Stop unit, disengage PTO, set brake and shut off ignition. Check for obstructions in the chute, blower or cutting unit. Clear any obstruction using a stick or similar tool. Check blower belt tension. If slipping, readjust.

OPERATING INSTRUCTIONS

6. The grass collector hopper is designed to exhaust air beside the chute. This allows the hopper to fill completely without decreasing performance. Grass will fall through the opening in the front of the hopper when hopper is full. Immediately disengage the power take off and empty the hopper.

7. Cut grass often, especially when turf growth is rapid. If shorter turf is desired, cut the grass again. Overlap the swaths to produce an even cutting pattern.

IMPORTANT: When transporting, hopper must be in down position with rear cover latched over large cover.

HOPPER REMOVAL

1. Stop unit, disengage PTO, set brake and shut off ignition.

2. Move hopper control valve lever forward and reverse a few times to release pressure in hydraulic system.

3. Disconnect hydraulic line quick couplers.

4. Remove (2) hair pin cotters securing tie rods to frame.

5. Remove (2) welded mounting pins and hair pin cotters securing hopper to frame. Remove hopper from frame.

Note: Hopper frame is heavy. Support frame when removing or have a helper assist you.

6. Remove disconnect pin securing rear of frame to machine. Slide frame off machine.

7. To prevent contamination of hydraulic lines, connect hopper lines together.

8. Insert dust caps over hydraulic fittings on machine.

BLOWER REMOVAL

1. Shut engine off, disengage and latch idler, unlatch and open belt cover and lift belt off spindle pulley. Close cover. Remove (2) knobs securing blower to mounting brackets and remove blower, belt and chute.

2. Reverse procedure to reinstall blower assembly.

CAUTION

When blower is removed, NEVER operate without deflector in place.

MAINTENANCE

ADJUSTING REAR COVER LATCH

Adjust latch assembly (Fig. 17) up or down if cover does not seal properly or if cover does not latch when operating.

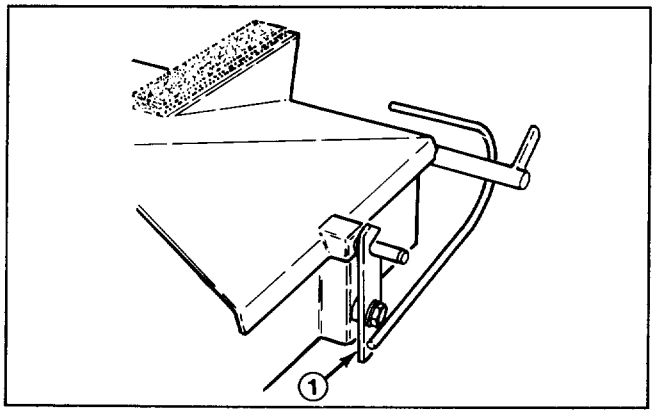

Figure 17

1. Latch Assembly

CAUTION

Never work on hopper unless it is in the fully lowered position.

GENERAL PRACTICES

1. Keep unit clean, checking that engine is free of dirt and chaff. Make sure all fasteners are tight. Check deflectors, baffles and shields for wear and replace as needed.

2. Clean grass clippings from hopper, chute, blower and cutting unit after each use. Wash underside of cutting unit daily with hose. An excessive buildup of clippings will impair collection system performance.

3. Refer to Cutting Unit and Traction Unit Operator's Manuals for service requirements of each.

MAINTENANCE

LUBRICATION

After every 25 hours of operation grease cylinder and pivot points with No. 2 multi-purpose lithium base grease. There are (8) grease fittings at various pivot points and (1) fitting on each end of cylinder (Fig. 18).

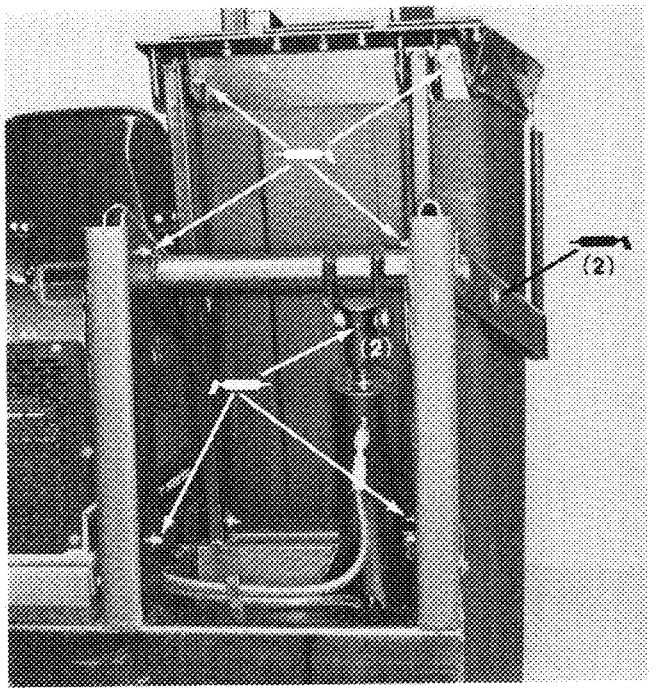

Figure 18

The Toro Promise

A ONE YEAR LIMITED WARRANTY ON COMMERCIAL PRODUCTS OTHER THAN TRIMMERS AND BLOWERS.

The Toro Company promises to repair your TORO Product if defective in materials or workmanship. The following time periods from the date of purchase apply:

Commercial Products . . . . . 1 Year

The costs of parts and labor are included, but the customer pays the transportation costs on walk rotary mowers, trimmers and blowers.

If you feel your TORO product is defective and wish to rely on The Toro Promise, the following procedure is recommended:

1. Contact your Authorized TORO Distributor or Commercial Dealer (the Yellow Pages of your telephone directory is a good reference source).
2. The TORO Distributor or Commercial Dealer will advise you on the arrangements that can be made to inspect and repair your product.
3. The TORO Distributor or Commercial Dealer will inspect the product and advise you whether the product is defective and, if so, make all repairs necessary to correct the defect without an extra charge to you.

If for any reason you are dissatisfied with the distributor's analysis of the defect or the service performed, you may contact us.

Write:

TORO Commercial Products Service Department
8111 Lyndale Avenue South
Minneapolis, Minnesota 55420

The above remedy of product defects through repair by an Authorized TORO Distributor or Commercial Dealer is the purchaser's sole remedy for any defect.

THERE IS NO OTHER EXPRESS WARRANTY. ALL IMPLIED WARRANTIES OF MERCHANTABILITY AND FITNESS FOR USE ARE LIMITED TO THE DURATION OF THE EXPRESS WARRANTY.

Some states do not allow limitations on how long an implied warranty lasts, so the above limitation may not apply to you.

This Warranty applies only to parts or components which are defective and does not cover repairs necessary due to normal wear, misuse, accidents, or lack of proper maintenance. Regular, routine maintenance of the unit to keep it in proper condition is the responsibility of the owner.

All warranty repairs reimbursable under the Toro Promise must be performed by an Authorized TORO Commercial Dealer or Distributor using Toro approved replacement parts.

Repairs or attempted repairs by anyone other than an Authorized TORO Distributor or Commercial Dealer are not reimbursable under the Toro Promise. In addition, these unauthorized repair attempts may result in additional malfunctions, the correction of which is not covered by warranty.

THE TORO COMPANY IS NOT LIABLE FOR INDIRECT, INCIDENTAL OR CONSEQUENTIAL DAMAGES IN CONNECTION WITH THE USE OF THE PRODUCT INCLUDING ANY COST OR EXPENSE OF PROVIDING SUBSTITUTE EQUIPMENT OR SERVICE DURING PERIODS OF MALFUNCTION OR NON-USE.

Some states do not allow the exclusion or limitation of incidental or consequential damages, so the above limitation or exclusion may not apply to you.

This warranty gives you specific legal rights, and you may also have other rights which vary from state to state.

COUNTRIES OTHER THAN THE UNITED STATES OR CANADA

Customers who have purchased TORO products exported from the United States or Canada should contact their TORO Distributor (Dealer) to obtain guarantee policies for your country, province or state. If for any reason you are dissatisfied with your Distributor's service or have difficulty obtaining guarantee information, contact the TORO importer. If all other remedies fail, you may contact us at The Toro Company.

Compliance with Radio Interference Regulations Certified.
Certifie Conforme au Reglement sur le Brouillage Radioelectrique.

Litho in U.S.A.