FORM NO. 3314-159

TORO

MODEL NO. 26682 - 0000001 & UP

OPERATOR'S MANUAL

21" (0.53 M) SP 4-in-1 REAR BAGGER

FINGERTIP START

⚠ SAFETY INSTRUCTIONS

This mower "meets or exceeds CPSC blade safety requirements for walk behind rotary mowers, " and the B71.1-1986 specifications of the American National Standards Institute. However, improper use or maintenance by the operator or owner can result in injury. To reduce the potential for injury, comply with these safety instructions and always pay attention to the safety alert symbol. Failure to comply with the instruction may result in personal injury.

BEFORE OPERATING

1. Read this manual carefully before operating the mower. Become familiar with the controls and proper use of the mower. Never allow children to operate the mower or adults to operate it without proper instructions.

2. Keep everyone, especially children and pets, away from area of operation. Thoroughly inspect area where mower will be used and remove sticks, stones, wire, and debris.

3. Wear long pants and substantial shoes. Do not operate mower while wearing open sandals or when barefoot.

4. Check fuel level before starting engine. Do not fill fuel tank indoors, when the engine is running, or until engine cools for several minutes after running. Wipe up spilled gasoline before starting engine.

5. Keep all guards, shields, and safety devices in place. Repair or replace defective or damaged parts.

6. Traction drive and blade are designed to stop when control bar is released. Assure control and brake function properly before each use of mower.

WHILE OPERATING

7. Do not run engine indoors.

8. Always maintain secure footing. Keep a firm grip on the handle and walk; never run. Never operate mower in wet grass. Mow only in daylight or in good artificial light.

9. Mow across the face of slopes; never up and down. Use extreme caution when changing direction on slopes. Do not mow excessively steep slopes.

10. Always wear safety glasses or eye shields during operation to protect eyes from foreign objects that may be thrown from the machine. Keep face, hands, and feet away from the mower housing and cutter blade when the engine is running. Stay behind the handle until the engine stops and keep clear of discharge opening at all times.

11. When mulching, assure discharge door is closed. When bagging grass, stop engine before the bag is removed and emptied.

12. Shut engine off and wait for all moving parts to stop before unclogging chute.

13. Since the blade rotates for a few seconds after the blade control is released, stay behind the handle until all moving parts stop.

©The Toro Company-1989

⚠ SAFETY INSTRUCTIONS

14. After striking a foreign object or if mower vibrates abnormally, stop engine and remove wire from spark plug. check mower for damage and make all repairs before using mower again.

15. Stop the engine before adjusting the height-of-cut.

16. Stop the blade when crossing a gravel driveway, road, or sidewalk.

17. Stop engine before leaving the operator's position—behind the handle. Disconnect wire from spark plug if mower will be unattended.

18. Do not touch engine while it is running or shortly after it is stopped because engine will be hot enough to cause burn.

MAINTENANCE

19. Perform only those maintenance instructions described in this manual. If major repairs are ever needed or if assistance is desired, contact your local Authorized TORO Service Dealer.

20. Before mower is cleaned, inspected, serviced, or adjusted, stop engine and disconnect high tension wire from spark plug. Keep wire away from plug to prevent accidental starting.

21. To assure the mower is in safe operating condition, frequently check and keep all nuts, bolts, and screws tight. Assure blade nuts are tightened to 25–33 ft-lb.

22. To reduce fire hazard, keep engine free of excessive grease, grass, leaves, and accumulations of dirt.

23. Check grass catcher bag frequently for wear or deterioration. Replace with a new bag for your protection.

24. Allow engine to cool before storing mower in any enclosure. Do not store mower near any open flame or where gasoline fumes may be ignited by a spark.

25. Do not overspeed the engine by changing governor settings.

26. At the time of manufacture, the mower conformed to the safety standards in effect for rotary mowers. To assure optimum performance and continued safety certification of the mower, use genuine TORO replacement parts and accessories. Replacement parts and accessories made by other manufacturers may result in non-conformance with the safety standards, and that could be dangerous.

⚠ SAFETY DECALS

Safety decals and instructions are easily visible to the operator and are located near any area of potential danger. Replace any decal that is damaged.



ON DISCHARGE DOOR
(Part No. 63-9050)



ON MOWER HOUSING
(Part No. 43-8480)

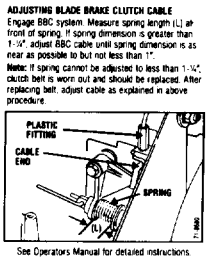

ON UNDERSIDE
OF SCREEN PANEL
(Part No.71-8680

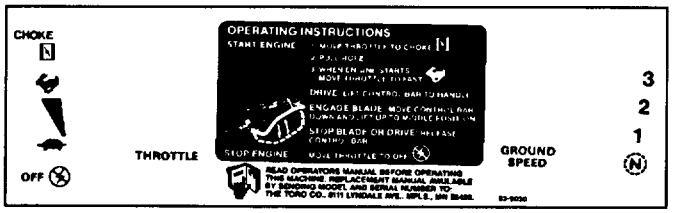

ON CONTROL PANEL
(Part No. 63-9030)

TABLE OF CONTENTS

	Page
Set-Up Instructions	3
Before Operating	4–5
Operating Instructions	5–8
Maintenance	8–13
Servicing Air Cleaner	8–9
Replacing Spark Plug	9
Draining Gasoline	9
Adjusting Wheel Drive	9–10
Inspecting/Removing/Sharpening Blade	10–11
Lubrication	11
Adjusting Blade Brake	11–12
Cleaning Mower Housing	12
Preparing Mower For Storage	12–13
Optional Equipment	13
Product Identification	14
Toro Service Support	14
Maintenance Record	14–15
The Toro Promise	

SET-UP INSTRUCTIONS

INSTALL HANDLE AND BAG

1. Spread handle ends and slide onto mower housing mounting studs (Fig. 1).

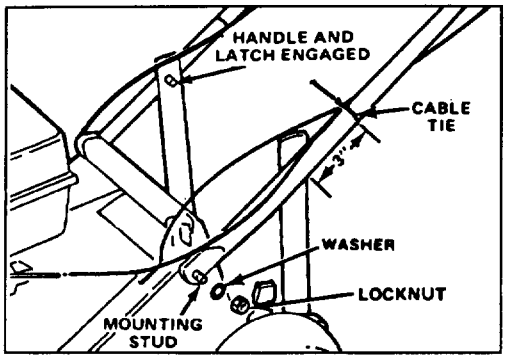

Figure 1

2. Secure each side of handle to mounting studs with a washer and locknut (Fig. 1).
3. Spring handle latches inward. Move handle up or down to snap handle studs into middle hole on both latches (Fig. 1).
4. Handle height may be adjusted to desired position by moving handle studs to one of the other holes in handle latches.
5. Secure control cables to each side of handle approximately 3" above handle stud (Fig. 1).
6. To install grass bag, raise discharge door and hook bag frame onto hinge pins (Fig. 2). Allow bag to rest on mower housing over discharge opening. Close door and make sure it seals around top of bag opening (Fig. 3).

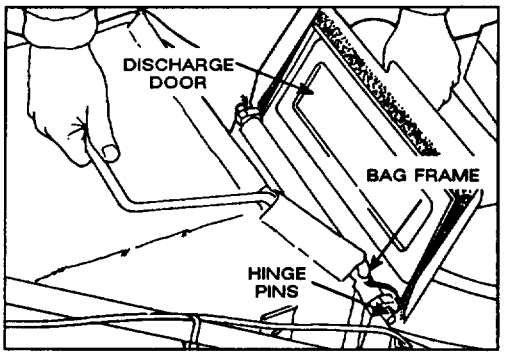

Figure 2

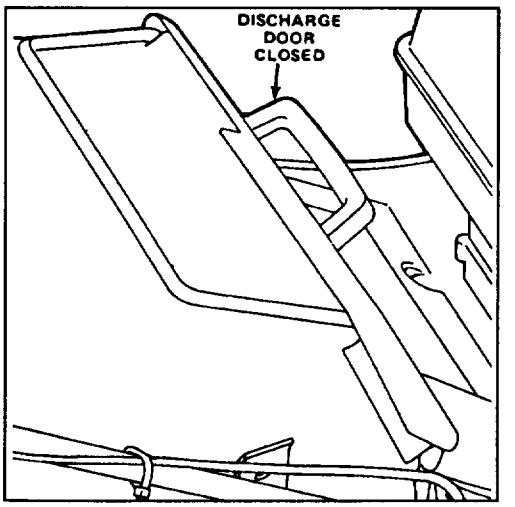

Figure 3

BEFORE OPERATING

WARNING

DANGER: Gasoline is extremely flammable and explosive under certain conditions. Do not smoke when handling fuel and keep fuel far away from open flames and sparks. Never buy more than a 30 day supply of gasoline. Store it in an approved container. Keep gasoline out of reach of children.

Refuel outdoors and only when engine is cold. Do not fill tank full. Fill to 1/4" (6 mm) below the bottom of the filler neck, not into the filler neck. This space if for expansion of fuel. Use funnel or spout to prevent spilling. Wipe up any spilled gas.

MIX GASOLINE AND OIL—50:1 RATIO

1. Approved Mixture—For simplicity and best engine performance, mix the contents of one bottle of Toro 50:1 Two-Cycle Oil with two gallons of fresh unleaded regular gasoline. Leaded regular gasoline may be used if unleaded regular is not available.

Toro Two-Cycle Oil is specially formulated to provide superior lubrication, make starting easy, and prolong engine life. If Toro Two-Cycle Oil is not available, mix two gallons of gasoline and 5.2 ounces of another high grade two-cycle oil that has the NMMA or BIA-TCW certification printed on the label.

IMPORTANT: YOU CAN ALSO USE TORO "EASY MIX" TWO-CYCLE OIL (3.2 OUNCE BOTTLE MIXED ONE PER GALLONS OF GASOLINE 40:1 RATIO) IN THIS TORO TWO-CYCLE ENGINE.

NEVER USE AUTOMOTIVE OIL (i.e. SAE 30, 10 W 30 etc.), TWO-CYCLE OIL THAT IS NOT CERTIFIED NMMA/ BIA-TCW OR THE WRONG MIX RATIO BECAUSE THE ENGINE CAN BE DAMAGED, AND IT WOULD NOT BE COVERED BY THE TORO WARRANTY.

2. Mixing Gasoline and Oil—Pour correct amount of two-cycle oil into an approved gasoline container and ad a half gallon of gasoline. Install cap on gasoline container and shake the container to mix oil thoroughly. Remove cap and add remaining amount of gasoline.

IMPORTANT: NEVER USE METHANOL, GASOLINE CONTAINING METHANOL, GASOHOL CONTAINING MORE THAN 10% ETHANOL, PREMIUM GASOLINE, OR WHITE GAS BECAUSE ENGINE FUEL SYSTEM DAMAGE COULD RESULT.

DO NOT USE FUEL ADDITIVES OTHER THAN THOSE MANUFACTURED FOR FUEL STABILIZATION DURING STORAGE (SUCH AS TORO'S PRESERVIT OR A SIMILAR PRODUCT). ADDITIVES SHOULD NOT BE USED TO TRY TO ENHANCE THE POWER OR PERFORMANCE OF MACHINE.

Note: Do not mix gasoline and oil in the product fuel tank. Oil that is at room temperature mixes easier and more thoroughly than cold oil.

50:1
Fuel Mixing Chart

U.S. GALLON	
Gasoline	**Oil**
1 gallon	2.6 oz.
2 gallons	5.2 oz.

BEFORE OPERATING

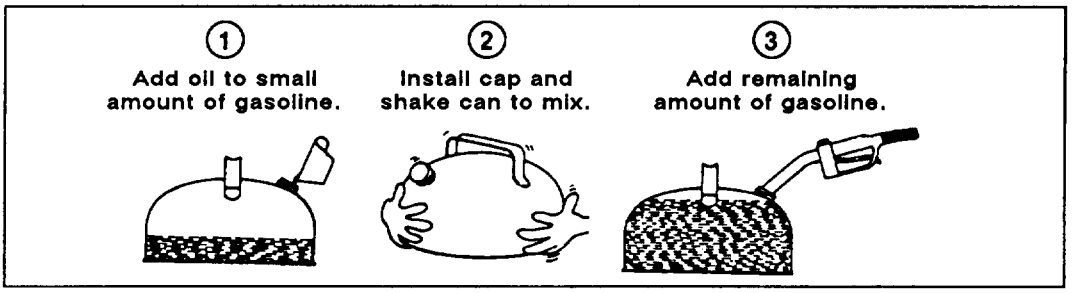

Figure 4

OPERATING INSTRUCTIONS

OPERATING TIPS

1. BEFORE EACH MOWING—Assure blade brake, self-propelled drive, and control bar function properly. When control bar is released, blade and self-propelled drive are designed to stop.

2. CUTTING AND BAGGING—Best results are achieved when engine is running at maximum speed and only about 1/3 of the grass blade is cut. If long grass must be cut, use highest height-of-cut setting for first mowing. Then recut the grass at a more normal setting. If too long of grass is cut, mower may plug and cause engine to stall.

3. MULCHING—In summer, when grass grows slower and is drier, mulch by removing the grass bag and closing the discharge door (Fig. 5).

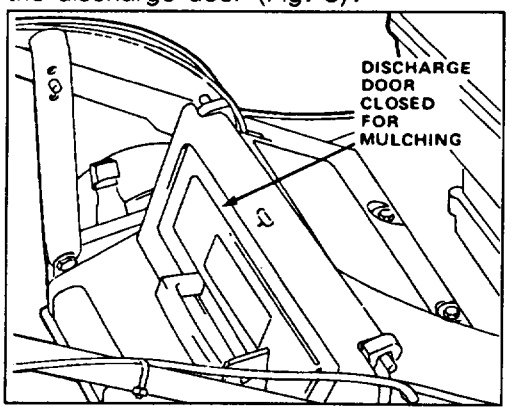

Figure 5

When cutting in dry, dusty conditions move the throttle to a slower speed to reduce the amount of dust generated by mower.

4. SHARP BLADE—Begin each cutting season with a sharp blade. Periodically file down nicks.

STARTING, STOPPING, AND SELF-PROPELLING

1. CONTROLS—Throttle, ground speed control and blade/self-propelled control bar are on upper handle (Fig. 6). Recoil starter is on top of engine.

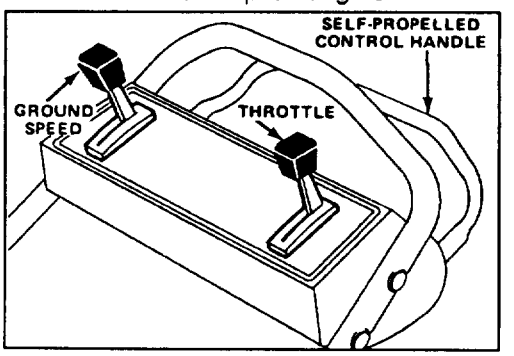

Figure 6

2. Push spark plug wire onto spark plug (Fig. 12).

3. STARTING—Move ground speed control to "N" and throttle to CHOKE (Fig. 5). Cover hole in center of primer with thumb and push once (Fig. 12). Pull fingertip starter and regulate throttle as desired when engine starts.

Note: When starting a warm engine, CHOKE and PRIMER may not be necessary.

OPERATING INSTRUCTIONS

4. BLADE AND TRACTION OPERATION (Fig. 7)—Move control bar down to "A" and raise to engage blade "B". Move ground speed control to desired setting and squeeze control bar against handle "C" to drive. Ground speed varies, depending on space between control bar and handle. To disengage traction drive but keep blade engaged, gradually release control bar to mid position. To self-propel with blade disengaged, simply squeeze control bar against handle, eliminating downward movement necessary for blade engagement.

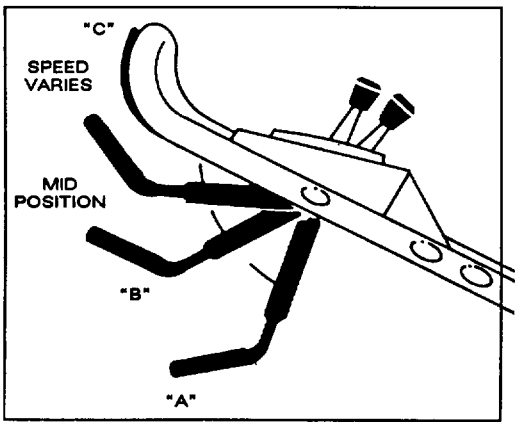

Figure 7

Note: The drive wheels are equipped with freewheeling clutches which enable the mower to be pulled rearward easier when the wheel drive is disengaged. To disengage the clutches, mower must be pushed forward at least 1" after wheel drive operation has stopped.

5. STOPPING (Fig. 6)—Release control bar to stop blade and traction drive. Move ground speed control to "N". To stop engine, move throttle to OFF. Pull wire off spark plug if mower is unattended or not used.

USING GRASS BAG

1. Stop engine and wait for all parts to stop.

2. INSTALLING BAG—Raise discharge door and hook bag frame onto hinge pins (Fig. 8). Allow bag to rest on mower housing over discharge opening. Close door and make sure it seals around top of bag opening.

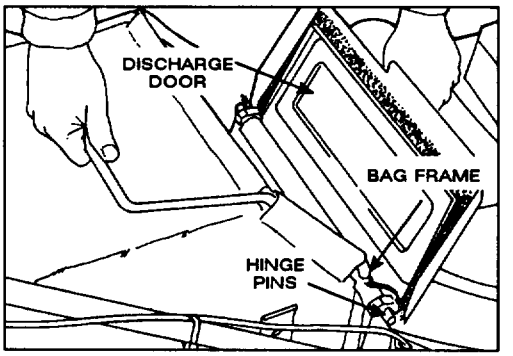

Figure 8

3. CHECKING BAG—To see if grass bag is full, stop engine and wait for all moving parts to stop. Open discharge door to see how full bag is.

⚠ CAUTION

Never open chute door on mower when engine is running because grass clippings and other debris discharges with enough force to cause injury.

The grass bag material will catch and contain the majority of foreign objects such as small stones and other similar debris. The bag material, however, is subject to normal wear and deterioration. So check the bag frequently, and if it is defective, install a new genuine TORO replacement bag that has this or similar warning.

OPERATING INSTRUCTIONS

4. REMOVING BAG—Stop engine and wait for all moving parts to stop. For protection, always keep hands and feet away from mower housing when engine is running. Open discharge door. While holding discharge door, grasp handle on grass bag and lift bag off mower. Allow discharge door to close.

5. EMPTYING BAG—Grasp bag frame handle and rear of bag. Gradually raise rear of bag while shaking bag to empty.

Note: If grass bag is overfilled, some clippings may remain in discharge opening when bag is removed. Normally, these clippings will be blown into grass bag when the bag is reinstalled and the blade is engaged. If the discharge opening remains plugged, be sure to stop engine and wait for all moving parts to stop, before attempting to clear any clippings from the mower.

ADJUSTING HEIGHT-OF-CUT

Three numbers cast into the housing represent the height-of-cut settings. The diamond between each number represent 1/2" increments.

1. Stop the engine.

2. For easier adjustment, lift housing up so wheel is off ground. Squeeze adjusting lever toward wheel and move to desired setting (Fig. 9). Assure pin on adjusting lever engages notch in housing. Adjust all wheels to the same setting.

Note: Front wheels can be adjusted to 1/2 inch. Move adjusting lever past "1" and release pin into notch in housing.

3. In conditions where maximum power is required or when cutting in spongy thatch causing rear wheels to sink in turf, raise rear wheel setting one increment higher. Make sure wheel settings are returned to equal settings, when cutting in normal conditions, to assure the best quality of cut is achieved.

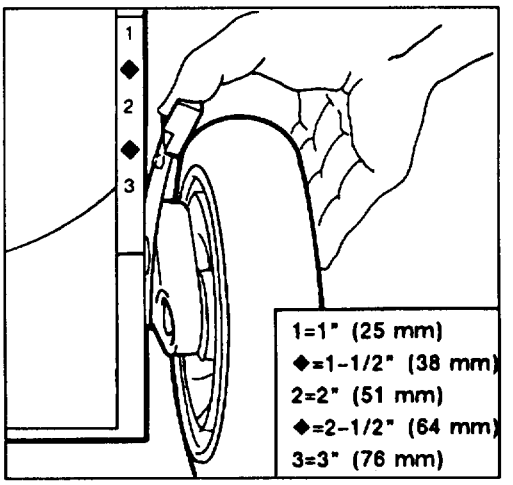

Figure 9

CHECK CONTROL BAR OPERATION

Control bar should be checked periodically, at the beginning of each mowing season as a minimum, to assure the Blade Brake Clutch (BBC) system is operating properly.

1. Start engine; refer to Starting, page 5.

2. Push the control bar down to the lowest position (Fig. 10). This "latches" the mechanism prior to engaging the blade.

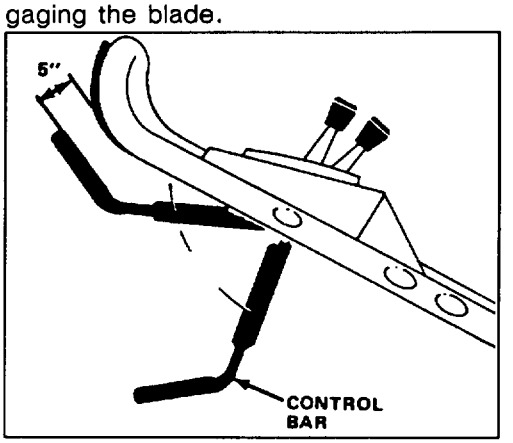

Figure 10

3. Lift the control bar to the normal "blade engaged" position, about 2" below the handle. The "fan" noise and bag inflation indicate that the mower blade is engaged and rotating.

OPERATING INSTRUCTIONS

4. Release the control bar. A "bang" should be heard, and the blade should stop within 3 seconds. If the blade does not stop within 3 seconds when the control bar is released, stop using it until it has been serviced by an Authorized TORO Service Dealer.

If your unit stops within the required 3 seconds, the BBC system is operating properly. However, to detect the BBC system deterioration before it affects normal operation, proceed to step 5.

5. Start engine if not already running.

6. Push the control bar down to its lowest position, latching the mechanism (Fig. 10).

7. Slowly lift the control bar to a point where the bag just begins to inflate (about 5" below the handle). This indicates that the mower blade is engaged and has begun to rotate (Fig. 10).

Note: This intermediate position is not the "natural" operating position of the control bar. However, it has proven to be useful in early detection of latent BBC sticking which could create an unsafe condition later in the life of the mower.

8. Release the control bar.

Note: If a "bang" is heard and the bag immediately deflates, the control bar had been raised too far. Repeat steps 6, 7 & 8, but do not raise the handle as high as in step 8.

If the control bar "hangs up" and the blade does not quickly stop, it indicates possible deterioration has set in which could result in an unsafe operating condition. Have mower inspected by an Authorized TORO Service Dealer.

CAUTION: If the control bar "hangs up", and the blade does not stop quickly, you should stop the blade before shutting off the engine. This can be done by raising the control bar to the normal operating position and releasing it.

MAINTENANCE

⚠ CAUTION

Pull wire off spark plug before performing adjustments or maintenance.

SERVICING AIR CLEANER

Normally, clean air cleaner foam element after every 25 operating hours. More frequent cleaning is required when mower is operated in dusty or dirty conditions.

1. Stop engine and pull wire off spark plug (Fig. 11).

2. Lift tabs at top of air cleaner cover and pivot cover down. Clean cover thoroughly (Fig. 11).

3. If outside of foam element is dirty, remove it from air cleaner body (Fig. 11). Clean thoroughly.

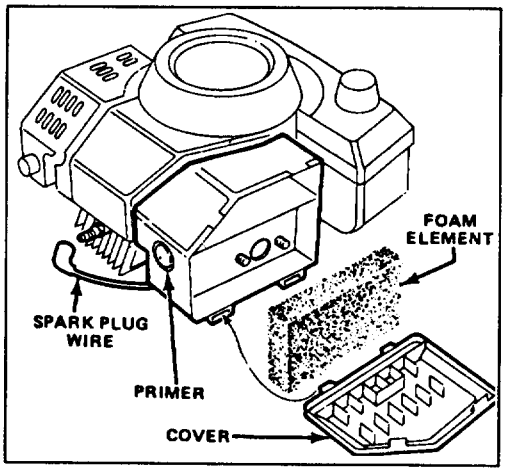

Figure 11

A. WASH foam element in a solution of liquid soap and warm water. Squeeze to remove dirt, but do not twist because foam may tear. Rinse thoroughly in clear water.

B. DRY by wrapping in a clean rag. Squeeze rag and foam element to dry.

C. SATURATE element with 5 teaspoons (25 ml) of SAE 10W30 engine oil. Squeeze element to remove excess oil and to distribute oil thoroughly. A damp element is desirable.

4. Reinstall foam element and air cleaner cover.

IMPORTANT: Do not operate engine without air cleaner element because extreme engine wear and damage will likely result.

REPLACING SPARK PLUG

Use an NGK BPMR4A spark plug or equivalent. Correct air gap is 0.032" (0.81 mm). Remove plug after every 25 operating hours and check its condition.

1. Stop engine and pull wire off spark plug (Fig. 11).

2. Clean around spark plug and remove plug from cylinder head.

IMPORTANT: Replace a cracked, fouled, or dirty spark plug. Do not sand blast, scrape, or clean electrodes because engine damage could result from grit entering cylinder.

3. Set air gap at 0.032" (0.81 mm) (Fig. 12). Install correctly gapped spark plug and gasket seal. Tighten plug firmly to 10 ft-lb (13.6 N·m).

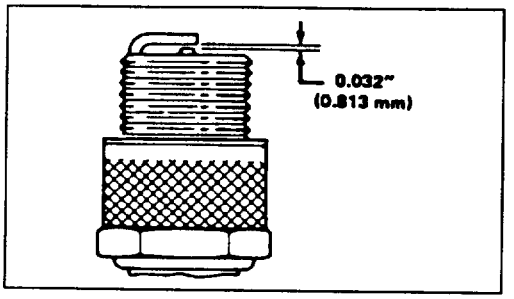

Figure 12

DRAINING GASOLINE

1. Stop engine and pull wire off spark plug (Fig. 11).

2. Remove cap from fuel tank and use pump-type syphon to drain fuel into clean gas can.

Note: This is the only procedure recommended for draining fuel.

ADJUSTING WHEEL DRIVE

If mower does not self-propel or has a tendency to creep forward when drive is not engaged, an adjustment to the wheel traction control cable is necessary.

1. Stop engine and pull wire off spark plug (Fig. 11).

2. Lift control bar until some resistance is felt. Control bar should be 1 1/2" from handle when properly adjusted (Fig. 13).

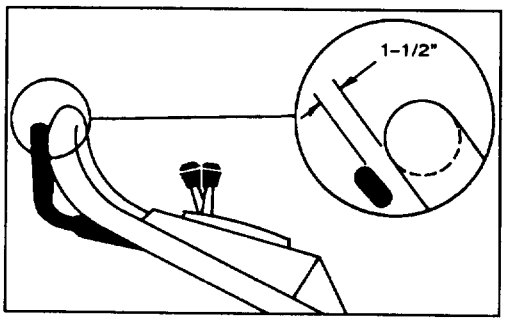

Figure 13

3. To adjust wheel drive cable, rotate knob under left front of control panel (Fig. 14). Rotate knob in positive direction (+) to increase distance between control bar and handle. Turn knob in negative direction (-) to decrease distance between control bar and handle.

4. Repeat steps 2 and 3 until properly adjusted.

MAINTENANCE

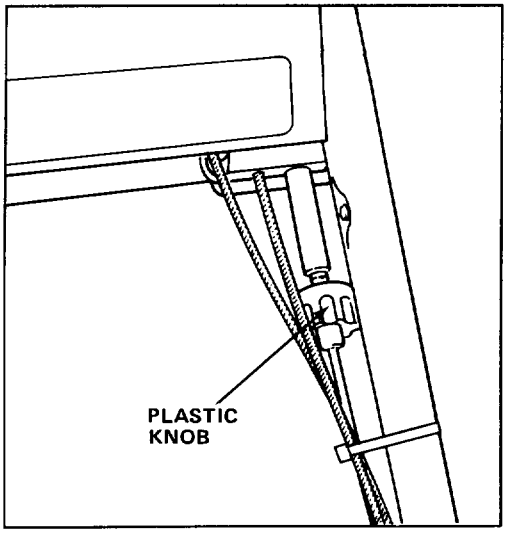

Figure 14

INSPECTING/REMOVING/SHARPENING BLADE

1. Stop engine and pull wire off spark plug (Fig. 15).
2. Drain gasoline from fuel tank; refer to Draining Gasoline, page 9.
3. Tip mower on its right side (Fig. 15). Avoid rotating blade otherwise starting problems may result.

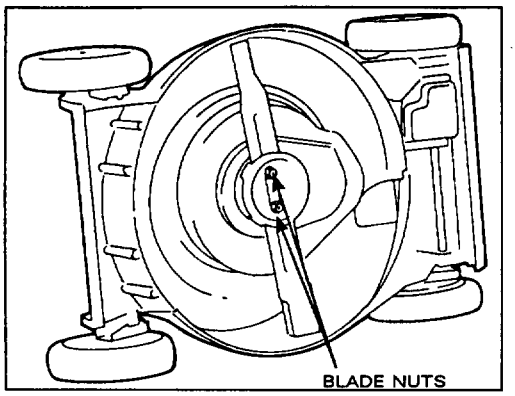

Figure 15

4. INSPECTING BLADE—Carefully examine blade for sharpness and wear, especially where flat and curved parts meet (Fig. 16A). Since sand and abrasive material can wear away the metal that connects the flat and curved parts of the blade, check blade before using the mower. If a slot or wear is noticed, (Fig. 16B & C), replace blade. Refer to step 5.

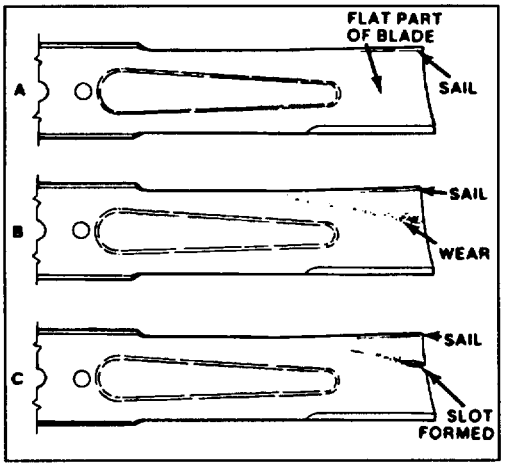

Figure 16

⚠ CAUTION

If blade is allowed to wear, a slot may form near the sail. Eventually a piece of blade may break off resulting in serious injury to yourself or a bystander.

5. REMOVING BLADE—Grasp end of blade using a rag or thickly padded glove. Remove blade nuts, anti-scalp cup, blade, blade spacer, and rotating screen (Fig. 15 & 17).

Note: For optimum performance, install new blade before cutting season begins. During the year, file down small nicks to maintain the cutting edge.

MAINTENANCE

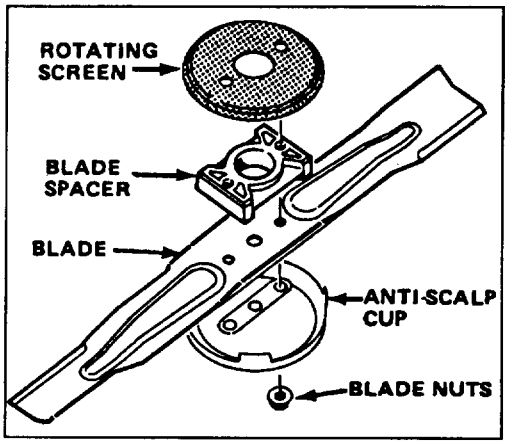

Figure 17

6. SHARPENING BLADE—Using a file, sharpen top side of blade and maintain original cutting angle (Fig. 18). The blade will remain balanced if same amount of material is removed from both cutting edges.

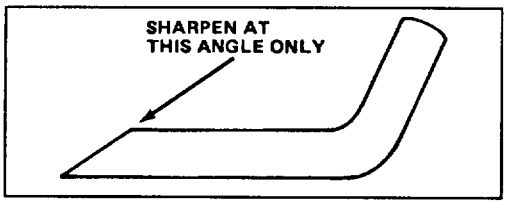

Figure 18

IMPORTANT: Check balance of blade by putting it on a blade balancer. An inexpensive balancer can be purchased at a hardware store. A balanced blade will stay in a horizontal position and an unbalanced blade will settle to the heavy side. If blade is not balanced, file more metal off cutting edge on heavy end of blade.

7. Install rotating screen (outside flange pointing away from housing), blade spacer, sharp, balanced blade, and anti-scalp cup with blade nuts. Sail part of blade must point toward top of mower housing to assure correct installation. Tighten the blade nuts to 25–33 ft-lb.

LUBRICATION

After every 25 operating hours or when season ends, front and rear wheels must be lubricated.

1. Apply 2 or 3 drops of light oil on inside and outside of all wheel bolts. Spin wheels to distribute oil into bushings. Wipe up excess oil.
2. Move rear wheel height-of-cut levers to "2" setting. Wipe grease fittings with clean rag (Fig. 19). Install grease gun onto fitting and gently apply two or three pumps of #2 Multi-Purpose Lithium Base Grease.

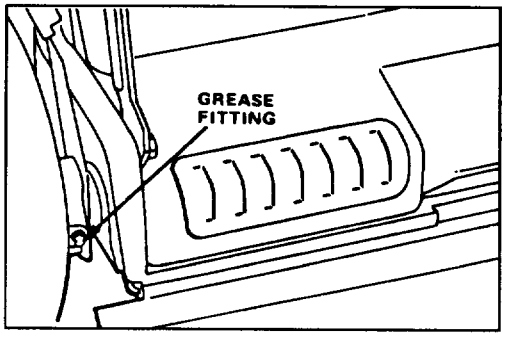

Figure 19

ADJUSTING BLADE BRAKE

1. Stop engine and pull wire off spark plug (Fig. 11).
2. Remove (2) screws securing screen panel to top of mower housing (Fig. 20). Remove panel.

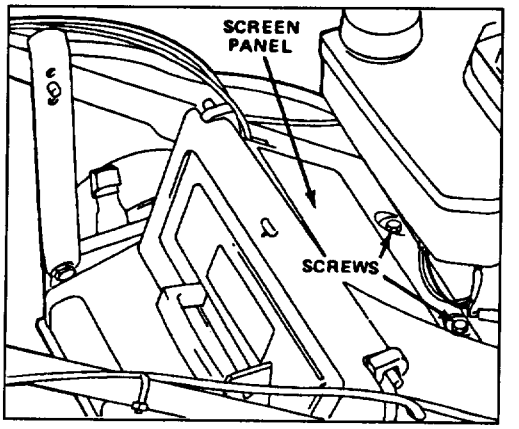

Figure 20

3. Move control bar down and lift up against handle. With control bar against handle, measure spring length (L) at the front of the spring as shown Figure 21.

4. If spring dimension is greater than 1 1/4", an adjustment is needed.

5. To adjust, turn plastic fitting (Fig. 21) counterclockwise until spring dimension is as near as possible to but not less than 1". (See note below.)

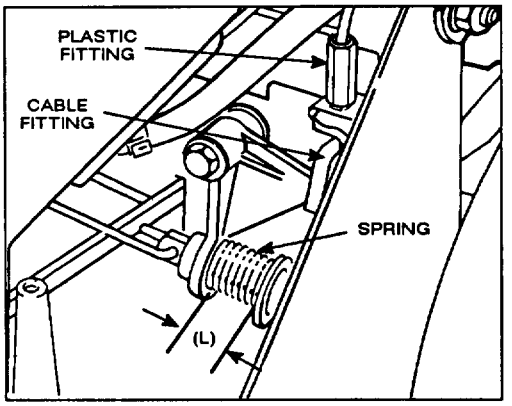

Figure 21

Note: If the spring cannot be adjusted to less than 1 1/4" before reaching the end of the adjustment, the clutch belt is worn out and should be replaced. After replacing belt, adjust cable as described in the above procedure.

CLEANING MOWER HOUSING

To assure optimum performance, keep underside of mower housing and inside of discharge area clean.

1. Drain gasoline from fuel tank: refer to Draining Gasoline, page 9.

2. Tip mower on its right side (Fig. 22). Avoid rotating blade because starting problems may result.

3. Remove dirt and grass clippings that stick to housing by spraying it with a garden hose. Scrape out remaining debris with hardwood scraper. Avoid burrs and sharp edges.

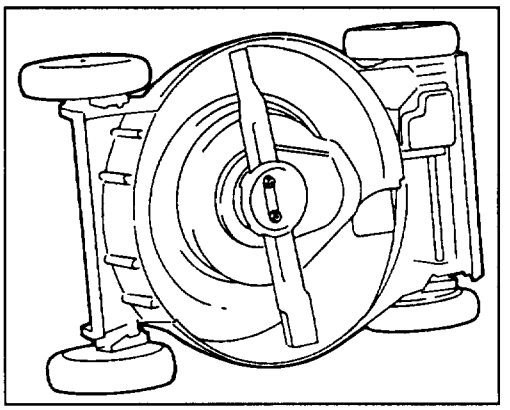

Figure 22

4. Clean discharge door and hinges of grass or debris that may impair operation of door. Use caution when cleaning door so you do not damage foam seal.

5. Remove screen panel on mower housing and clean around blade brake mechanism (Fig. 21).

PREPARING MOWER FOR STORAGE

1. For long term storage, it is recommended that gasoline be drained from fuel tank: refer to Draining Gasoline, page 9. After fuel is drained, start engine and let it idle until all fuel is consumed and engine stops. If gasoline is not drained, gum-like varnish deposits will form and cause poor engine operation or even starting problems.

Fuel can be left in gas tank only if a fuel additive such as Toro's Preservit is added to gasoline before storing. Use fuel additive in recommended quantities as specified on container.

2. Remove spark plug and pour 2 tablespoons of two-cycle oil into hole in cylinder. Pull starter rope slowly to coat inside of cylinder. Install spark plug and tighten to 10 ft-lb (13.6 N·m). **DO NOT INSTALL WIRE ON SPARK PLUG.**

3. Clean mower housing: refer to Cleaning Mower Housing, page 12.

4. Check condition of blade: refer to Inspecting/Removing/Sharpening Blade, page 10.

5. Tighten all nuts, bolts, and screws.

6. Clean dirt and chaff from cylinder, cylinder head fins, and blower housing. Also remove grass clippings, dirt, and grime from external parts of the engine, shrouding, and top of mower housing.

7. Clean air cleaner: refer to Servicing Air Cleaner, page 8.

8. Lubricate the wheels: refer to Lubrication, page 11.

9. Touch up all rusted or chipped paint surfaces. Toro Re-Kote paint is available from an Authorized TORO Service Dealer.

10. Store mower in a clean, dry place. Cover mower to keep it clean and protected.

OPTIONAL EQUIPMENT

For special conditions, the following accessories may be purchased at your local Authorized Toro Service Dealer.

1. Side Discharge Kit, Model No. 59112—Installs in seconds. Rear mounted in place of grass bag. Disperses clippings while trimming on both sides (Fig. 23).

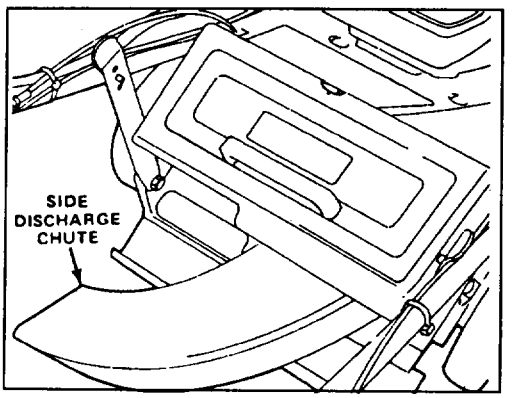

Figure 23

2. Dethatcher Kit, Model No. 59131—Installs in minutes. Front mounted for easy maneuverability. Spring tines loosen thatch and vacuum it into grass bag (Fig. 24) for clean and convenient disposal.

3. Leaf Shredder Kit, Model No. 59180—Installs on underside of mower in minutes without requiring removal of blade. Shreds leaves into small pieces for clean vacuuming into grass bag and convenient disposal (Fig. 25).

4. Spark Arrestor, Part No. 81-0200—If a spark arrestor is required because of local, state, or federal regulations, it may be purchased at your local Authorized TORO Service Dealer. If mower is operated on any California forest, brush, or grass covered land without a properly operating spark arrestor, the operator is violating state law, Section 4442 Public Resources Code.

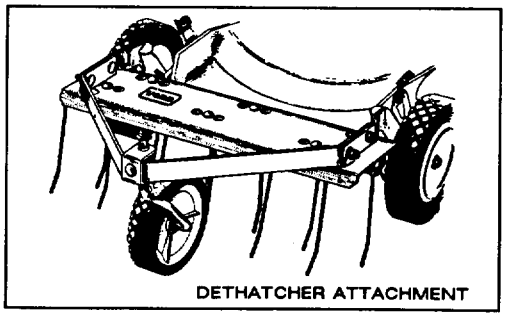

Figure 24

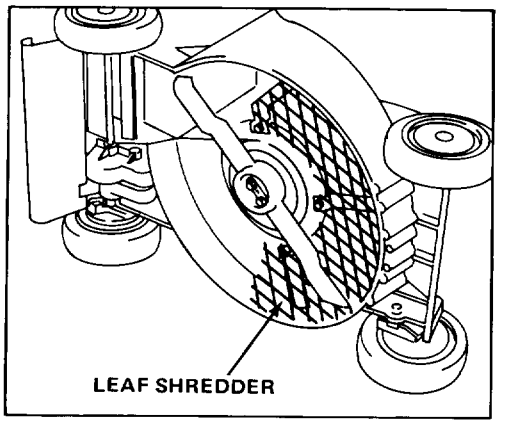

Figure 25

PRODUCT IDENTIFICATION

A model and a serial number decal is located at rear of mower housing, near the discharge door. Always refer to specific numbers on this decal in correspondence or when replacement parts are needed.

TORO SERVICE SUPPORT

If help—concerning safety, set-up, operation, maintenance, or troubleshooting—is ever needed, contact the local Authorized TORO Service Dealer or Distributor. Refer to the "Yellow Pages" for assistance. In addition to skilled service technicians, the dealer and distributor have factory approved accessories and replacement parts. Keep your Toro all TORO. Buy genuine TORO replacement parts and accessories.

MAINTENANCE RECORD

Date	Hours Used	Air Cleaner Service	Lubrication	Spark Plug	Winter Storage	Notes

MAINTENANCE RECORD

Date	Hours Used	Air Cleaner Service	Lubrication	Spark Plug	Winter Storage	Notes

The Toro Promise

A Two Year Limited Warranty On All Gasoline Powered Consumer Products

The Toro Company promises to repair these TORO Products if defective in materials or workmanship. The following time periods from the date of purchase apply:

Residential Product ..... 2 Years
Residential Products Used Commercially ..... 45 Days

The cost of parts and labor are included, but the customer pays the transportation costs. Just return any residential product to an Authorized TORO Service Dealer or TORO Distributor.

Should you feel your TORO Product is defective and wish to rely on The Toro Promise, you may return it to:

1. Contact any Authorized TORO Service Dealer, TORO Master Service Dealer, or TORO Distributor (the Yellow Pages of your telephone directory is a good reference source).
2. He will either instruct you to return the product to him or recommend another Authorized TORO Service outlet which might be more convenient.
3. Bring the product along with your original sales slip, or other evidence of purchase date, to the service dealer.
4. The servicing dealer will inspect the unit, advise you weather the product is defective and, if so, make all repairs necessary to correct the defect without any extra charge to you.

If for any reason you are dissatisfied with the analysis of the defect or the service performed, you may contact us.

Write: TORO Customer Service Dept.
8111 Lyndale Avenue South
Minneapolis, MN 55420

THERE IS NO OTHER EXPRESS WARRANTY EXCEPT FOR THE TORO STARTING GUARANTEE ON THE GTS ENGINE. ALL IMPLIED WARRANTIES OF MERCHANTIBILITY AND FITNESS FOR USE ARE LIMITED TO THE DURATION OF THE EXPRESS WARRANTY.

Some states do not allow limitations on how long implied warranty lasts, so the above limitation may not apply to you.

This warranty applies only to parts or components which are defective and does not cover repairs necessary due to normal wear, misuse, accidents, or lack of proper maintenance. Regular, routine maintenance of the unit to keep it in proper operating condition is the responsibility of the owner.

All warranty repairs reimbursable under The Toro Promise must be performed by an Authorized Toro Service Dealer using Toro approved replacement parts.

Repairs or attempted repairs by anyone other than an Authorized TORO Service Dealer are not reimbursable under the TORO Promise. In addition, these unauthorized repair attempts may result in additional malfunctions, the correction of which is not covered by warranty.

THE TORO COMPANY IS NOT LIABLE FOR INDIRECT OR CONSEQUENTIAL DAMAGES IN CONNECTION WITH THE USE OF THE PRODUCT INCLUDING ANY COST OR EXPENSE OF PROVIDING SUBSTITUTE EQUIPMENT OR SERVICE DURING PERIODS OF MALFUNCTION OR NON-USE.

Some states do not allow the exclusion of incidental or consequential damages, so the above exclusion may not apply to you.

This warranty gives you specific legal rights, and you may also have other rights which vary from state to state.

COUNTRIES OTHER THAN THE UNITED STATES OR CANADA

Customers who have purchased TORO products exported from the United States or Canada should contact their TORO Distributor (Dealer) to obtain guarantee policies for your country, province, or state. If for any reason you are dissatisfied with your Distributor's service or have difficulty obtaining guarantee information, contact the TORO Importer. If all other remedies fail, you may contact us at The Toro Company.