FORM NO. 3314-187 Rev. A

TORO®

MODEL NO. 51255 – 0000001 THRU
1000001 & UP

OPERATOR'S MANUAL

10 INCH CUT SUPER HOME DUTY TRIMMER
MODEL 1010

IMPORTANT SAFETY INSTRUCTIONS

⚠ WARNING

To assure maximum safety, optimum performance, and to gain knowledge of the product, it is essential that you or any other operator of the trimmer read and understand the contents of this manual before the motor is ever started. Pay particular attention to the safety alert symbol ⚠ which means CAUTION, WARNING, OR DANGER — "personal safety instruction." Read and understand the instruction because it has to do with safety. FAILURE TO COMPLY WITH INSTRUCTION MAY RESULT IN PERSONAL INJURY.

SAVE THESE INSTRUCTIONS FOR FUTURE REFERENCE

1. Read and understand the contents of this manual before operating the trimmer. Become familiar with all controls and know how to stop quickly.

2. Keep everyone, especially children and pets, away from area of operation.

3. Never allow children to operate trimmer. It is not a toy. Never allow adults to operate unit without first reading Operator's Manual.

4. Always wear safety goggles or other suitable eye protection.

5. Avoid Dangerous Environment—Never operate the trimmer in wet or damp conditions.

6. Never use trimmer in the rain.

7. Inspect area thoroughly where trimmer will be used. Keep area of operation clear of all persons, particularly small children and pets.

8. Dress properly—Do not wear loose clothing or jewelry. They can be caught in moving parts. Always wear substantial footwear and long pants. Use of rubber gloves is recommended.

9. Use the right appliance—Do not use the appliance for any job except that for which it was intended.

10. WARNING—To reduce risk of electric shock, use only an extension cord suitable for outdoor use. Replace damaged extension cord immediately.

11. Extension cord—To prevent disconnection of the power supply cord from the extension cord during operation, properly connect extension cord prior to operating.

12. Avoid unintentional starting. Be sure switch is off when plugging in. Do not carry plugged-in trimmer with finger on switch.

13. Don't abuse cord. Never yank cord to disconnect from receptacle. Keep cord away from heat, oil, and sharp edges. Replace damaged cords.

14. Don't force the trimmer. It operates better and safer at the rate for which it was designed.

15. Use only in daylight or with good artificial light. Always be sure of your footing. Keep a firm hold on the handle and walk, never run.

16. Stop the motor and unplug the supply cord whenever you leave the trimmer, before cleaning the housing, and when making any repairs or inspections.

17. When not in use, store your trimmer in a dry place; high or locked up out of the reach of children.

18. Keep all fasteners tight to insure the trimmer is in safe working condition.

19. Never operate without proper guards or other protective safety devices in place.

20. Do not put hands or feet near or under rotating parts. Keep clear at all times.

21. If the trimmer should start to vibrate abnormally, stop the motor and check immediately for the cause. Vibration is generally a warning of trouble.

22. Do not operate your Toro trimmer after it has been dropped or damaged. Return it to your nearest authorized service dealer for inspection and repair.

23. When servicing use only identical replacement parts. Replace or repair damaged cords.

24. Don't Overreach—Keep proper footing and balance at all times when operating the trimmer.

©The Toro Company–1990

⚠ SAFETY INSTRUCTIONS

25. Maintain Appliance With Care—Keep cutting head and motor housing clean for best performance and to reduce the risk of injury. Follow General Maintenance instructions on page 8.

26. CAUTION—Cutting knife on grass shield is sharp and care should be taken when cleaning and handling.

EXTENSION CORD REQUIREMENTS—Use an extension cord suitable for outdoor use and one that complies with the requirements specified in the International Electric Code. Make sure your cord is in good condition; if damaged, replace. Use a cord that is large enough to carry the current the trimmer will draw. Figure 1 shows the correct size cord to use for trimmers of 6 amps or less.

Note: When in doubt about what size cord to use, choose the next heavier gage. The smaller the gage number, the heavier the cord. An undersized cord causes a drop in line voltage which could result in a loss of power and overheating

See Figures 7 & 8 for proper cord connection.

EXTENSION CORD CHART

If length of extension cord is less than or equal to:	100 ft.	150 ft.
Assure wire size gage (A.W.G.) in cord is:	16	14

Figure 1

ASSEMBLY INSTRUCTIONS

SECURE UPPER AND LOWER TUBES

1. Remove and discard shipping wire secured to upper and lower handle tubes.

⚠ CAUTION

Using trimmer with damaged wiring could cause personal injury. Inspect the open internal wiring. If damaged, do not assemble or plug in trimmer. Contact your Authorized Toro Service Dealer.

2. Pivot tube ends until aligned (Fig. 2).

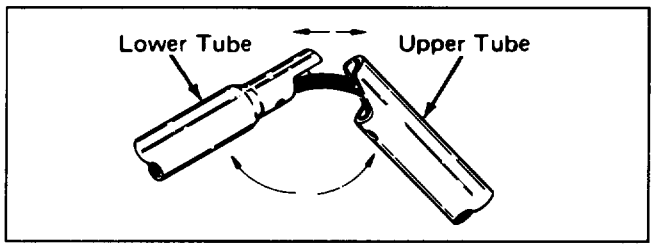

Figure 2

3. Slide lower tube into upper tube and align screw holes (Fig. 3). Check alignment of handgrip and housing.

4. Secure with capscrew and locknut and tighten until all play between tubes is eliminated (Fig. 4).

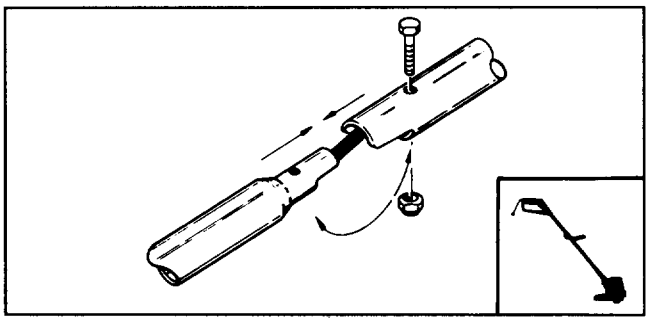

Figure 3

⚠ CAUTION

Crimped or torn wiring may cause personal injury or damage to machine. Be sure internal wiring does not interfere with installation of capscrew. Use the shipping wire or another blunt object such as a punch to carefully route internal wiring away from aligned holes.

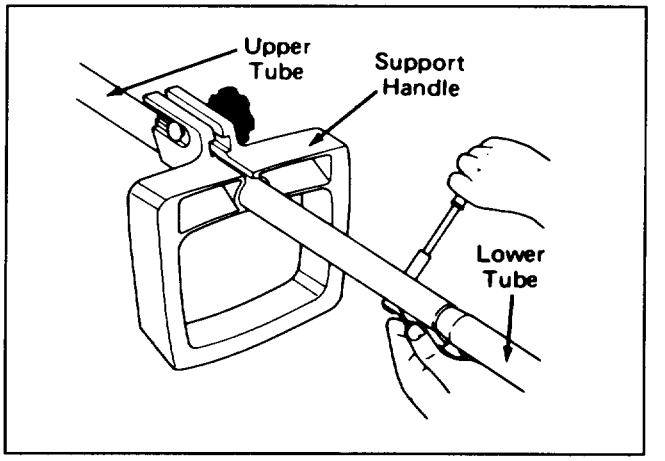

Figure 4

ASSEMBLY INSTRUCTIONS

5. Loosely secure support handle to tube with carriage bolt and knob.

6. Support handle may now be adjusted to desired operating position by sliding handle to desired height and tightening knob (Fig. 4).

7. Remove tape from cut-off blade.

⚠ CAUTION

Cutting knife on grass shield is sharp and may cause personal injury. Care should be taken when handling shield. Avoid contact with knife blade.

BEFORE OPERATING

CUTTING LINE

Note: The cutting line for your trimmer is a special monofilament line. Your trimmer comes complete with a 30 foot supply of this line already wound onto the spool.

1. To avoid line tangle during shipment, the tip of the monofilament line has been taped to the head assembly. The tape must be removed before operation (Fig. 5).

2. After each use, either retape or loop the line through the eyelet (Fig. 6) to prevent unraveling.

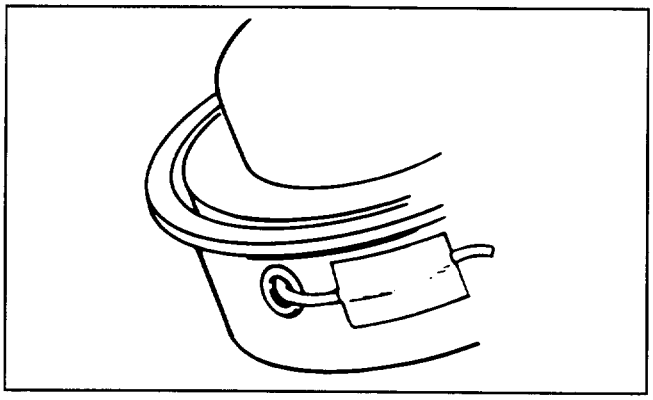

Figure 5

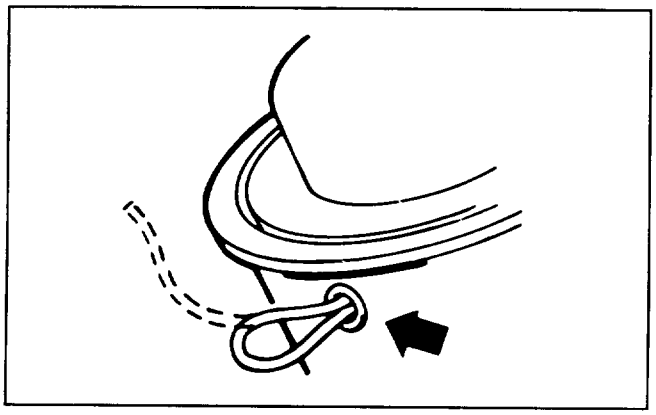

Figure 6

SECURING PIGTAIL POWER CORD

Note: The proper extension cord is a requirement for safe and efficient use of your Toro trimmer.

Use only a UL listed extension cord recommended for outdoor use.

1. Secure the pigtail power cord and a suitable extension cord in cord lock as shown in Figures 7 & 8.

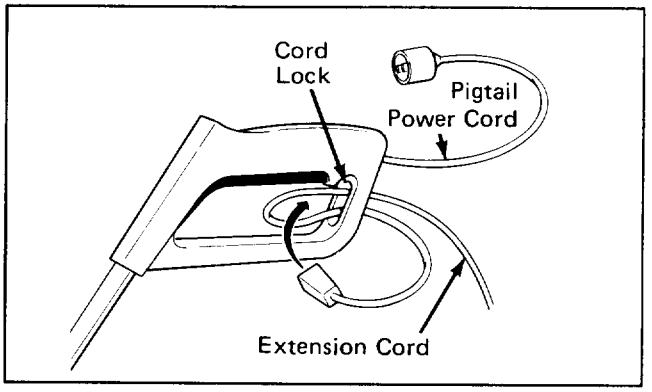

Figure 7

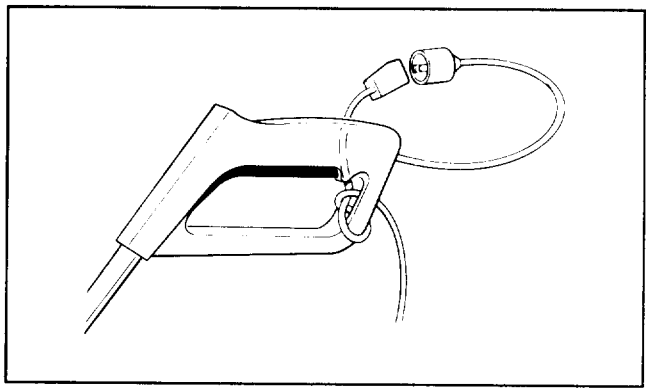

Figure 8

⚠ CAUTION

A damaged electrical cord could cause personal injury. Thoroughly inspect trimmer power cord before operating trimmer. If cord is damaged, do not operate trimmer. Replace or repair damaged cord. Contact your TORO service dealer for assistance.

OPERATING INSTRUCTIONS

⚠ CAUTION

Thrown objects can cause injury to the operator or bystanders. Always wear safety goggles or other suitable eye protection, long pants, and shoes while operating trimmer. Keep people and pets away from trimming area.

Your trimmer will cut grass and small weeds in difficult and hard to reach places. However, you will most likely experience some line breakage during your first few uses. As you learn the trimming techniques, you will be able to cut areas around trees, shrubs, foundation walls, fences, sidewalks, patios, etc., with minimal line wear or line breakage.

1. Inspect area to be trimmed for any wire, cord, or string-like matter which could become entangled in the rotating line.

2. Lay out the extension cord so that it won't be in your way and to prevent kinking or tangling.

3. Trim only when grass and weeds are dry.

4. Slowly move unit in and out of area being cut, maintaining unit at desired cutting height. This can be either a forward-backward or side-to-side motion as shown in Figures 9 & 10.

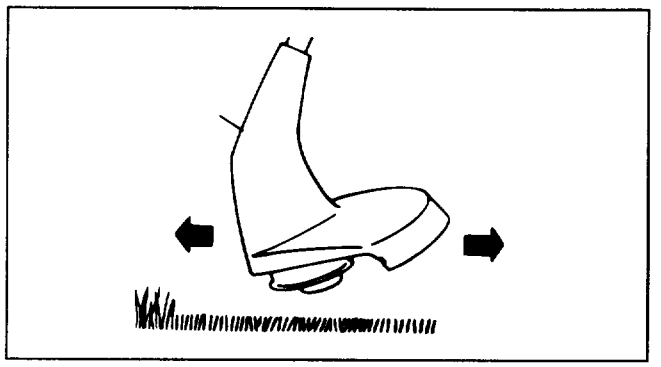

Figure 9

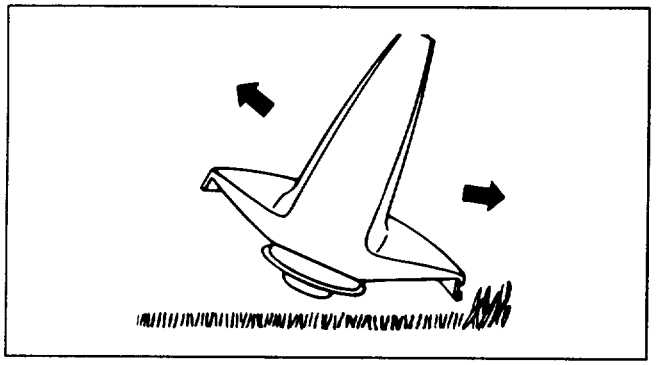

Figure 10

5. Grass in excess of 8 inches tall or small weeds should be cut by working from the top to the bottom in small increments to avoid premature line wear.

6. Whenever possible, cut to your left. When cutting to the left, the unit's cutting efficiency is somewhat better since the line is contacting the grass as soon as it leaves the guard, and the clippings are moving away from the operator.

7. **DO NOT FORCE THE UNIT.** Allow the very *tip* of the nylon line to do the cutting (especially along walls) (Fig. 11). Cutting with more than the tip will reduce cutting efficiency and overload the motor.

The tip of the cutting line will wear during use and will require lengthening. If the line is not advanced occasionally, it will wear down to the drum eyelet. When the trimmer is stopped the line will tend to **relax** and **may retract into the drum**. Should this occur, be sure to replace the cutting line in the proper position before restarting the trimmer (page 7, #3) or the line may tangle around the drum.

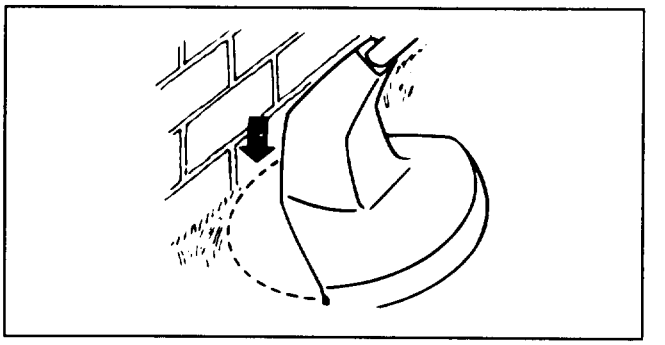

Figure 11

8. The life of your cutting line is dependent upon following the above trimming techniques, as well as what is being cut, and where the cutting is being done. For example, line wears faster when trimming against a foundation wall as opposed to trimming around a tree. Some line breakage will occur from moving unit too fast, from entanglement with foreign matter, from normal line fatigue, and from attempting to cut thick, stalky weeds in excess of unit's capability. As cutting line wears, for best performance, lengthen as indicated in Lengthening Cutting Line procedure.

OPERATING INSTRUCTIONS

9. Never drag the trimmer spool cap on the ground while trimming (Fig. 12). This causes motor overload and spool cap wear.

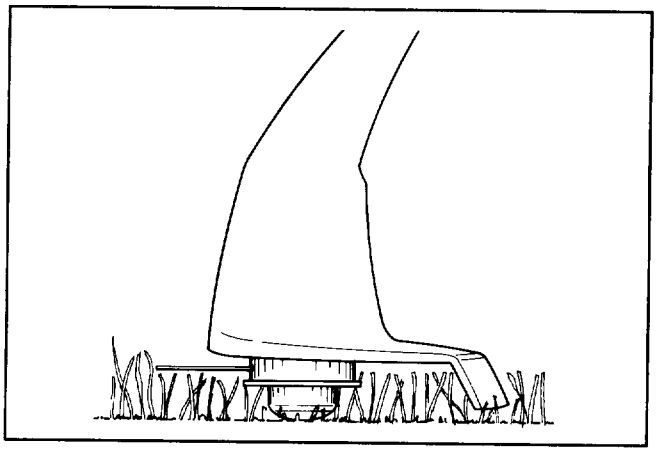

Figure 12

10. After each use, either retape or loop the line through the eyelet (Fig. 6) to prevent unraveling.

LENGTHENING CUTTING LINE

1. To lengthen line, firmly tap spool on the ground while the motor continues to run. The line will be fed from the spool and cut off to the proper length by the cutting knife attached to the shield (Fig. 13).

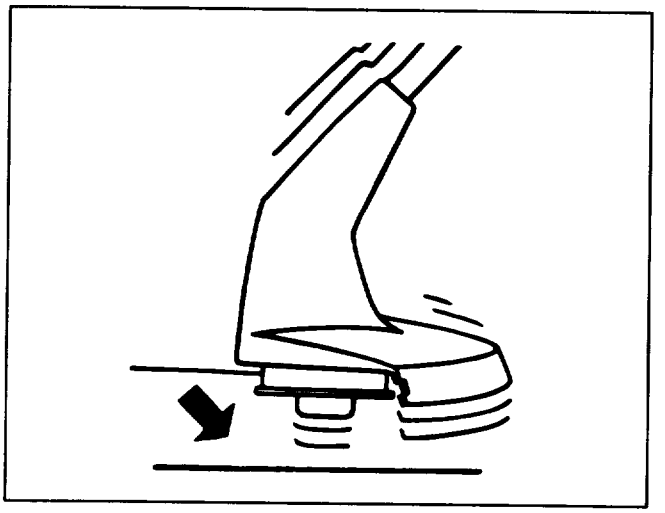

Figure 13

Remember to keep the trimmer 'on' while lengthening the line. Just tap the trimmer on the ground; do not hold it on the ground. After the tap and line has fed out, wait until you hear the line being cut to the proper length before continuing to trim.

Note: To help prevent line tangle, tap once only to lengthen line. If additional line is required, wait a few seconds before retapping trimmer head. Do not allow line to wear too short. Keep line length at 10" diameter as much as possible.

2. Lengthen line only when line has been shortened by wear. Unnecessary lengthening will waste line.

Note: The spool cap may wear during normal use of the line advance feature and may require occasional replacement. Replacement spools are available through your TORO retailer.

⚠ CAUTION

Use only TORO .050" dia. nylon monofilament cutting line for best performance.

REPLACING CUTTING LINE

Replacement line or prewound replacement spools can be purchased from your local Toro retailer. The cutting line used by Toro is specially formulated for use on your trimmer. Other line may not provide the same high quality performance.

⚠ CAUTION

A rotating cutting head can cause personal injury. Always unplug supply cord and be sure cutting head has completely stopped rotating before inverting trimmer.

1. To remove empty spool, insert widest possible blade screwdriver snugly into one of two window slots. With screwdriver pressed firmly into window slot, twist screwdriver 1/4 turn. Spool will snap off (Fig. 14).

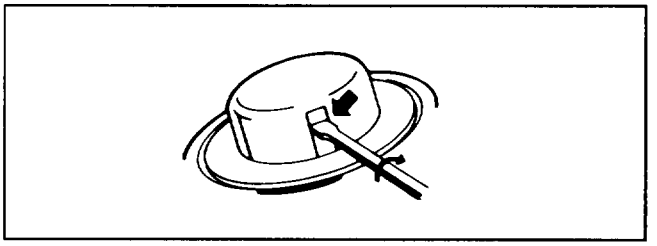

Figure 14

2. To rewind empty spool, follow the steps below:

A. Hook one end of line into groove on spool, allowing no more than 1/8" to protrude. Wind line in direction of arrows on spool in level rows between spool flanges (Fig. 15).

Note: Trimmer will not function properly if line is wound in the wrong direction.

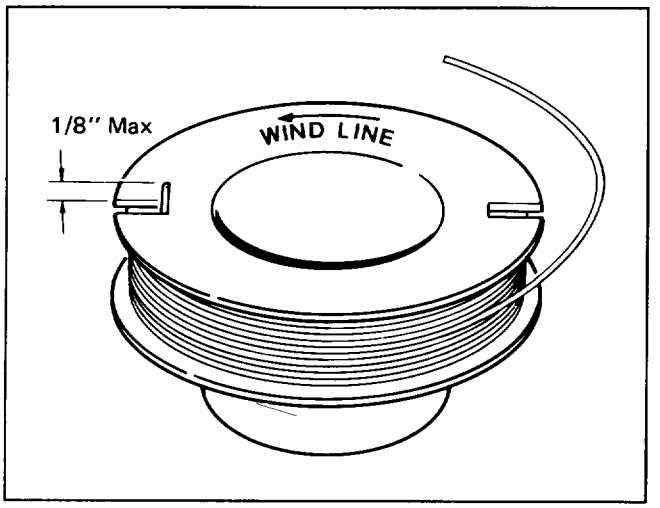

Figure 15

B. Do not wind more than 30 feet of line onto spool. Do not use line over .050" diameter.

C. Keep line tight on spool by making a hook in the line and secure in groove (Fig. 16).

Note: Before assembly, be sure to thoroughly clean out drum area and visually inspect for any damaged or worn parts.

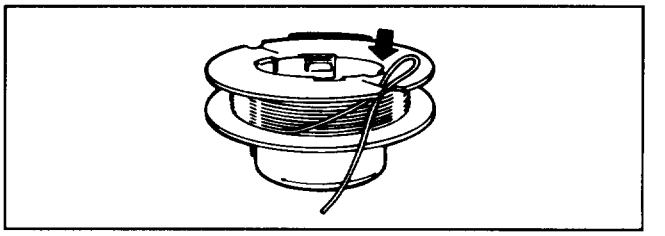

Figure 16

D. The spool and the core are keyed. Be sure they are properly aligned with eyelet when putting spool back on. Thread end of line through eyelet, place spool on keyed core, and push in place until you hear it click. Pull line free from groove in spool. Unwind no more than 3 inches from spool (Fig. 17).

⚠ CAUTION

A loose spool can fly off of machine and cause injury to operator or bystanders. Be sure spool is fully secured before operating the unit. Replace spool if it is damaged or does not securely snap on core. Keep bystanders and pets away from trimming area.

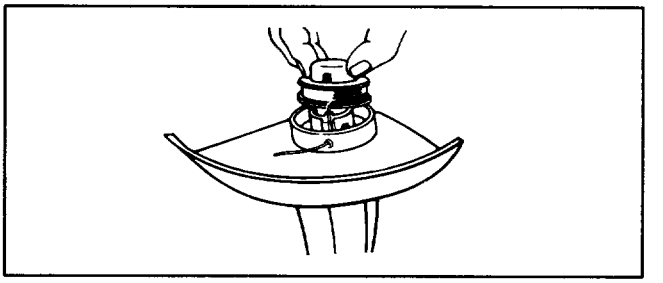

Figure 17

3. If line should tangle or break at eyelet, refeed cutting line through eyelet by pushing spool in as far as it will go and threading line back through eyelet. Or you may remove spool completely, refeed the line through the eyelet, and reassemble spool to trimmer (Fig. 18).

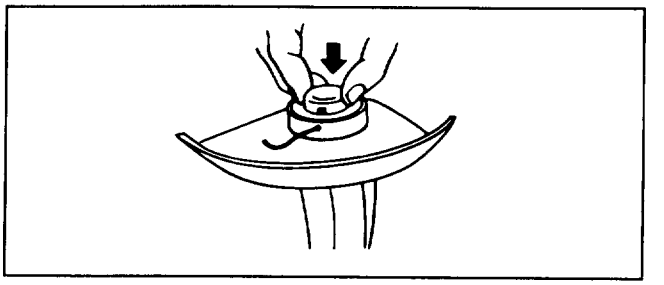

Figure 18

GENERAL MAINTENANCE

⚠ CAUTION

Inadvertent starting can cause personal injury. Always be sure your trimmer is unplugged and stopped before attempting any maintenance.

1. To keep the exterior clean, just wipe it off with a damp cloth. Never hose it down.

2. Wipe or scrape clean the drum and spool area any time there is an accumulation of dirt or cuttings.

3. Check and tighten all fasteners. If any part is damaged, repair or replace it.

4. Air exhaust vent is located on underside of shield (Fig. 19). Scrape vent clean regularly.

5. Wipe debris away from air intake holes in motor housing (Fig. 19).

IMPORTANT: Keeping intake and exhaust vents free of grass and debris prevents motor overheating and possible failure.

6. Any other servicing should be performed by an authorized Toro Service Dealer.

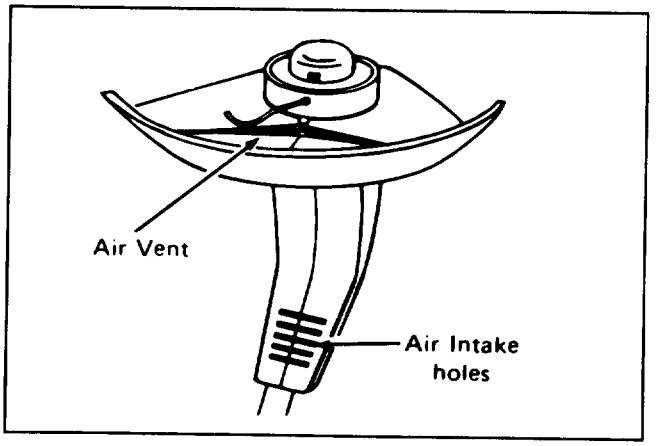

Figure 19

IDENTIFICATION AND ORDERING

The trimmer has two identification numbers: a model number and a serial number. The two numbers are stamped on a decal that is located on handle tube.

In any correspondence concerning the trimmer, supply the model and serial numbers to assure that correct information and replacement parts are obtained.

To order replacement parts from an Authorized Toro Service Dealer, supply the following information.

1. Model and serial numbers of the trimmer.

2. Part number, description, and quantity of part(s) desired.

Note: Do not order by reference number if a parts catalog is being used; use PART NUMBER.

ACCESSORIES

PART NO.	DESCRIPTION
88015	Prewound Spool
44-5520	Empty Spool
88011	30' Coil—.050" Cutting Line

The Toro Promise

A Two Year Full Residential Use Warranty

The Toro Company warrants this TORO Product for two years against defects in material or workmanship. To receive a replacement or repair, at Toro's option, just return the complete unit, postage prepaid, to the seller or any TORO Electric Service Dealer or the TORO Service Center, 5300 Shoreline Blvd., Mound, MN 55364, along with proof of purchase. This warranty covers product defects only. It does not cover incidental or consequential damages. **Some states do not allow the exclusion or limitation of incidental or consequential damages, so the above limitation may not apply to you.** This warranty gives you specific rights, and you may have other rights which vary from state to state.

COUNTRIES OTHER THAN THE UNITED STATES OR CANADA

Customers who have purchased TORO products exported from the United States or Canada should contact their TORO Distributor (Dealer) to obtain guarantee policies for your country, province, or state. If for any reason you are dissatisfied with your Distributor's service or have difficulty obtaining guarantee information, contact the TORO importer. If all other remedies fail, you may contact us at The Toro Company.