FORM NO. 3314–239

TORO®

MODEL NO. 30589

INSTALLATION INSTRUCTIONS

COLD STARTING KIT
GROUNDSMASTER® 580D

⚠ WARNING

Do not smoke when installing, maintaining, testing or trouble shooting the cold starting system. Make sure you are In a well ventilated area away from heat, open flames or sparks. Wear goggles when testing to avoid eye Injury. Starting fluid Is extremely flammable and toxic. It can be harmful or fatal If swallowed. Avoid contact with skin or eyes or breathing the fumes. if fluid or fumes enter or irritate the eyes, flush with large quantities of water for 15 minutes and contact a physician.Contents of canister are under pressure. Store In a cool area. Do not incinerate, puncture or attempt dismantle canister.

1. Using injector bracket as a template, locate, mark and drill (4) .375” dia. holes in air cleaner base. Holes to be positioned 1” from right edge of bracket and centered vertically on bracket.

2. Mount valve assembly bracket to injector bracket with (4) capscrews and locknuts.

3. Mount valve assembly and injector bracket to air cleaner base with (4) capscrews and locknuts.

4. Install gasket over fluid canister threads until it contacts bottom of canister neck. Thread canister into valve until gasket makes contact, then tighten an additional 1/2 turn.

5. Mount and tighten clamp securing canister to bracket.

6. Thread elbow fitting (left–hand dry seal threads) into bottom of valve finger tight. With wrench, tighten fitting an additional 1 or 2 turns until it points toward rear of machine.

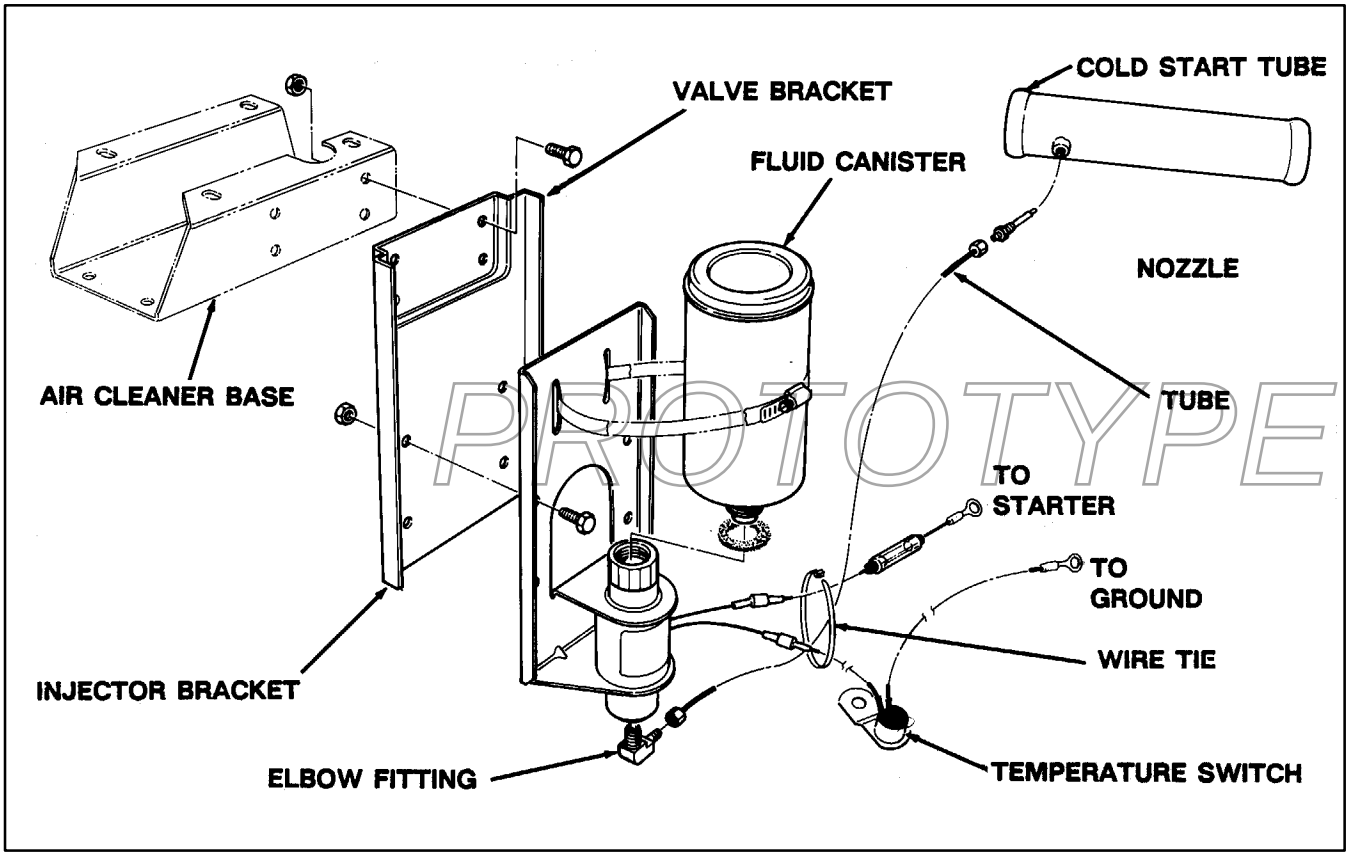

Figure 1

© The TORO Company – 1990

7. Remove (2) hose clamps securing pipe between intake manifold and turbo charger. Remove pipe. Install cold start tube to intake manifold and turbo charger using clamps previously removed. End of tube with nozzle port connected to manifold.

8. Thread nozzle into port on cold start tube. Make sure nozzle orifice in tube points toward turbo charger. Mark on nozzle indicates direction of orifice.

9. Cut nylon tubing to a length of 25". Make sure ends of tubing are cut square so they seat properly in fittings.

10. Insert tube ends into fittings. Connect tubing fittings to fitting on valve and nozzle on cold start tube. Tighten fittings (1) additional turn after finger tight. Check to make sure tubing is being compressed in fittings when tightening.

IMPORTANT: Make sure tubIng does not contact any hot surfaces, sharp edges or movIng parts which could cause damage to tubIng.

11. Drain coolant from engine block. Remove bolt and washer from left side of engine block (Fig. 2). Install temperature switch to engine block with bolt and washer previously removed. Replenish engine coolant. Check for leaks.

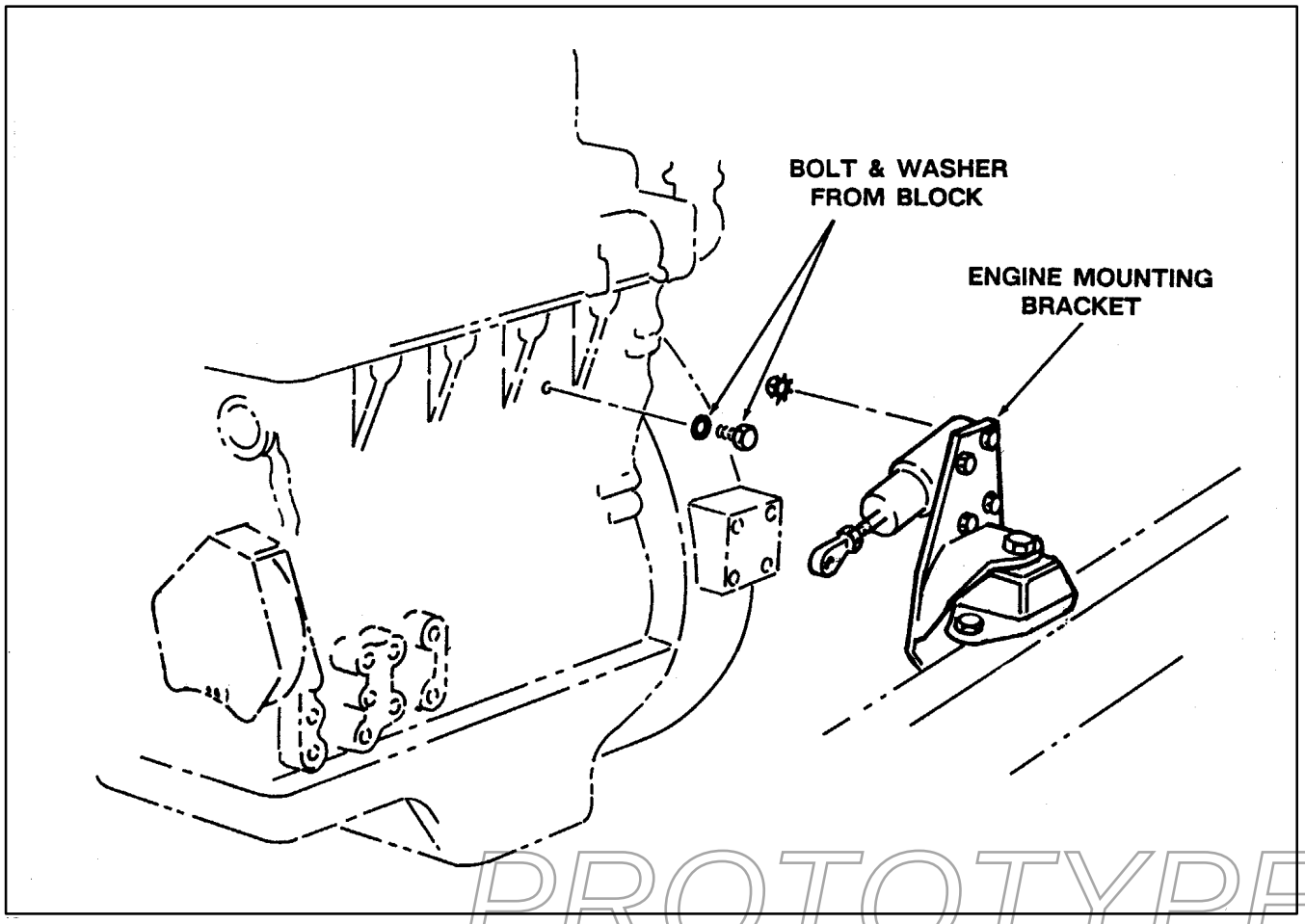

PROTOTYPE

Figure 2

12. Disconnect positive (+) cable from battery. Secure fused wire from valve to motor connector on starter solenoid.

13. Remove (1) of the capscrews and lockwashers securing solenoid to left rear engine mounting bracket (Fig. 2). Mount ground wire from temperature switch to bracket with capscrew and lockwasher removed.

14. Make sure wire connections from valve are secure and reconnect battery cable.

15. Secure both wires from valve and tubing together with wire tie included in kit.

IMPORTANT: Make sure wires or tubIng does not contact any hot surfaces, sharp edges or moving parts which could cause damage.