FORM NO. 3314-292

TORO®

MODEL NO. 20211 - 1000001 & UP

OPERATOR'S MANUAL

21" (0.53 M) SP RECYCLER™

FINGERTIP START

⚠ SAFETY INSTRUCTIONS

This mower "meets or exceeds CPSC blade safety requirements for walk behind rotary mowers" and the B71.1-1986 specifications of the American National Standards Institute. However, improper use or maintenance by the operator or owner can result in injury. To reduce the potential for injury, comply with these safety instructions and always pay attention to the safety alert symbol. Failure to comply with these instructions may result in personal injury.

BEFORE OPERATING

1. Read this manual carefully before operating the mower. Become familiar with the controls and proper use of the mower. Never allow children to operate the mower or adults to operate it without proper instructions.
2. Keep everyone, especially children and pets, away from area of operation. Thoroughly inspect area where mower will be used and remove sticks, stones, wire, and debris.
3. Wear long pants and substantial shoes. Do not operate mower while wearing open sandals or when barefoot.
4. Always wear safety glasses or eye shields during operation to protect eyes from foreign objects that may be thrown from the machine.
5. Check fuel level before starting engine. Do not fill fuel tank indoors or when the engine is running. Wait until engine cools for several minutes after running. Wipe up spilled gasoline before starting engine.
6. Keep all guards, shields, and safety devices in place. Repair or replace defective or damaged parts, including decals.
7. Traction drive and blade are designed to stop when control bar is released. Assure control bar and brake function properly before each use of mower.

WHILE OPERATING

8. Do not run engine indoors.
9. Always maintain secure footing. Keep a firm grip on the handle and walk; never run. Never operate mower in wet grass. Mow only in daylight or in good artificial light.
10. Mow across the face of slopes; never up and down. Use extreme caution when changing direction on slopes. Do not mow excessively steep slopes.
11. Keep face, hands, and feet away from the mower housing and cutter blade when the engine is running. Stay behind the handle until the engine stops and keep clear of discharge opening at all times.
12. When bagging grass, stop engine and assure discharge door is closed before the bag is removed and emptied.
13. Shut engine off and wait for all moving parts to stop before unclogging discharge tunnel, removing grass bag or Recycler plug.
14. Since the blade rotates for a few seconds after the blade control is released, stay behind the handle until all moving parts stop.

©The Toro Company-1990

⚠ SAFETY INSTRUCTIONS

15. After striking a foreign object or if mower vibrates abnormally, stop engine and remove wire from spark plug. Check mower for damage and make all repairs before using mower again.

16. Stop engine before leaving the operator's position—behind the handle. Disconnect wire from spark plug if mower will be unattended or not used.

17. Stop the engine before adjusting the height-of-cut.

18. Stop the engine when crossing a gravel driveway, road, or sidewalk.

19. Do not touch engine while it is running or shortly after it is stopped because engine will be hot enough to cause a burn.

MAINTENANCE AND STORAGE

20. Perform only those maintenance instructions described in this manual. If major repairs are ever needed or if assistance is desired, contact your local Authorized TORO Service Dealer.

21. Before mower is cleaned, inspected, serviced or adjusted, stop engine and disconnect wire from spark plug. Keep wire away from plug to prevent accidental starting.

22. To assure the mower is in safe operating condition, frequently check and keep all nuts, bolts, and screws tight. Assure blade nuts are tightened to 50 ft-lb (68 N·m).

23. To reduce fire hazard, keep engine free of excessive grease, grass, leaves, and accumulations of dirt.

24. Check grass catcher bag frequently for wear or deterioration. Replace with a new bag for your protection. Check that replacement bags comply with original TORO recommendations or specifications.

25. Allow engine to cool before storing mower in any enclosure. Do not store mower with gasoline in fuel tank near any open flame or where gasoline fumes may be ignited by a spark.

26. Do not overspeed the engine by changing governor settings.

27. At the time of manufacture, the mower conformed to the safety standards in effect for rotary mowers. To assure optimum performance and continued safety certification of the mower, use genuine TORO replacement parts and accessories. Replacement parts and accessories made by other manufacturers may result in non-conformance with the safety standards, and that could be dangerous.

SAFETY DECALS AND INSTRUCTIONS

Safety decals and instructions are easily visible to the operator and are located near any area of potential danger. Replace any decal that is damaged or lost.

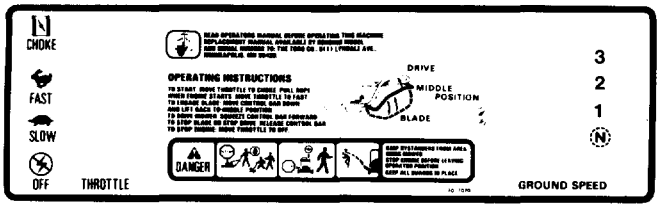

On control panel



On mower housing
(Part No. 43-8480)



On Recycler plug

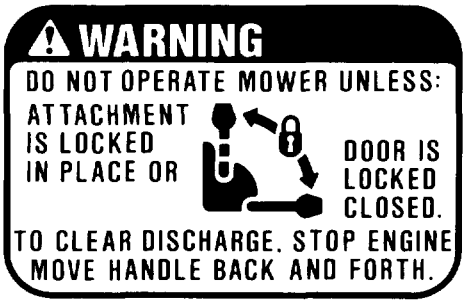

On discharge tunnel



On grass bag

TABLE OF CONTENTS

	Page
Set-Up Instructions	4
Before Operating	5
Recycling	6
Operating Instructions	8
Maintenance	12
Servicing Air Cleaner	12
Replacing Spark Plug	13
Draining Gasoline	13
Adjusting Throttle	14
Adjusting Wheel Traction Drive	14
Inspecting/Removing/Sharpening Blade	15
Lubrication	16
Adjusting Blade Brake	16
Adjusting Ground Speed Control For Neutral	16
Cleaning Blade Brake Clutch Shield	17
Cleaning Mower Housing, Discharge Tunnel, and Recycler Plug	17
Preparing Mower For Storage	18
Optional Equipment	19
Toro Service Support	20
Product Identification	20
The Toro Starting Guarantee	21
Guaranteed To Start Maintenance Record	23
The Toro Promise	

SET-UP INSTRUCTIONS

INSTALL HANDLE

1. Align handles and tighten handle knobs (Fig. 1). Bend handle latches slightly toward each other (Fig. 1).

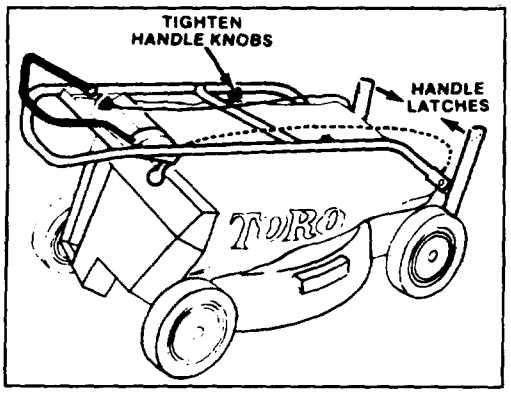

Figure 1

2. Pivot handle backward until handle stud snaps into center hole of handle latch (Fig. 2). If handle height is not satisfactory, adjust by placing handle stud into a different hole.

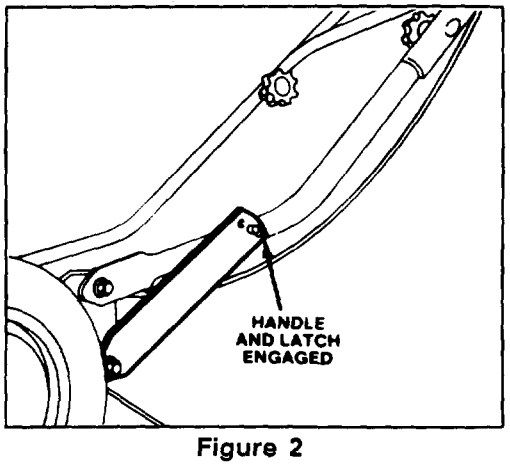

Figure 2

INSTALL RECYCLER DISCHARGE PLUG

1. Open the discharge door by pulling forward on the handle and moving it rearwards (Fig. 3). Hold the discharge door handle to prevent the spring-loaded door from closing while inserting the plug.

2. Since the plug is slightly wider than the discharge tunnel opening, rotate the plug clockwise slightly while inserting it (Fig. 3). Make sure the arrow on the plug decal is pointing upwards.

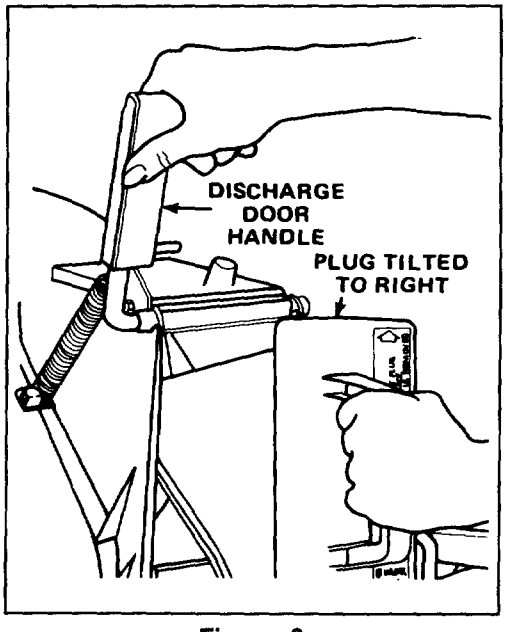

Figure 3

3. Push the plug all the way in until the spring clip on the bottom of the plug clicks into place, locking the plug securely into the discharge tunnel (Fig. 4). Release the discharge door handle to lock top of plug.

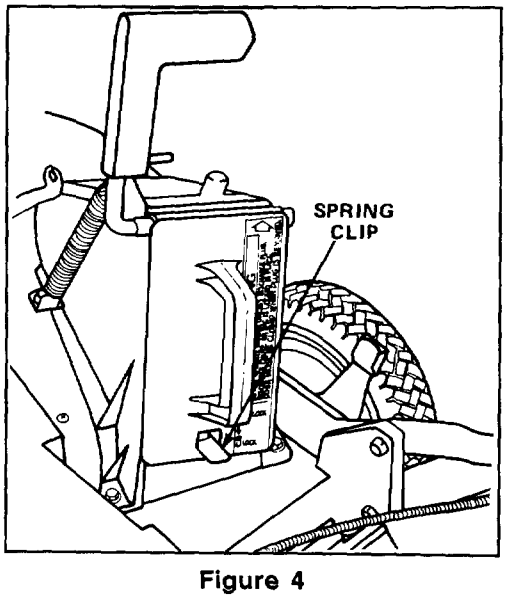

Figure 4

BEFORE OPERATING

FILL CRANKCASE WITH OIL

Initially, crankcase must be filled with 0.5 L (18 ounces) of SAE 10W30 oil. Use any high quality detergent oil having the American Petroleum Institute (API) "service classification"—MS, SC, SD, SE or SF.

Before each use, assure oil level is between ADD and FULL marks as shown on dipstick (Fig. 5). Add oil if level is low.

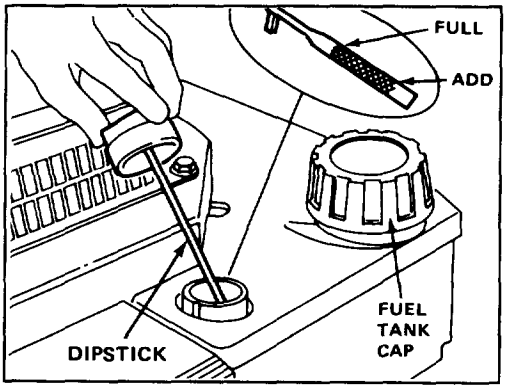

Figure 5

1. Position mower on level surface. Clean around oil dipstick.

2. Remove dipstick by rotating cap counterclockwise 1/4 turn.

3. Wipe dipstick and insert it into filler neck. Rotate cap 1/4 turn. Remove dipstick and check level of oil (Fig. 5). If level is low, add only enough oil to raise level to FULL mark on dipstick. **DO NOT FILL ABOVE FULL MARK BECAUSE ENGINE COULD BE DAMAGED WHEN STARTED. POUR OIL SLOWLY.**

Note: Check oil level each time mower is used or after every 5 hours of mower operation. Initially, change oil after the first 2 hours of operation; thereafter, change oil after every 25 hours of operation. More frequent oil changes are required in dusty or dirty conditions.

4. Insert dipstick into filler neck. Rotate cap clockwise 1/4 turn to lock it in place.

⚠ WARNING

DANGER: Gasoline is extremely flammable and explosive under certain conditions. Do not smoke when handling fuel and keep fuel far away from open flames and sparks. Never buy more than a 30 day supply of gasoline. Store it in an approved container. Keep gasoline out of reach of children.

Refuel outdoors and only when engine is cold. Do not fill tank full. Fill tank to within 1/4" to 1/2" (6 to 13 mm) from top of tank, not into filler neck. This space is for expansion of fuel. Use funnel or spout to prevent spilling. Wipe up any spilled gas.

FILL FUEL TANK WITH GASOLINE

Note: The Toro Company strongly recommends the use of fresh, clean, UNLEADED regular grade gasoline in Toro gasoline powered products. Unleaded gasoline burns cleaner, extends engine life, and promotes good starting by reducing the build-up of combustion chamber deposits. Leaded gasoline can be used if unleaded is not available.

Toro also recommends that Toro Stabilizer/Conditioner be used regularly in all Toro gasoline powered products during operation and storage seasons. Toro Stabilizer/Conditioner cleans the engine during operation. It also prevents gum-like varnish deposits from forming in the engine during periods of storage.

BEFORE OPERATING

1. Clean around fuel tank cap and remove cap from tank (Fig. 5). Using unleaded gasoline, fill fuel tank to within 1/4 to 1/2 inch (6 to13 mm) from top of tank, not into filler neck. This space is for expansion of fuel. Do not fill tank full.
2. Install fuel tank cap and wipe up any spilled gasoline.

IMPORTANT: DO NOT MIX OIL WITH THE GASOLINE. NEVER USE METHANOL, GASOLINE CONTAINING METHANOL, GASOHOL CONTAINING MORE THAN 10% ETHANOL, PREMIUM GASOLINE, OR WHITE GAS BECAUSE ENGINE FUEL SYSTEM DAMAGE COULD RESULT.

DO NOT USE FUEL ADDITIVES OTHER THAN THOSE MANUFACTURED FOR FUEL STABILIZATION DURING STORAGE SUCH AS TORO'S STABILIZER/CONDITIONER OR A SIMILAR PRODUCT. TORO'S STABILIZER/CONDITIONER IS A PETROLEUM DISTILLATE BASED CONDITIONER/STABILIZER. TORO DOES NOT RECOMMEND STABILIZERS WITH AN ALCOHOL BASE SUCH AS ETHANOL, METHANOL OR ISOPROPYL. ADDITIVES SHOULD NOT BE USED TO TRY TO ENHANCE THE POWER OR PERFORMANCE OF MACHINE.

RECYCLING

SPECIAL RECYCLER FEATURES

The Toro Recycler is a mower with a new and completely different cutting concept. It leaves your lawn with a bagged look without bagging clippings.

The Toro Recycler is equipped with special parts which increase your mower's ability to recycle grass clippings, leaves, and other yard debris down into the grass. These parts are:

A. A special blade and blade stiffener

B. Four special "kicker plates" positioned on the underside of the mower deck at strategic positions (Fig. 6)

C. A special plug which snaps into the mower's discharge tunnel (a fifth kicker is on the plug) (Fig. 7)

The blade and four kicker plates are permanent parts of your mower. The blade should be removed only for sharpening or replacement. The kickers should never be removed, unless they need to be replaced. They do not interfere with the normal bagging or optional side discharge operations of the mower.

The plug, however, is a removable part, just as the grass bag and optional side discharge chute are removable parts. You cannot use the plug in combination with either the grass bag or the side discharge chute. The plug is used only for recycling.

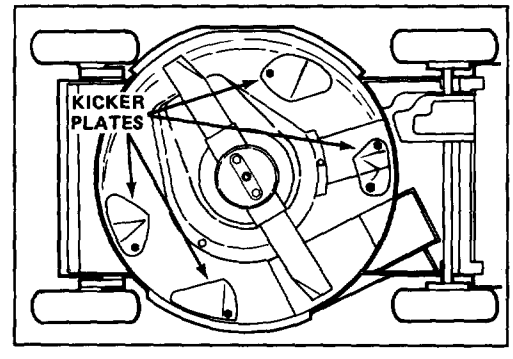

Figure 6

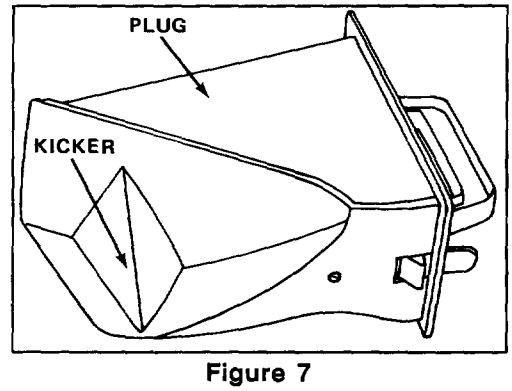

Figure 7

RECYCLING

Although the plug is used only for recycling, it is possible to mow without using the plug by closing the discharge tunnel door. However, your recycling will be much more effective if you use the plug. It has an additional kicker (Fig. 7) that helps drive the clippings down into the grass.

⚠ WARNING

Never start or operate the mower unless one of the following is true:

1. The Recycler plug is locked in place.

2. The bag is locked in place.

3. The side discharge chute is locked in place.

4. The discharge door is locked closed.

TIPS FOR RECYCLING GRASS CLIPPINGS

Even with the Recycler, you may encounter conditions where it is not possible to hide all of the recycled clippings or leaves all of the time down in the grass. Follow these instructions for the best recycling results and quality-of-cut:

- In the heat of the summer, it is generally best to cut grass at the C, D or E height-of-cut settings. Only about 1/3 of the grass blade should be cut. Cutting below the C setting is not recommended unless grass is sparse or it is late fall when grass growth begins to slow down. If long grass must be cut, you may need to use a higher height-of-cut setting and a slower walking speed. Then recut the grass at a more normal setting. If grass is too long and leaves clumps on top of lawn, mower may plug and cause engine to stall.

NOTE: When bagging, you can cut grass at any length.

- When cutting grass over 6" tall, you may want to cut the lawn twice to hide clippings down in the grass.
- Mow grass in dry conditions only. For safety reasons, never operate mower in wet grass. There is the possibility that you may slip on wet grass and that your foot might slide into the blade path.
- Maintain a sharp blade throughout the cutting season. Periodically file down nicks on blade.
- Clean any residue from the underside of mower housing, kickers, and plug after each use. See Cleaning Mower Housing, Discharge Tunnel, and Recycler Plug, page 17.
- Alternate mowing direction. This helps disperse clippings over lawn for even fertilization.

If the recycling quality-of-cut seems marginal, try one or more of the following:

- Raise the height-of-cut setting on your mower.
- Cut your grass more frequently.
- Walk at a slower pace.
- Overlap cutting swaths instead of cutting a full swath with each pass.
- Mow across the marginal areas a second time.
- Use the grass bag or optional side discharge chute

TIPS FOR RECYCLING LEAVES

You may recycle leaves in the fall instead of bagging. If you decide to bag, the Recycler reduces the number of leaf bags you will need by finely chopping up the leaves before bagging. Some leaf particles will be recycled back down into the soil. When spring arrives, the leaf particles will have decomposed and returned valuable nutrients to the soil.

RECYCLING

- Recycle your leaves when no more than 50% of the lawn shows through the leaf cover. If less than 50% of the lawn shows through the leaves, it is a good idea to bag.
- For light leaf coverage, recycle with all wheels at the same height-of-cut setting.
- If leaf cover is over 5", set the front wheels one or two notches higher than the rear wheels. This makes it easier to feed leaves under the mower deck.
- Walk at a slower ground speed if recycled leaves are not cut up finely enough to be hidden down in the grass.
- If you recycle a lot of oak leaves, you might want to add lime to your grass in the spring. Lime reduces the acidity of oak leaves.

OPERATING INSTRUCTIONS

GENERAL OPERATING TIPS

1. BEFORE EACH MOWING—Assure engine brake and control bar function properly. When control bar is released, blade and traction drive are designed to stop.

STARTING AND STOPPING

1. CONTROLS—Throttle, ground speed control, and blade/self-propelled control bar are on upper handle (Fig. 8). Fingertip starter is on top of engine (Fig. 9).

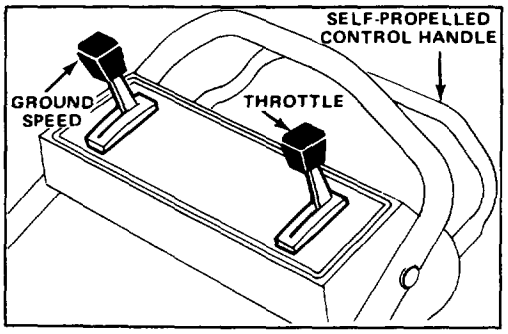

Figure 8

2. Push spark plug wire onto spark plug (Fig. 18).

3. STARTING—Move ground speed control to "N" and throttle to CHOKE. Pull fingertip starter (Fig. 9) until positive engagement results; then pull vigorously to start the engine. Regulate throttle (Fig. 8) as desired when engine starts.

4. GROUND SPEED (Fig. 8)—Move ground speed control to desired setting. Number "1" is slow, "2" is medium, and "3" is a fast walking pace. Move ground speed control to "N" when using the mower for trimming and whenever leaving mower.

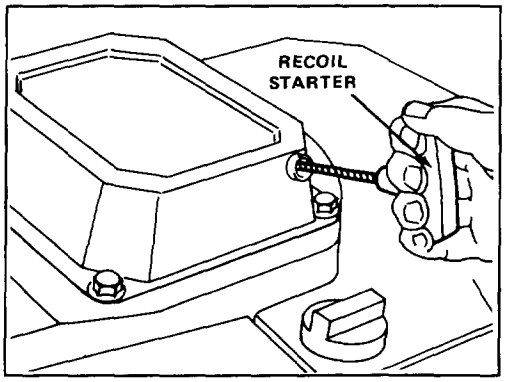

Figure 9

5. BLADE AND TRACTION OPERATION (Fig. 10)—Move control bar down to "A" and raise to engage blade "B". Move ground speed control to desired setting and squeeze control bar against handle "C" to drive. Ground speed varies, depending on space between control bar and handle. To disengage traction drive, but keep blade engaged, gradually release control bar to mid position. To self-propel with blade disengaged, simply squeeze control bar against handle, eliminating downward movement necessary for blade engagement.

OPERATING INSTRUCTIONS

Note: The drive wheels are equipped with freewheeling clutches which enable the mower to be pulled rearward easier when the wheel drive is disengaged. To disengage the clutches, mower must be pushed forward at least 1" after wheel drive operation has stopped.

6. STOPPING—Move throttle to "OFF" position. Pull wire off spark plug if mower will be unattended or not used.

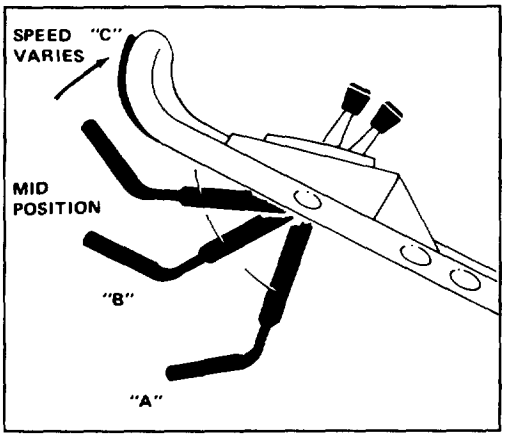

Figure 10

USING RECYCLING PLUG

1. Make sure engine is off. Open the discharge door by pulling forward on the handle and moving it rearwards (Fig. 11). Hold the discharge door handle to prevent the spring-loaded door from closing while inserting the plug.

2. Since the plug is slightly wider than the discharge tunnel opening, you must rotate the plug clockwise slightly while inserting it (Fig. 11). Make sure the arrow on the plug decal is pointing upwards.

3. Push the plug all the way in until the spring clip on the bottom of the plug clicks into place, locking the plug securely into the discharge tunnel (Fig. 12). Release discharge door handle to lock top of plug.

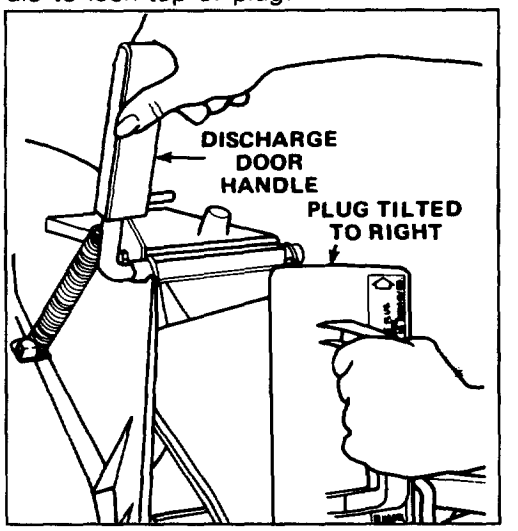

Figure 11

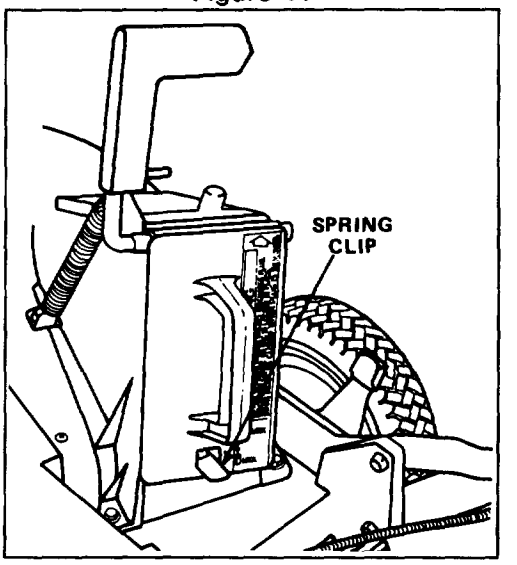

Figure 12

4. To remove the plug, move the discharge door handle rearwards while at the same time lift up the spring clip on the bottom of the plug. When the plug is unlocked, pull it out of the discharge tunnel.

OPERATING INSTRUCTIONS

Note: When grass is thick and lush, clippings may collect on and around the Recycler plug. This may make plug removal difficult. Clean Recycler plug thoroughly after each use. Refer to Cleaning Mower Housing, Discharge Tunnel and Recycler Plug, page 17.

USING GRASS BAG

Occasionally you may wish to use the grass bag for bagging extra long grass, lush grass or leaves.

1. Stop engine and wait for all parts to stop.
2. Assure discharge door handle is fully forward and pin is engaged in catch (Fig. 13).
3. INSTALLING BAG—Slide hole in bag frame onto retaining post on discharge tunnel (Fig. 13) and set rear of bag frame onto lower handle.

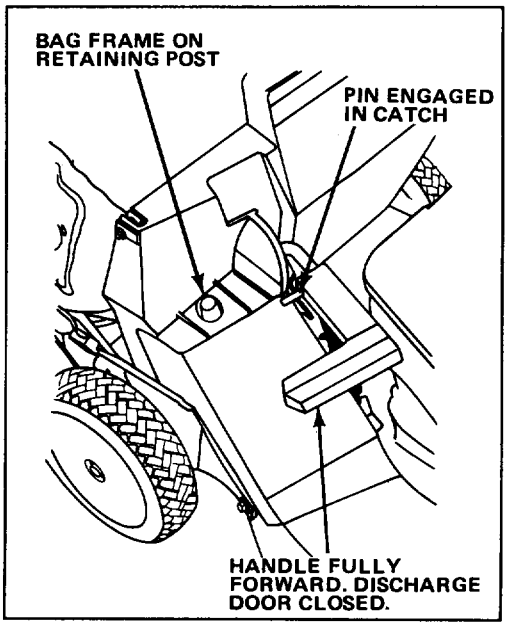

Figure 13

4. Pull discharge door handle forward until pin clears catch and move handle rearward until pin locks in bag notch (Fig. 14). Discharge door in mower housing is now open.

⚠ CAUTION

Except when grass bag, side discharge attachment or Recycler discharge plug is used, never open discharge door on mower when engine is running because grass clippings and other debris discharges with enough force to cause injury.

The grass bag material will catch and contain the majority of foreign objects such as small stones and other similar debris. The bag material, however, is subject to normal wear and deterioration. So check the bag frequently, and if it is worn, install a new genuine TORO replacement bag that has this or similar warning.

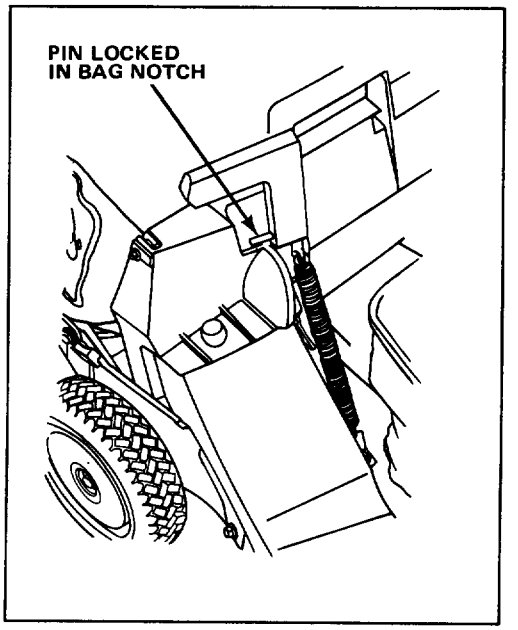

Figure 14

4. EMPTYING BAG—Stop engine and wait for all parts to stop. Raise discharge door handle and move it forward to engage the locking pin with catch (Fig. 13). Grasp handles at front and rear of bag and lift bag off mower. Gradually tip bag forward to empty clippings.

5. To reinstall bag, repeat steps 3-4.

⚠ CAUTION

If discharge door cannot be closed because grass clippings clog discharge area, turn engine off and gently move discharge door handle back and forth until door can be closed completely. Do not force discharge door closed because door or handle may be damaged. If door still cannot be closed, remove obstruction.

ADJUSTING HEIGHT-OF-CUT (Fig. 15)

Five letters cast into the housing represent each graduated height-of-cut setting.

1. Stop the engine and wait for all moving parts to stop.

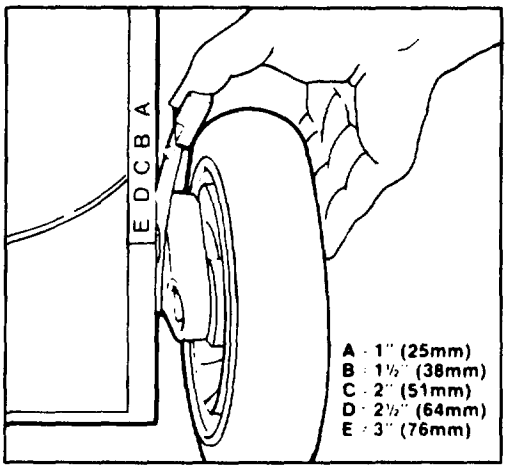

Figure 15

2. For easier adjustment, lift housing up so wheel is off ground. **Do not put fingers under housing when lifting.** Squeeze adjusting lever toward wheel and move to desired setting. Assure pin on adjusting lever locks into slot in housing. Adjust all wheels to the same setting.

Note: Front wheels can be adjusted to 1/2 inch. Move adjusting lever past "A" and release pin into slot in housing.

CHECK CONTROL BAR OPERATION

Control bar should be checked before each use to assure the Blade Brake Clutch (BBC) system is operating properly.

1. Install grass bag on mower; refer to Using Grass Bag, page 10.

2. Start engine; refer to Starting, page 8.

3. Push the control bar down to the lowest position (Fig. 16). This "cocks" the mechanism prior to engaging the blade.

4. Lift the control bar to the normal "blade engaged" position, about 1" below the handle (Fig. 16). The "fan" noise and bag inflation indicate that the mower blade is engaged and rotating.

5. Release the control bar. A "bang" should be heard, and the blade should stop within 3 seconds. If the blade does not stop within 3 seconds after the control bar is released, stop using mower until it has been serviced by an Authorized TORO Service Dealer.

6. If your unit stops within the required 3 seconds, the BBC system is operating properly. However, to detect the BBC system deterioration before it affects normal operation, proceed to step 6.

OPERATING INSTRUCTIONS

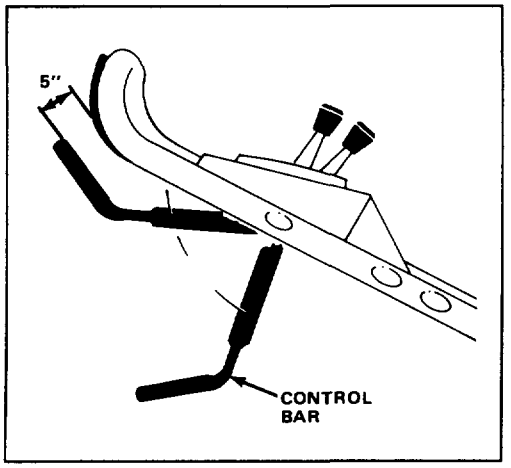

Figure 16

6. Start engine if not already running.
7. Push the control bar down to its lowest position, cocking the mechanism (Fig. 16).
8. Slowly lift the control bar to a point where the bag just begins to inflate (about 5" below the handle). This indicates that the mower blade is engaged and has begun to rotate.

Note: This intermediate position is not the "natural" operating position of the control bar. However, it has proven to be useful in early detection of latent BBC sticking which could create an unsafe condition later in the life of the mower.

9. Release the control bar.

Note: If a "bang" is heard and the bag immediately deflates, the control bar had been raised too far. Repeat steps 6, 7 & 8, but do not raise the handle as high as in step 8.

If the control bar "hangs up" and the blade does not quickly stop, it indicates possible deterioration has set in, which could result in an unsafe operating condition. Have mower inspected by an Authorized TORO Service Dealer.

CAUTION: If the control bar "hangs up", and the blade does not stop quickly, you should stop the blade before shutting off the engine. This can be done by raising the control bar to the normal operating position and releasing it.

MAINTENANCE

⚠ CAUTION

Pull wire off spark plug before performing adjustments or maintenance.

SERVICING AIR CLEANER

Normally, clean air cleaner after every 25 operating hours. Clean air cleaner more frequently when operating mower in dusty or dirty conditions.

1. Stop engine and pull wire off spark plug (Fig. 18).
2. Push in locking tabs and lift off air cleaner cover. Clean cover thoroughly (Fig. 17).
3. If top of foam element is dirty, remove it from air cleaner body (Fig. 17). Clean thoroughly.

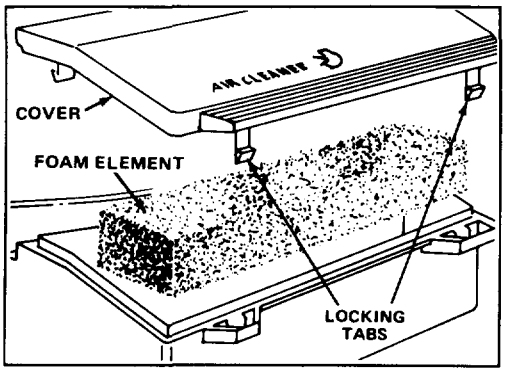

Figure 17

A. WASH foam element in a solution of liquid soap and warm water. Squeeze to remove dirt, but do not twist because foam may tear. Rinse thoroughly in clear water.
B. DRY by wrapping in a clean rag. Squeeze rag and foam element to dry.

C. SATURATE element with 5 teaspoons (25 ml) of SAE 10W30 engine oil. Squeeze element to remove excess oil and to distribute oil thoroughly. A damp element is desirable.

4. Reinstall foam element and air cleaner cover.

IMPORTANT: Do not operate engine without air cleaner element because extreme engine wear and damage will likely result.

REPLACING SPARK PLUG

Use an NGK BPR6ES spark plug or equivalent. Correct air gap is 0.032" (0.8 mm). Remove plug after every 25 operating hours and check its condition.

1. Stop engine and pull wire off spark plug (Fig. 18).

2. Clean around spark plug and remove plug from cylinder head.

IMPORTANT: Replace a cracked, fouled or dirty spark plug. Do not sand blast, scrape or clean electrodes because engine damage could result from grit entering cylinder.

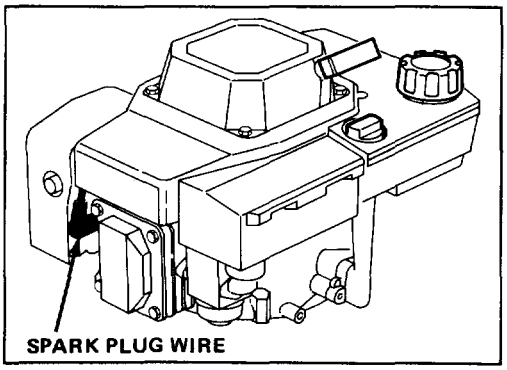

Figure 18

3. Set air gap at 0.032" (0.8 mm) (Fig. 19). Install correctly gapped spark plug and gasket seal. Tighten plug firmly to 15 ft-lb (20.4 N·m).

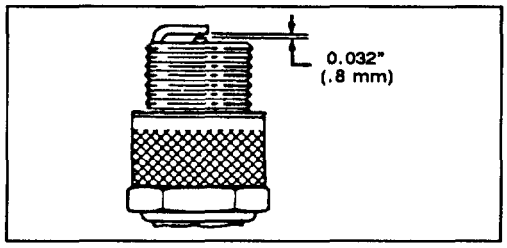

Figure 19

DRAINING GASOLINE

1. Stop engine and wait for engine to cool. Pull wire off spark plug (Fig. 18).

⚠ CAUTION

Drain gasoline from a cold engine only.

2. Remove cap from fuel tank and use a pump-type syphon to drain fuel into a clean gas can.

Note: This is the only procedure recommended for draining fuel.

CHANGING CRANKCASE OIL

Change oil after the first 2 operating hours and after every 25 hours thereafter. Since warm oil drains better and carries more contaminants than cold, run engine for a minute or so before draining oil.

1. Stop engine. Pull wire off spark plug (Fig. 18).

2. Remove grass bag. Drain gasoline from fuel tank: refer to Draining Gasoline, page 13.

3. Raise left side of mower at least 12 inches (Fig. 20). Remove drain plug using a 14mm or 9/16" wrench. Place a drain pan at left side of mower.

4. Insert oil drain tube over drain opening. Lower mower to allow oil to drain into pan. Raise right side of mower until all oil has flowed into drain pan.

MAINTENANCE

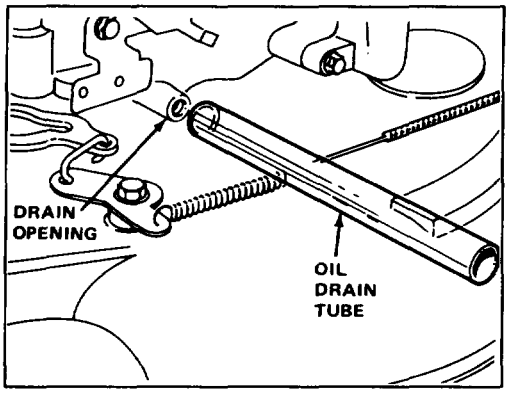

Figure 20

5. After draining, clean drain plug and reinstall it. Fill engine with fresh oil: refer to Fill Crankcase With Oil, page 5.

ADJUSTING THROTTLE

Throttle control adjustment may be required if engine does not start or stop. Whenever a new throttle control cable is installed, throttle must be adjusted.

1. Stop engine and pull wire off spark plug (Fig. 18).
2. If necessary, remove grass bag.
3. Move throttle control to FAST position.
4. Loosen cable clamp screw until throttle cable slides (Fig. 21). Align holes in throttle lever and throttle bracket. Pull throttle cable slightly to remove any slack and tighten cable clamp screw to lock adjustment in place.

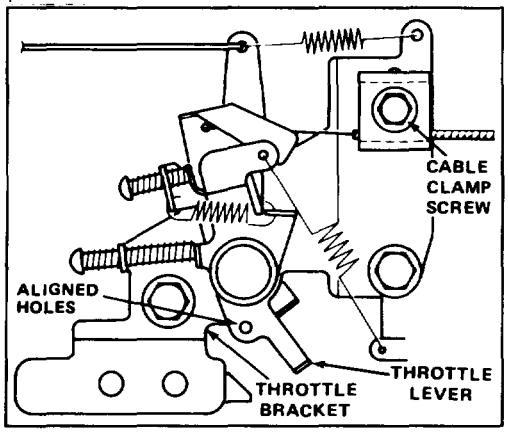

Figure 21

ADJUSTING WHEEL TRACTION DRIVE

If mower does not self-propel or has a tendency to creep forward when drive is not engaged, adjust wheel drive control knob on rear of gear box.

1. If necessary, remove grass bag.

⚠ WARNING

Keep hands away from underside of mower housing while making adjustment.

2. ADJUSTMENT (Fig. 22)—Rotate control knob clockwise 1/2 turn if mower does not self-propel. If mower creeps forward, rotate knob 1/2 turn counterclockwise to loosen belt.

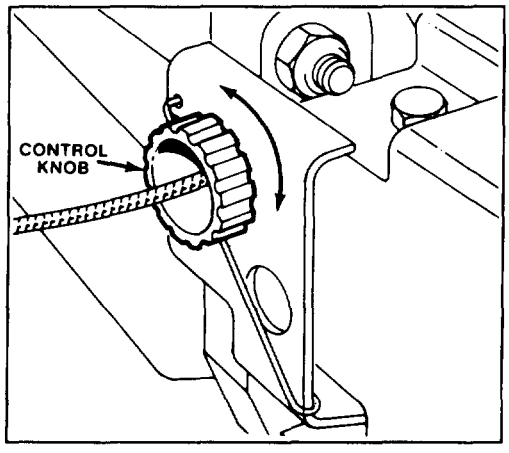

Figure 22

3. CHECK ADJUSTMENT—Slowly pull mower backwards while control bar is gradually moved toward handle. Adjustment is correct when rear wheels stop turning and control bar is about 1 inch from handle (Fig. 23).
4. Repeat steps 2 and 3 until properly adjusted.

MAINTENANCE

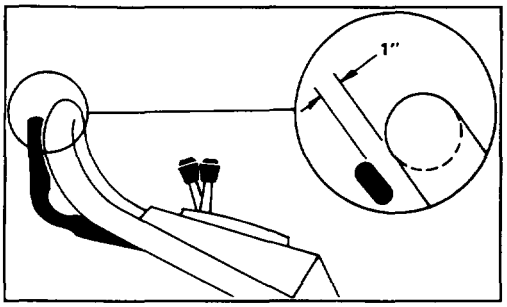

Figure 23

INSPECTING/REMOVING/SHARPENING BLADE

Always mow with a sharp blade. A sharp blade cuts cleanly and without tearing or shredding the grass blades like a dull blade.

1. Stop engine and pull wire off spark plug (Fig. 18).

2. Drain gasoline from fuel tank; refer to Draining Gasoline, page 13.

3. Tip mower on its right side (Fig. 24). Avoid rotating the blade because starting problems may result.

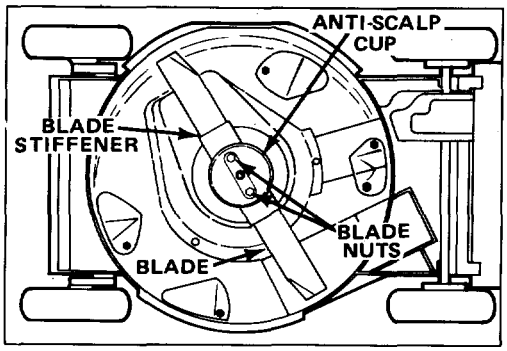

Figure 24

4. INSPECTING BLADE—Carefully examine blade for sharpness and wear, especially where flat and curved parts meet (Fig. 25A). Since sand and abrasive material can wear away the metal that connects the flat and curved parts of the blade, check blade before using the mower. If a slot or wear is noticed, (Fig. 25B & C), replace blade. Refer to step 5.

Note: For optimum performance, install new blade before cutting season begins. During the year, file down small nicks to maintain the cutting edge.

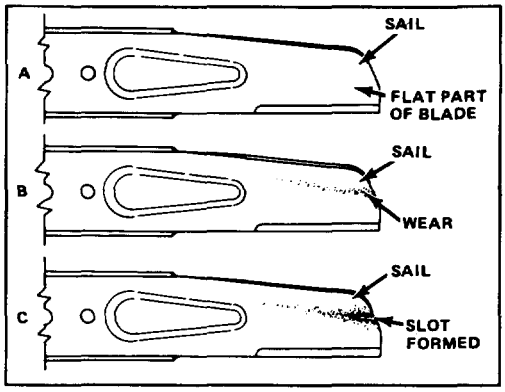

Figure 25

WARNING

If blade is allowed to wear, a slot may form near the sail. Eventually a piece of blade may break off resulting in serious injury to yourself or a bystander.

5. REMOVING BLADE—Grasp end of blade using a rag or thickly padded glove. Remove (2) blade nuts, anti-scalp cup, blade stiffener, and blade (Fig. 24).

6. SHARPENING BLADE—Using a file, sharpen top side of blade and maintain original cutting angle (Fig. 26). The blade will remain balanced if same amount of material is removed from both cutting edges.

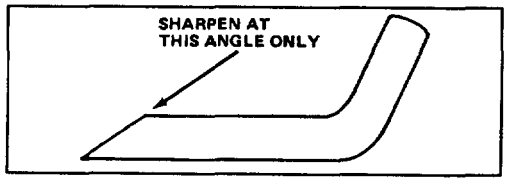

Figure 26

IMPORTANT: Check balance of blade by putting it on a blade balancer. An inexpensive balancer can be purchased at a hardware store. A balanced blade stays in a horizontal position and an unbalanced blade settles to the heavy side. If blade is not balanced, file more metal off cutting edge on heavy end of blade.

7. Reinstall sharp, balanced blade, blade stiffener, anti-scalp cup, and (2) blade nuts. Sail part of blade must point toward top of mower housing to assure correct installation. Tighten blade nuts to 50 ft-lb (68 N·m).

LUBRICATION

After every 25 operating hours or when season ends, front and rear wheels must be lubricated.

1. Apply 2 or 3 drops of light oil on inside and outside of all wheel bolts. Spin wheels to distribute oil into bushings. Wipe up excess oil.

2. Move rear wheel height-of-cut levers to "C" setting. Wipe grease fittings with clean rag (Fig. 27). Install grease gun onto fitting and gently apply 1 or 2 pumps of #2 Multi-Purpose Lithium Base Grease.

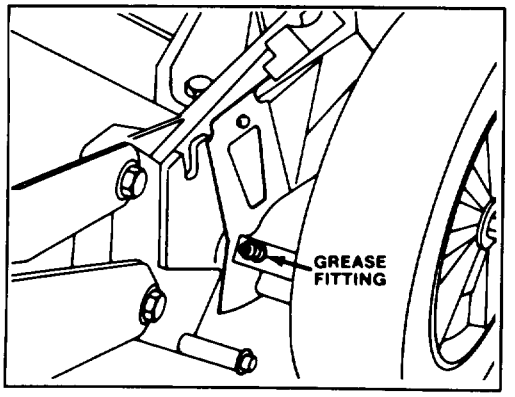

Figure 27

ADJUSTING BLADE BRAKE

Whenever a new blade brake cable assembly is installed, an adjustment is required.

1. Stop engine and pull wire off spark plug (Fig. 18).

2. Loosen cable clamp screw until brake cable conduit slides (Fig. 28). Pull cable to remove slack, but do not put tension on spring. Tighten screw to lock adjustment in place.

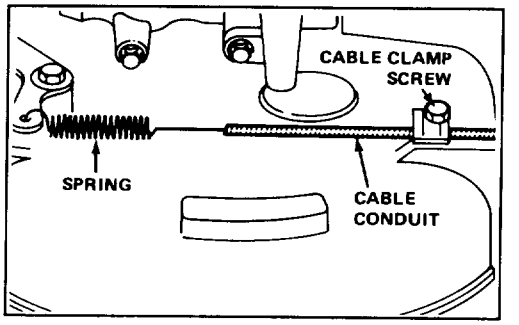

Figure 28

ADJUSTING GROUND SPEED CONTROL FOR NEUTRAL

Whenever a new ground speed control cable is installed or if mower drives when ground speed control is in "N", an adjustment is required.

1. Stop engine and remove grass bag.

2. Remove two capscrews and lift off transmission cover (Fig. 29).

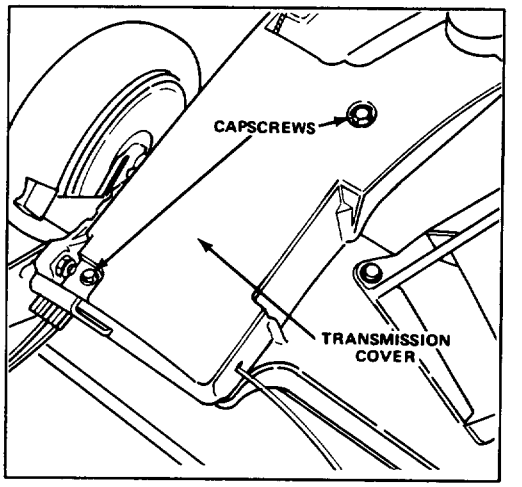

Figure 29

3. ADJUSTMENT (Fig. 30)—Loosen cable clamp screw until cable conduit slides. Move ground speed control to "N" position. Push transmission control lever toward stop until you feel a "snap". The transmission control lever should be close to the stop when the snap is felt. Pull cable to remove any slack and tighten cable clamp screw.

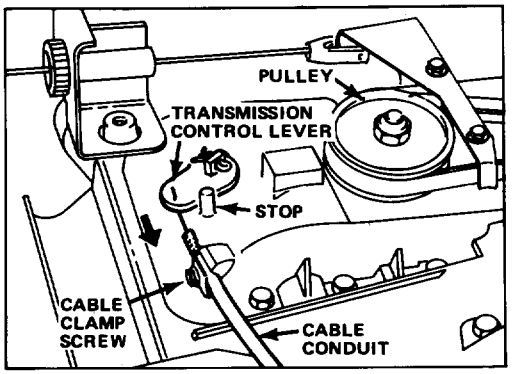

Figure 30

4. CHECK ADJUSTMENT—Assure ground speed control is in "N" and pull mower backward. Pulley (Fig. 30) should not rotate. If pulley does rotate, readjust for neutral: refer to step 3.

5. Reinstall transmission cover and grass bag.

CLEANING BLADE BRAKE CLUTCH SHIELD

The BBC (Blade Brake Clutch) shield should be cleaned periodically, at the end of each mowing season at minimum. This will assure the best performance and help prevent parts deterioration.

1. Stop engine. Pull wire off spark plug (Fig. 18).

2. Drain gasoline from fuel tank; refer to Draining Gasoline, page 13.

3. Tip mower on its right side.

4. Remove (2) blade nuts, anti-scalp cup, blade stiffener, blade, and (3) bolts and washers securing BBC shield to mower deck (Fig. 31).

5. Brush or blow debris from inside of shield.

6. Reinstall BBC shield with (3) bolts and washers, blade, blade stiffener, anti-scalp cup, and (2) blade nuts.

7. Replace spark plug wire.

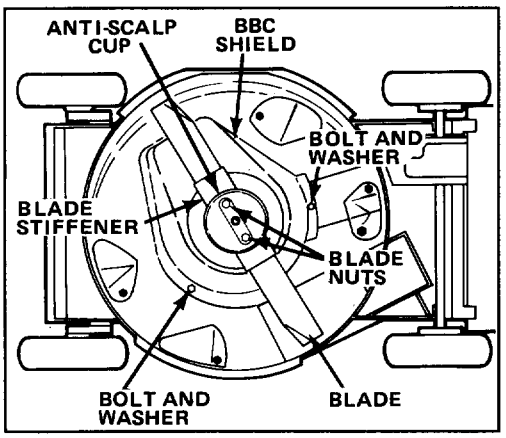

Figure 31

CLEANING MOWER HOUSING, DISCHARGE TUNNEL, AND RECYCLER PLUG

To assure best performance, the Recycler plug must be cleaned after each use. When grass is thick and lush, clippings may collect on and around the Recycler plug; this may make plug removal difficult. Remove plug from discharge tunnel and clean off all debris.

Keep underside of mower housing clean. Be especially careful to keep kickers on underside of mower housing free of debris (Fig. 32).

MAINTENANCE

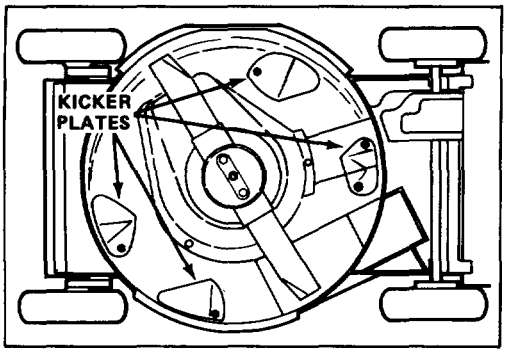

Figure 32

Always be sure that discharge tunnel door locks closed when handle is released. If debris prevents discharge door from locking closed, clean inside of discharge tunnel and door thoroughly.

⚠ WARNING

Never start or operate the mower unless one of the following is true:

1. The Recycler plug is locked in place.

2. The bag is locked in place.

3. The side discharge chute is locked in place.

4. The discharge door is locked closed.

1. Stop engine. Wait for all moving parts to stop. Pull wire off spark plug (Fig. 18).
2. Drain gasoline from fuel tank: refer to Draining Gasoline, page 13.
3. Tip mower on its right side (Fig. 32). Avoid rotating blade because starting problems may result.
4. Remove dirt and grass clippings that stick to housing. Spray housing with a garden hose. Scrape out remaining debris with hardwood scraper. Avoid burrs and sharp edges.
5. Turn mower upright.
6. Remove debris from inside of discharge tunnel.
7. Clean Recycler plug.

PREPARING MOWER FOR STORAGE

1. For long term storage, either drain gasoline from fuel tank or use a fuel additive before storing. To drain gasoline, refer to Draining Gasoline, page 13. After fuel is drained, start engine and let it idle until all fuel is consumed and engine stops. Repeat the starting procedure two more times to assure all gas is removed from the engine. If gasoline is not drained, gum-like varnish deposits will form and cause poor engine operation, even starting problems.

Fuel can be left in gas tank only if a fuel additive, such as Toro's Stabilizer/Conditioner, is added to gasoline and run through engine before storing. Toro's Stabilizer/Conditioner is a petroleum distillate based conditioner/stabilizer. Toro does not recommend stabilizers with an alcohol base, such as ethanol, methanol or isopropyl. Use fuel additive in recommended quantities as specified on container.

Under normal conditions, all fuel additives remain effective in fuel for 6–8 months.

2. Drain oil: refer to Changing Crankcase Oil, page 13. After oil is drained, do not fill crankcase with oil until the following steps (3–11) are completed.
3. Remove spark plug and pour 2 tablespoons of SAE 10W30 oil into hole in cylinder. Pull starter rope slowly to coat inside of cylinder. Install spark plug and tighten to 15 ft–lb (20.4 N·m). **DO NOT INSTALL WIRE ON SPARK PLUG.**
4. Clean mower housing, discharge tunnel and Recycler plug: refer to Cleaning Mower Housing, Discharge Tunnel, and Recycler Plug, page 17.
5. Clean BBC shield: refer to Cleaning Blade Brake Clutch Shield, page 17.

MAINTENANCE

6. Check condition of blade: refer to Inspecting/Removing/Sharpening Blade, page 15.

7. Tighten all nuts, bolts, and screws.

8. Clean dirt and chaff from cylinder, cylinder head fins, and blower housing. Also remove grass clippings, dirt, and grime from external parts of the engine, shrouding, and top of mower housing.

9. Clean air cleaner: refer to Servicing Air Cleaner, page 12.

10. Lubricate the wheels: refer to Lubrication, page 16.

11. Touch up all rusted or chipped paint surfaces. Toro Re-Kote paint is available from an Authorized TORO Service Dealer.

12. Store mower in a clean, dry place. Cover mower to keep it clean and protected.

OPTIONAL EQUIPMENT

For special conditions the following accessories may be purchased at your local authorized TORO Service Dealer.

1. Side Discharge Kit, Model No. 59168—Installs in seconds. Rear mounted in place of the grass bag or discharge plug. Disperses clippings while trimming on both sides (Fig. 33).

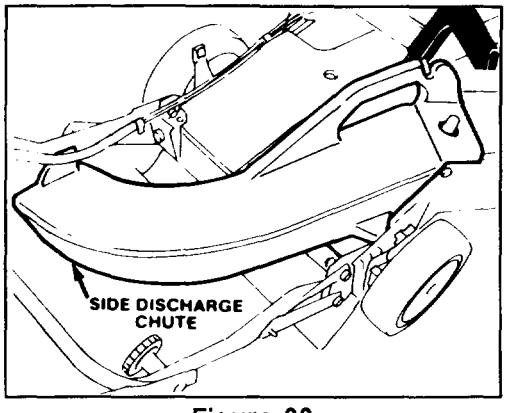

Figure 33

2. Dethatcher Kit, Model No. 59131—Installs in minutes. Front mounted for easy maneuverability. Spring tines loosen thatch for recycling or clean vacuuming into grass bag (Fig. 34).

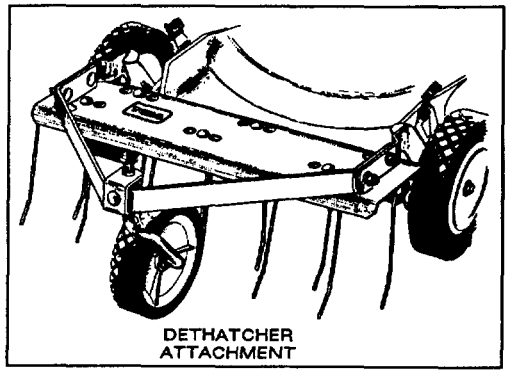

Figure 34

3. Spark Arrestor (Part # 56-6730)—If a spark arrestor is required because of local, state or federal regulations, it may be purchased at your local Authorized TORO Service Dealer. If mower is operated on any California forest, brush or grass covered land without a properly operating spark arrestor, the operator is violating state law, Section 4442 Public Resources Code.

TORO SERVICE SUPPORT

If help - concerning safety, set-up, operation, maintenance, or troubleshooting - is ever needed, contact the local Authorized TORO Service Dealer or Distributor. Refer to the "Yellow Pages" for assistance. In addition to skilled service technicians, the dealer and distributor have factory approved accessories and replacement parts. Keep your Toro all TORO. Buy genuine TORO replacement parts and accessories.

PRODUCT IDENTIFICATION

A model and a serial number decal is located on the underside of the control panel. Always refer to specific numbers on this decal in correspondence or when replacement parts are needed.

It is Toro's policy to design and produce high quality products. To ensure customer satisfaction, Toro has extensive warranty coverage on its products. Your TORO GTS Engine powered product has two warranty statements covering it. The Toro Promise is our standard warranty statement and is printed on the last page of this manual.

In addition to The Toro Promise, we are so confident that the TORO GTS Engine will provide a high level of performance and durability that we are providing a *Starting Guarantee!* Please read the details of this additional warranty coverage printed below.

THE TORO STARTING GUARANTEE

A Five Year Limited Warranty On All Toro GTS Engines

What Is Covered?

The Toro Company guarantees that your TORO GTS Engine will start on the first or second pull for five years from the date of purchase—if you provide the routine maintenance it requires—or we will fix it. The cost of parts and labor are included, but you must pay transportation costs. This covers TORO GTS rotary mower engines purchased after September 1, 1988, and TORO GTS snow engines (Models 38180 and 38185) purchased after August 31, 1989.

What Must You Do To Keep The Warranty In Effect?

You must maintain your TORO GTS Engine by following the maintenance schedule detailed in the operator's manual, at your expense. You must record this work in the maintenance chart provided in your owner's manual and keep your proof of purchase.

How Do You Get Service?

If the starting performance of your TORO GTS Engine should diminish to the point where it will not start in one or two pulls by a normal, able-bodied adult, you should follow the procedures below:

1. Contact any Authorized TORO Service Dealer, TORO Master Service Dealer, or TORO Distributor (the Yellow Pages of your telephone directory is a good reference source).
2. He will either instruct you to return the product to him or recommend another Authorized TORO Service outlet which might be more convenient.
3. Bring the product, your maintenance records, and proof of purchase to the Service Dealer.

If, for any reason, you are dissatisfied with the Dealer's analysis of your engine's starting condition, or the assistance provided, please feel free to contact us:

TORO Customer Service Department
8111 Lyndale Avenue South
Minneapolis, Minnesota 55420

What Does This Warranty Not Cover?

This Warranty does not cover:

1. Any repairs on products used commercially.
2. Normal maintenance including replacement of spark plugs, air filter, fuel filter, and carburetor adjustments.
3. Oil change and lubrication.
4. Repairs or adjustments due to:
   a. Failure to follow proper maintenance procedures;
   b. Rotary mower blade striking an object;
   c. Contaminants in the fuel system;
   d. Improper fuel or fuel mixture (consult your owner's manual if in doubt);
   e. Failure to drain the fuel system prior to any period of non-use over three months;
   f. Operation misuse, neglect or accidents;
   g. Repairs or attempted repairs by anyone other than an Authorized TORO Service Dealer.
5. Special operational conditions where starting may require more than two pulls, including:
   a. First time starts after extended period of non-use or seasonal storage;
   b. Cool temperature starts such as those found in early spring and late fall may require an additional pull or two (applies to rotary products only);
   c. Improper starting procedures. If you are having difficulty starting your unit, please check the operator's manual to ensure you are using the correct starting procedures. This can save an unnecessary visit to a Service Dealer.

All warranty repairs reimbursable under this warranty must be performed by an Authorized TORO Service Dealer using Toro approved replacement parts.

The above remedy through repair by an Authorized TORO Service Dealer is the purchaser's sole remedy.

How Does State Law Relate To This Warranty?

There is no other express warranty except for The Toro Promise. All implied warranties of merchantability (that the product is fit for ordinary use) and fitness for use (that the product is fit for a particular purpose) are limited to the duration of the express warranty.

Some states do not allow limitation on how long implied warranties last, so the above exclusion may not apply to you.

The Toro Company is not liable for indirect, incidental or consequential damages in connection with the use of the product, including any cost or expense of providing substitute equipment or service during periods of malfunction or non-use.

Some states do not allow exclusions of incidental or consequential damages, so the above exclusion may not apply to you.

This warranty gives you specific legal rights, and you may also have other rights which vary from state to state.

GUARANTEED TO START MAINTENANCE RECORD

To keep the starting guarantee in effect, you must perform the following maintenance after every 25 operating hours, more often in dusty and dirty conditions. Follow the procedures in this Operator's Manual and record information on this chart.

Date	Hours Used	Service Air Cleaner	Change Oil Doesn't apply to 2-Cycle	Lubricate Wheels	Check Spark Plug	Mower Storage

The Toro Promise

A Two Year Limited Warranty
On All
Gasoline Powered Consumer Products

The Toro Company promises to repair these TORO Products if defective in materials or workmanship. The following time periods from the date of purchase apply:

Residential Product ..... 2 Years
Residential Products Used Commercially ..... 45 Days

The cost of parts and labor are included, but the customer pays the transportation costs. Just return any residential product to an Authorized TORO Service Dealer or TORO Distributor.

Should you feel your TORO Product is defective and wish to rely on The Toro Promise, the following procedure is recommended:

1. Contact any Authorized TORO Service Dealer, TORO Master Service Dealer, or TORO Distributor (the Yellow Pages of your telephone directory is a good reference source).
2. He will either instruct you to return the product to him or recommend another Authorized TORO Service outlet which might be more convenient.
3. Bring the product along with your original sales slip, or other evidence of purchase date, to the service dealer.
4. The servicing dealer will inspect the unit, advise you whether the product is defective and, if so, make all repairs necessary to correct the defect without extra charge to you.

If for any reason you are dissatisfied with the dealer's analysis of the defect or the service performed, you may contact us.

Write: TORO Customer Service Dept.
8111 Lyndale Avenue South
Minneapolis, MN 55420

The above remedy of product defects through repair by an Authorized TORO Service Dealer is the purchaser's sole remedy for any defect.

THERE IS NO OTHER EXPRESS WARRANTY EXCEPT FOR THE TORO STARTING GUARANTEE ON THE GTS ENGINE. ALL IMPLIED WARRANTIES OF MERCHANTIBILITY AND FITNESS FOR USE ARE LIMITED TO THE DURATION OF THE EXPRESS WARRANTY.

Some states do not allow limitations on how long implied warranty lasts, so the above limitation may not apply to you.

This Warranty applies only to parts or components which are defective and does not cover repairs necessary due to normal wear, misuse, accidents, or lack of proper maintenance. Regular, routine maintenance of the unit to keep it in proper operating condition is the responsibility of the owner.

All warranty repairs reimbursable under The Toro Promise must be performed by an Authorized Toro Service Dealer using Toro approved replacement parts.

Repairs or attempted repairs by anyone other than an Authorized TORO Service Dealer are not reimbursable under the TORO Promise. In addition, these unauthorized repair attempts may result in additional malfunctions, the correction of which is not covered by warranty.

THE TORO COMPANY IS NOT LIABLE FOR INDIRECT OR CONSEQUENTIAL DAMAGES IN CONNECTION WITH THE USE OF THE PRODUCT INCLUDING ANY COST OR EXPENSE OF PROVIDING SUBSTITUTE EQUIPMENT OR SERVICE DURING PERIODS OF MALFUNCTION OR NON-USE.

Some states do not allow the exclusion of incidental or consequential damages, so the above exclusion may not apply to you.

This warranty gives you specific legal rights, and you may also have other rights which vary from state to state.

COUNTRIES OTHER THAN THE UNITED STATES OR CANADA

Customers who have purchased TORO products exported from the United States or Canada should contact their TORO Distributor (Dealer) to obtain guarantee policies for your country, province, or state. If for any reason you are dissatisfied with your Distributor's service or have difficulty obtaining guarantee information, contact the TORO importer. If all other remedies fail, you may contact us at The Toro Company.