FORM NO. 3314−375 Rev. A

TORO®

Part No. 82-8800

INSTALLATION INSTRUCTIONS

BAFFLE KIT

for use on 62" Cutting Units, Models 30564 & 30162

1. Using the dimensions shown in (Fig. 1), locate mark and drill (6) .344 dia. holes in front of deck.

2. Loosely secure the right and left baffles to inside of deck with capscrews and locknuts, positioning them as shown in (Fig. 2).

3. Adjust baffles to desired height and tighten mounting fasteners.

NOTE: make sure baffles are level and not bent. A bent baffle could affect the quality of cut.

CAUTION: If baffles are removed from deck, plug mounting holes with capscrews removed.

NOTE: The baffle kit is useful in the collection of leaves, debris and other dry materials and it reduces the amount of dry debris and dust dispersed from front of deck.

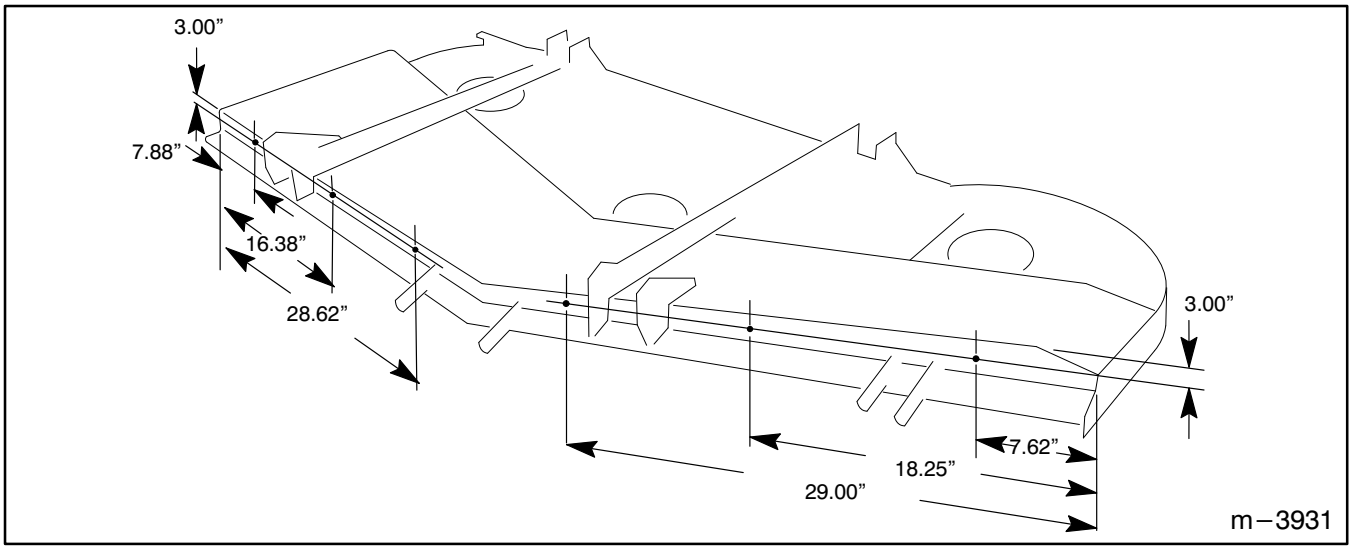

Figure 1

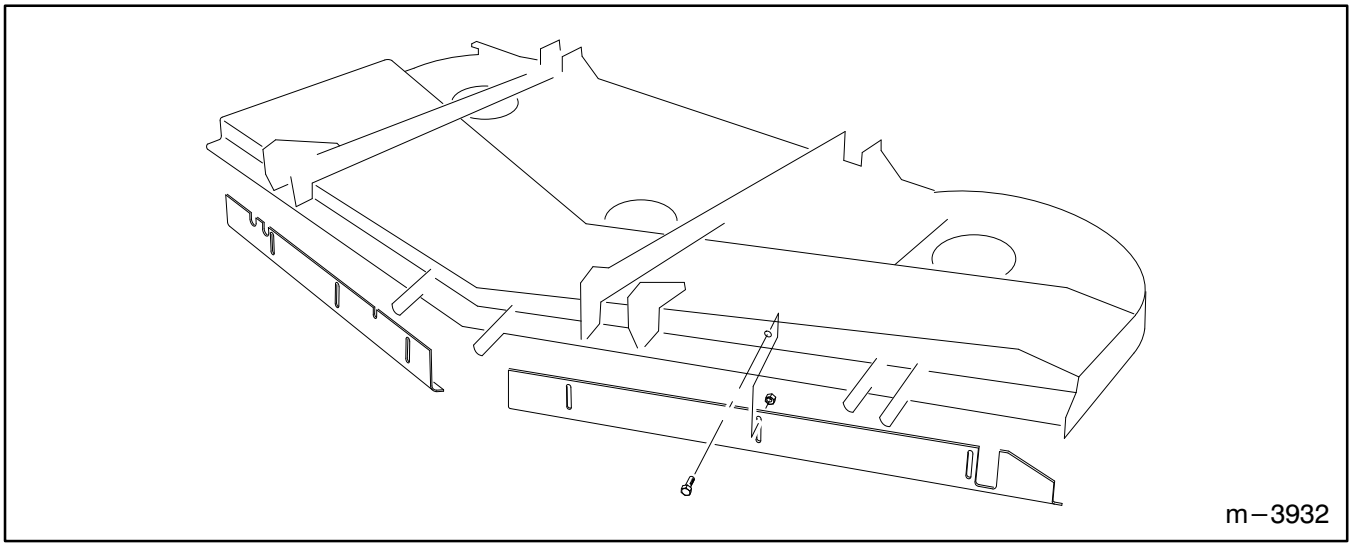

Figure 2

© The TORO Company − 1990