Greensmaster® 3150 2-Wheel Drive Traction Unit

Model No. 04358—Serial No. 314000001 and Up

Electrical Schematic

Schematic—Electrical

Model 04358

Sheet 1 of 1 | DWG 115-5301 | Rev D

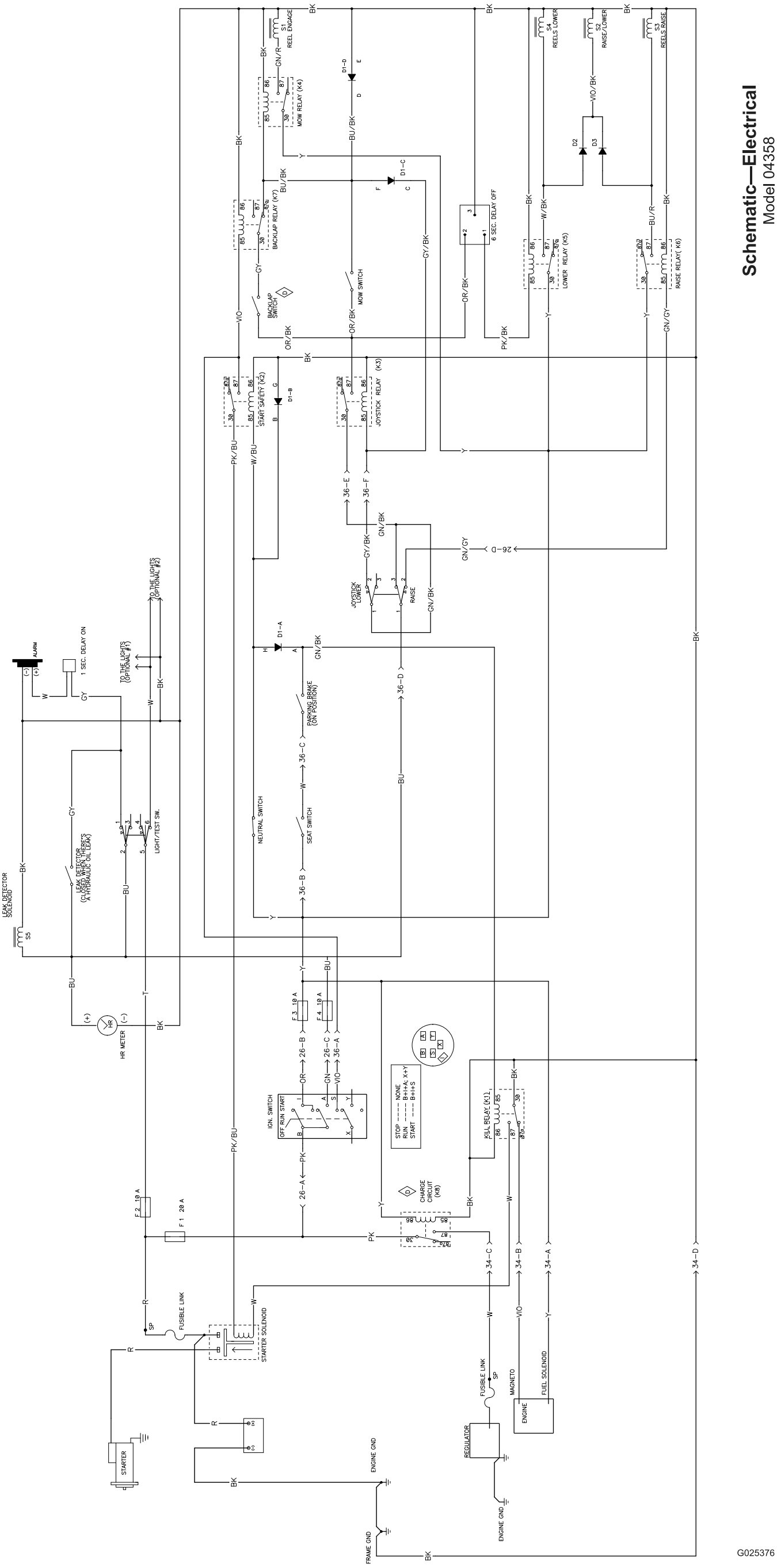

©2014—The Toro® Company, 8111 Lyndale Avenue South, Bloomington, MN 55420