FORM NO. 3314-391

TORO®

MODEL NO. 30788 — 10431 & UP
MODEL NO. 30739 — 10001 & UP

OPERATOR'S MANUAL

GROUNDSMASTER® 322-D

WITH POWER STEERING

TORO®
THIS UNIT CONFORMS TO ANSI B71.4 - 1984

The GROUNDSMASTER 322-D conforms to the American National Standards Institute's safety standards for riding mowers; thus, Toro proudly displays the ANSI safety seal.

To assure maximum safety, optimum performance, and to gain knowledge of the machine, it is essential that you or any other operator of the machine read and understand the contents of this manual before the engine is started. Pay particular attention to the instructions highlighted by the triangular safety alert symbol. Failure to comply with the safety instructions may result in personal injury.



FOREWORD

The GROUNDSMASTER 322-D was developed to satisfy the demand for a maneuverable, intermediate size, turf maintenance rotary mower. The machine has advanced concepts in engineering, and design; and if maintained properly, it will give excellent service.

Since the GROUNDSMASTER 322-D is a high-quality product, Toro is concerned about the future use of the machine and safety of the user. Therefore, read this manual to familiarize yourself with proper set-up, operation and maintenance instructions. The major sections of the manual are:

1. Safety Instructions
2. Set-Up Instructions
3. Before Operating
4. Operating Instructions
5. Maintenance

Certain information in this manual is emphasized. DANGER, WARNING and CAUTION identify personal safety-related information. IMPORTANT identifies mechanical information demanding special attention. Be sure to read the directive because it deals with the possibility of damaging a part or parts of the machine. NOTE identifies general information worthy of special attention.

SERVICE MANUAL

A Service Manual is available for the Groundsmaster 322-D. This publication provides information for trouble-shooting, adjusting, testing and repair of major systems and components on the machine. To order this publication, contact your authorized Toro Distributor. Ask for Form 83-400-ST, Groundsmaster 322-D Service Manual.

SPARK ARRESTOR

Because in some areas there are local, state or federal regulations requiring that a spark arrestor be used on the engine of this mower, a spark arrestor is incorporated with the muffler assembly.

These parts are approved by the United States Department of Agriculture Forestry Service.

When mower is used or operated on any California forest, brush or grass covered land, a working order spark arrestor muffler must be attached. If not, the operator is violating state law, Section 4442 Public Resources Code.

If help concerning set-up, operation, maintenance or safety is ever needed, contact the local Authorized TORO Distributor. In addition to genuine TORO replacement parts, the distributor also has optional equipment for the complete line of TORO turf care equipment. Keep your Toro all TORO. Buy genuine TORO replacement parts and accessories.

COPYRIGHT © ALL RIGHTS RESERVED
The Toro Company — 1990
MINNEAPOLIS, MN 55420 – U.S.A.

TABLE OF CONTENTS

	Page
SAFETY INSTRUCTIONS	3-5
SAFETY AND INSTRUCTION DECALS	5-6
SPECIFICATIONS	7-8
LOOSE PARTS	8
SET-UP INSTRUCTIONS	9-14
BEFORE OPERATING	14-16
Check Crankcase Oil	14
Fill Fuel Tank with Diesel Fuel	15
Check Cooling System	15
Check Hydraulic System Oil	16
CONTROLS	17-19
OPERATING INSTRUCTIONS	20-22
Starting/Stopping Engine	20
Bleeding Fuel System	20
Checking Interlock Switches	21
Pushing or Towing Traction Unit	21
Operating Characteristics	22
LUBRICATION MAINTENANCE	22-23
ELECTRICAL MAINTENANCE	24
Replacing Seat Switch	24
Replacing PTO Switch	24
Servicing Battery	24
AIR CLEANER MAINTENANCE	25-26
General Maintenance Practices	25
Servicing Dust Cup and Baffle	25
Servicing Air Cleaner Filter	25
Inspecting Filter Element	26
ENGINE MAINTENANCE	26
Cleaning Radiator and Screen	26
Changing Crankcase Oil and Filter	26
Servicing Fuel System	27
Bleeding Air From Injectors	28
Servicing Engine Belts	28
Changing Coolant in Cooling System	29
Servicing Spark Arrestor Muffler	29
TRACTION DRIVE MAINTENANCE	30-31
Adjusting Traction Control Rod	30
Adjusting Traction Pedal Friction Wheel	30
Adjusting Traction Drive For Neutral	30
Adjusting Traction Interlock Switch	31
PTO DRIVE MAINTENANCE	31
Correcting PTO Drive Belt Slippage	31
STEERING MAINTENANCE	32
Adjusting Tilt Steering Control	32
Adjusting Rear Wheel Toe-In	32
Adjusting Rear Wheel Bearings	32
BRAKE MAINTENANCE	33
Adjusting Brakes	33
HYDRAULIC SYSTEM MAINTENANCE	34-35
Adjusting Lift Lever Latch	34
Replacing Hydraulic Oil Filter	34
Changing Hydraulic System Oil	34
IDENTIFICATION AND ORDERING	36
PREPARATION FOR SEASONAL STORAGE	36
SERVICE INTERVAL CHART	37-39
THE TORO PROMISE	40

SAFETY INSTRUCTIONS

The GROUNDSMASTER 322-D was tested and certified by TORO for compliance with the B71.4 — 1984 specifications of the American National Standards Institute. Although hazard control and accident prevention partially are dependent upon the design and configuration of the machine, these factors are also dependent upon the awareness, concern, and proper training of the personnel involved in the operation, transport, maintenance, and storage of the machine. Improper use or maintenance of the machine can result in injury or death. To reduce the potential for injury or death, comply with the following safety instructions.

BEFORE OPERATING

1. Read and understand the contents of this manual before starting and operating the machine. Become familiar with all controls and know how to stop quickly. A free replacement manual is available by sending complete Model and Serial Number to:

The Toro Company
8111 Lyndale Avenue South
Minneapolis, Minnesota 55420

2. Do not allow children to operate the machine. Do not allow adults to operate the machine without proper instruction.

3. Never operate the machine when under the influence of drugs or alcohol.

4. Remove all debris or other objects that might be picked up and thrown by cutter blades or fast moving components from other attached implements. Keep all bystanders away from the operating area.

5. Keep all shields and safety devices in place. If a shield, safety device or decal is damaged, malfunctioning or illegible, repair or replace it before operation is commenced. Also tighten loose nuts, bolts and screws to ensure machine is in safe operating condition.

6. Do not wear loose fitting clothing because it could get caught in moving parts. Always wear long pants and substantial shoes. Wearing safety glasses, safety shoes and a helmet is advisable and required by some local ordinances and insurance regulations.

SAFETY INSTRUCTIONS

7. Be sure interlock switches are adjusted correctly so engine cannot be started unless traction pedal is released – neutral position – and PTO lever is in OFF position.

8. Fill fuel tank with diesel fuel before starting the engine. Avoid spilling any fuel. Since diesel fuel is flammable, handle it carefully.

A. Use an approved fuel container.

B. Do not fill fuel tank when engine is hot or running.

C. Do not smoke while handling fuel.

D. Fill fuel tank outdoors and up to about one inch (25 mm) from the top of the bank (bottom of filler neck).

E. Wipe up any spilled fuel oil.

WHILE OPERATING

9. Sit on the seat when starting the engine and operating the machine.

10. Before starting the engine:

A. Engage parking brake.

B. Make sure traction pedal is in neutral and PTO is in OFF, disengage position.

C. After engine is started, release parking brake and keep foot off traction pedal. Machine must not move. If movement is evident, the neutral return mechanism is adjusted incorrectly; therefore, shut engine off and adjust until machine does not move when traction pedal is released.

11. Do not run the engine in a confined area without adequate ventilation. Exhaust fumes are hazardous and could possibly be deadly.

12. Maximum seating capacity is one person. Therefore, never carry passengers.

13. Using the machine demands attention, and to prevent loss of control:

A. Operate only in daylight or when there is good artificial light.

B. Drive slowly.

C. Watch for holes or other hidden hazards.

D. Look behind machine before backing up.

E. Do not drive close to a sand trap, ditch, creek or other hazard.

F. Reduce speed when making sharp turns and when turning on a hillside.

G. Avoid sudden stops and starts.

14. Traverse slopes carefully when implement is attached. Do not start or stop suddenly when traveling uphill or downhill.

15. The grass deflector must always be installed and in lowest position on the side discharge cutting unit and properly attached to Triflex cutting unit wings. If the cutting unit discharge area ever plugs, disengage PTO and shut engine off before removing the obstruction.

16. Operator must be skilled and trained in how to drive on hillsides. Failure to use caution on slopes or hills may cause loss of control possibly resulting in personal injury or death.

17. Never raise the cutting unit or other attached implement while the blades or other parts are rotating.

18. If cutting blades or other implement components strike a solid object or the machine vibrates abnormally, disengage PTO, move throttle to SLOW, set parking brake and shut engine off. Remove key from switch to prevent possibility of accidental starting. Check cutting unit or other implement and traction unit for damage and defective parts. Repair any damage before restarting the engine and operating the implement or cutting unit. Assure cutting unit blades are in good condition and blade bolts are torqued to proper specifications (See Cutting Deck Operator's Manual).

19. If engine stalls or machine loses headway and cannot make it to the top of a slope, do not turn machine around. Always back slowly straight down the slope.

20. The grass deflector must always be installed and in lowest position on the side discharge cutting unit. This product is designed to drive objects into the ground where they lose energy quickly in grassy areas. However, don't take an injury risk!! When a person or pet appears unexpectedly in or near the mowing area, STOP MOWING. Careless operation, combined with terrain angles, ricochets, or improperly positioned guards, can lead to thrown object injuries. Do not resume mowing until area is clear.

21. Do not touch engine, muffler or radiator while engine is running or soon after it is stopped. These areas could be hot enough to cause a burn.

22. Lower the cutting unit or other attached implement to the ground and remove key from switch whenever machine is left unattended.

23. Before getting off the seat:

A. Move traction pedal to neutral position and remove foot from pedal.

B. Set the parking brake and disengage the PTO.

SAFETY INSTRUCTIONS

C. Shut the engine off and remove key from ignition switch. Wait for all movement to stop before getting off the seat.

MAINTENANCE

24. Remove key from ignition switch to prevent accidental starting of the engine when servicing, adjusting or storing the machine.

25. If major repairs are ever needed or assistance is desired, contact an Authorized TORO Distributor.

26. To reduce potential fire hazard, keep the engine free of excessive grease, grass, leaves and accumulations of dirt.

27. Make sure machine is in safe operating condition by keeping nuts, bolts and screws tight. Check all cutting unit blade mounting bolts frequently to assure they are torqued to proper specifications (See Cutting Deck Operator's Manual).

28. THE ASBESTOS BRAKE LININGS CONTAIN ASBESTOS FIBERS. BREATHING ASBESTOS DUST MAY BE HAZARDOUS TO YOUR HEALTH AND MAY CAUSE SERIOUS RESPIRATORY OR OTHER BODILY HARM. For your protection:

A. Avoid creating dust.

B. Do not remove brake drum without proper equipment.

C. Do not work on brake linings without proper protective equipment.

D. Do not replace brake linings without proper protective equipment.

E. Do not attempt to sand, grind, chisel, file, hammer, or alter brake linings in any manner without proper protective equipment.

F. Follow O.S.H.A. standards for proper protective devices to be used when working with asbestos materials.

29. Make sure all hydraulic line connectors are tight, and all hydraulic hoses and lines are in good condition before applying pressure to the system.

30. Keep body and hands away from pin hole leaks or nozzles that eject hydraulic fluid under high pressure. Use paper or cardboard, not hands, to search for leaks. Hydraulic fluid escaping under pressure can have sufficient force to penetrate skin and do serious damage. If fluid is ejected into the skin it must be surgically removed within a few hours by a doctor familiar with this form of injury or gangrene may result.

31. Before disconnecting or performing any work on the hydraulic system, all pressure in system must be relieved by stopping engine and lowering implement to the ground.

32. If the engine must be running to perform maintenance or an adjustment, keep clear of PTO shaft, cutting unit blades and other moving parts.

33. Do not overspeed the engine by changing the governor settings. Maximum engine speed with no load is 3200 ± 50 rpm. To ensure safety and accuracy, have an Authorized TORO Distributor check maximum engine speed with a tachometer.

34. Engine must be shut off before checking oil or adding oil to the crankcase.

35. At the time of manufacture, the machine conformed to safety standards in effect for riding mowers. To ensure optimum performance and continued safety certification of the machine, use genuine TORO replacement parts and accessories. Replacement parts and accessories made by other manufacturers may result in non-conformance with the safety standards, and the warranty may be voided.

SAFETY AND INSTRUCTION DECALS

The following safety and instruction decals are mounted on the traction unit. If any decal becomes damaged or illegible, install a new decal. Part numbers are listed below or in your parts catalog.

STARTING INSTRUCTIONS (SEE OPERATOR'S MANUAL)

1. Disengage power take-off.
2. Place traction drive pedal in neutral position.
3. Depress brake pedal.
4. Set throttle control – full open.
5. Push glow plug switch to on position and preheat until the glow plug indicator turns red hot and hold on while starting.
6. Turn key to start position. To stop turn key to off position and remove key.

NOTE: ENGINE WILL SHUT OFF AUTOMATICALLY DUE TO HIGH ENGINE TEMPERATURE. WHEN THIS HAPPENS:

1. Allow engine to cool.
2. Clean debris from front of radiator.
3. Check coolant level.
   CAUTION: Coolant under pressure. Use caution when removing radiator cap to prevent burns.
4. Depress high temperature reset on dash.
5. Restart according to starting instructions.

READ AND UNDERSTAND OPERATOR'S MANUAL BEFORE OPERATING THIS MACHINE.
REPLACEMENT MANUAL AVAILABLE BY SENDING COMPLETE MODEL NUMBER TO:
THE TORO COMPANY, 8111 LYNDALE AVE., MINNEAPOLIS, MN. 55420

ON BATTERY COVER
(Part No. 43-4290)

⚠ CAUTION
MAINTAIN WHEEL FASTENER TORQUE AT 45-55 ft.-lb.
SEE OPERATORS MANUAL FOR INSTRUCTIONS. 67-1720

ON FRAME NEAR FRONT WHEELS
(Part No. 67-1720)

TRACTION PEDAL

FORWARD OF TRACTION PEDAL
(Part No. 27-7320)

SAFETY AND INSTRUCTION DECALS

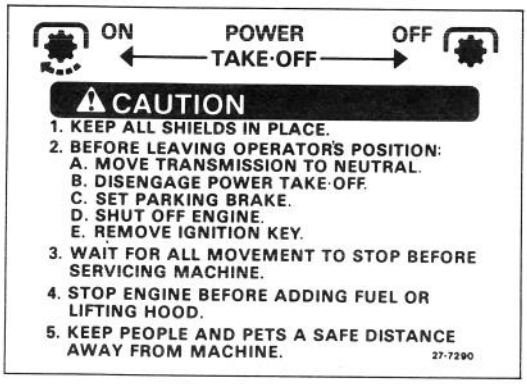

NEAR PTO LEVER
(Part No. 27-7290)



ON RADIATOR FAN SHROUD (3)
(Part No. 77-3100)



ON LIFT ARM AND PUSH ARMS
(Part No. 61-3610)



NEAR TOOL BOX COVER
(Part No. 67-1710)



NEAR FUEL TANK CAP
(Part No. 27-7310)

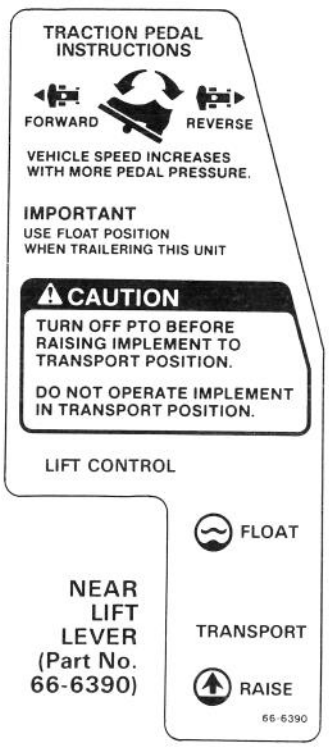

NEAR LIFT LEVER
(Part No. 66-6390)



ON STEERING COLUMN SUPPORT
(Part No. 82-8940)



ON STEERING COLUMN SUPPORT
(Part No. 82-8930)



ON AIR CLEANER TUBE
(Part No. 67-1700)



ALONGSIDE FUEL CAP
(Part No. 49-2280)

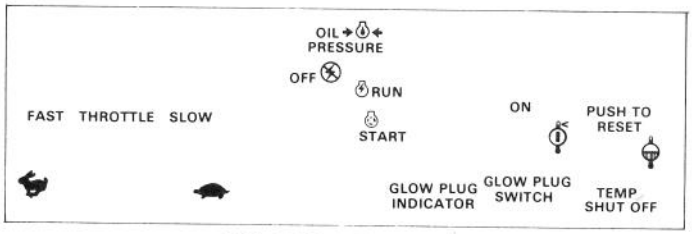

ON CONTROL PANEL
(Part No. 43-3980)

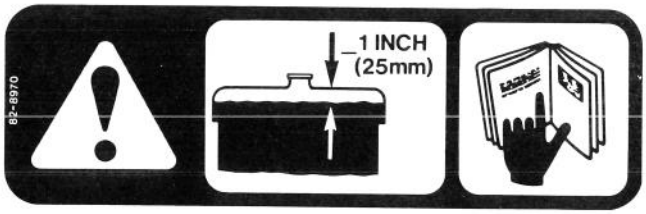

ON RADIATOR SUPPORT
(Part No. 82-8970)

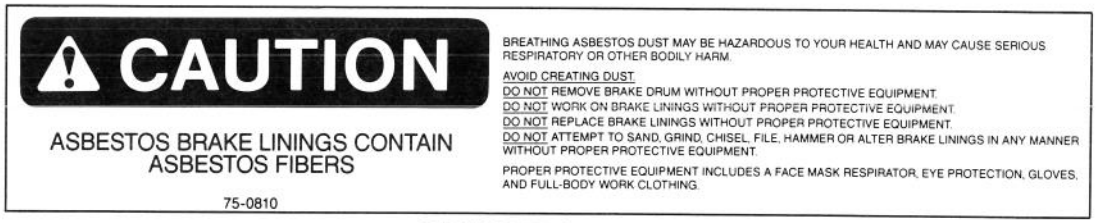

BEHIND FRONT TIRE
(Part No. 75-0810)

SPECIFICATIONS

Engine: The 4-cycle, 3 cylinder, overhead valve Mitsubishi diesel engine, Model K3D, is water cooled and delivers 22 HP (16.4 kw) @ 3600 rpm. Cylinder bore is 2-7/8 in. (73 mm), stroke is 3-1/16 in. (78 mm) and displacement is 59.7 cu. in. (979 cc). Compression ratio is 23:1. Crankcase oil capacity w/filter is 3.7 qt. (3.5 L). Filter is full flow, replaceable, screw-on type. Mechanical centrifugal type governor limits maximum no-load engine speed to 3200 ± 50 rpm. Idle speed is 1500 ± 50 rpm. Glow plug is installed in each cylinder for starting assist.

Air Cleaner: Heavy duty, remote mounted.

Muffler: Volume equal to approximately six times engine displacement for excellent silencing. Spark arrestor incorporated with muffler.

Cooling System: Radiator has tube and fin construction with hydraulic oil cooler in lower tank. Capacity of cooling system is approximately 6 quarts (5.7 L) of a 50% mixture of permanent, ethylene glycol anti-freeze and water. Radiator is equipped with a 15 psi (103 kPa) pressure cap and engine has a 170° F (76.5° C) thermostat.

Electrical: 12 volt battery has 550 amp. cold cranking performance at 0° F (-18° C). 12 volt negative ground, 35 amp. alternator w/regulator for charging battery. Electric solenoid on injection pump operates shut-off device to stop fuel flow; thereby stopping engine. A 40 amp. manual reset circuit breaker protects electrical wiring.

Fuel System: Fuel tank holds approximately 8-1/2 gal. (32 L) of No. 1 or 2 automotive type diesel fuel oil, per SAE J313c spec. 12 volt, electric (transistor type), fuel pump w/replaceable filter mounted on frame. Fuel filter/water separator with replacable cartridge is mounted on frame.

Front Axle: The heavy Duty Dana GT 20 axle has reduction of 20.9:1. Axle has automotive type differential, bevel gear pinion and ring gear with spur gear reduction from transmission. All axle components are mounted in tapered roller bearings.

Transmission: Sundstrand in-line hydrostatic transmission is mounted directly to the front axle and driven by flexible drive couplings. Operating pressure is 500 to 3000 psi (3447 to 20 685 kPa) and normal charge pressure is 70 to 150 psi (453 to 1034 kPa). Implement relief valve setting is 700 to 900 psi (4826 to 6205 kPa). Displacement is 0.913 cubic inch (15 cm^3) per revolution, and transmission is controlled by foot-actuated pedal. Front axle is the hydraulic fluid reservoir, and its capacity is 5 quarts (4.7 L) of SAE 10W-40 SF/CC or CD engine oil. The 25 micron hydraulic oil filter is a screw on replaceable type. For replacement filters, order Toro part number 67-8110.

Ground Speed: Speed is infinitely variable from 0 to 9.5 mph (0 to 15 km/hr) forward and reverse.

Tires: Two rear tires are 16 x 6.50-8, 4-ply rating rib, on demountable, drop center wheels. The two front tires are 23 x 8.50-12, extra traction tread, 4-ply rating, on demountable, drop center wheels. Recommended air pressure for both the front and rear tires is 12 psi (83 kPa).

Brakes: Brakes controlled by 3 pedals. Two are for steering assist. Are individually controlled by left foot. Third pedal operates both brakes; is controlled by either foot. Parking brake latch provided for third pedal. Pedals are connected to brakes by multi-stranded cable and conduit.

Steering: The 15 inch (38 cm) steering wheel is mounted on steering valve consisting of a control valve and metering section which regulates pressure and meters flow to the steering cylinder. Minimum turning radius is 18 in. (46 cm) from center of turn to closest side of drive wheel; however, zero turning radius results when individual wheel brakes are used. Steering wheel adjustable fore and aft for operator comfort.

Main Frame: Frame is welded, formed steel, reinforced with square and rectangular tubing.

Interlock Switches: PTO Switch – Shuts engine off when PTO is engaged with no operator in seat. Traction Switch – Shuts engine off when traction pedal is engaged with no operator in seat. Seat Switch – Shuts engine off if operator leaves seat without disengaging PTO and/or traction pedal. Engine will not start if PTO or traction pedal is engaged.

Instrument Panel And Controls: Ammeter, hourmeter, fuel gauge, ignition switch, coolant temperature switchgauge to prevent overheating, oil pressure warning light, glow plug switch and glow plug indicator and throttle control are on instrument panel. Hand operated PTO lever is located to right of the seat. Foot pedal control for transmission operation at right of steering column.

PTO Drive: Shaft is driven by a tight-slack double "A" section, torque team V-belt directly from output shaft of engine. Shaft is clutched by pivoting the shaft support with a spring loaded, over center, hand operated lever. PTO speed – 1810 rpm @ 3200 rpm engine speed. Connection to implement is with high quality, needle bearing universal joint with slip joint.

Implement Lift: Cutting unit or implement is lifted by hydraulic cylinder that has 3 in. (76 mm) bore and 3-1/4 in. (82 mm) stroke.

SPECIFICATIONS

Dimensions and Weights (approx):

Traction Unit with Cutting Unit	Length:	112 in. (2.8 m)
	Width:	85-1/2 in. (2.17 m)
	Height:	50 in. (1.27 m)
	Curb Weight:	1650 lb (748 Kg)

Optional Equipment:

Leaf Mulcher Kit, Model No. 30733 (For Model 30722 C.U.)

Standard Seat Kit, Model No. 30770

Deluxe Seat Kit Model No. 30772 w/Model No. 30791 Seat Adaptor Kit

Cutting Unit, Model No. 30722 (L.H. Side Discharge)

Cutting Unit, Model No. 30710 (Rear Discharge)

Cutting Unit, Model No. 30715 (88" Triflex Deck)

Tire Chains, Part No. 11-0390

V-Plow – 48 in. (1.219 m) for snow removal Model No. 30750

V-Plow Installation Kit, Model No. 30757 (includes tire chains)

Drive Wheel Weights, Part No. 11-0440

Rear Weights (2 per kit), Part No. 24-5780

23 x 10.5 x 12 Tire and Wheels, Part No. 62-7020

High Sail Blade, Part No. 23-2410

LOOSE PARTS

Note: Use this chart as a checklist to ensure all parts necessary for assembly have been shipped. Without any of these parts, total set-up cannot be complete.

DESCRIPTION	QTY.	USE
Flatwasher 3/8 I.D. x 7/8 O.D. Locknuts 5/16-24 Cotter Pin 3/32 x 1/2 in. (13 mm) Flatwasher 9/32 I.D. x 5/8 in. (16 mm) O.D. Parking Brake Rod Compression Spring Steering Column Cover Self-Tapping Screw Knob	4 4 3 1 1 1 1 6 1	Install Steering Valve Assembly, page 9.
Steering Wheel Foam Seal Nut Screw	1 1 1 1	Install Steering Wheel, page 9.
Manual Tube Tube Cap R-Clamp	1 1 2	Install on right underside of seat, page 11.
Ball Joint R.H. (Shipped in tool box)	1 1	Install Ball Joint (implement installation) and Connect Lift Cylinder, page 12.
Roll Pin 3/16 x 1-1/2 in. (38 mm) Lift Chain Shackle Shackle Pin 3/8 x 1-1/2 in. (38 mm) Cotter Pin 1/8 x 3/4 in. (19 mm) Tension Spring	1 3 6 6 6 1	Use with implements; refer to implement operator's manual for installation instructions.
Wheel Nut 1/2-20 Wheel	10 2	Mount Rear Steering Wheels, page 9. Mount on Rear Axle, page 9.
Operator's Manual (Traction Unit) Parts Catalog	2 1	
Commercial Products Set-up Card	1	Fill out and return to Toro
Registration Card	1	Affixed to machine.
Hydraulic Oil Filter	1	Change after first 10 hours operation.

SET-UP INSTRUCTIONS

INSTALL STEERING GEAR ASSEMBLY

1. Remove capscrew securing column support to mounting bracket (Fig. 1). Discard screw.

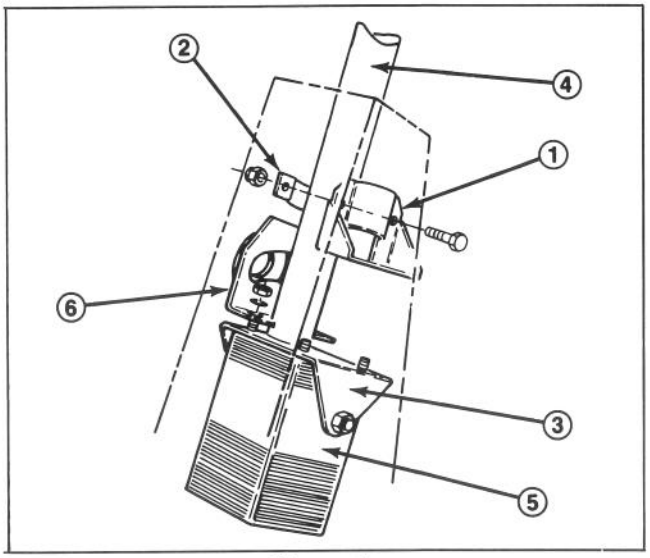

Figure 1

1. Column support
2. Clamp half
3. Mounting bracket
4. Steering column
5. Valve
6. Pivot plate

2. Loosen clamp half mounting screws securing column support to steering column (Fig. 1).

3. Slide steering column upward until valve mounting studs are positioned into mounting bracket and pivot plate (Fig. 1).

4. Secure valve to mounting bracket and pivot plate with (2) locknuts (5/16-18) and (2) flat washers (3/8 I.D. x 7/8 O.D.).

5. Retighten clamp half mounting screws to secure steering column. Make sure column support is tight against mounting bracket.

6. Secure valve to mounting bracket and column support with (2) locknuts (5/16-18) and (2) flat washers (3/8 I.D. x 7/8 O.D.).

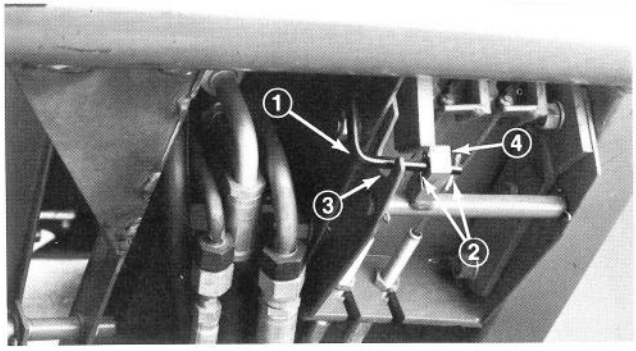

Figure 2

1. Parking brake rod
2. Cotter pins
3. Cutout
4. Latch

7. Install cotter pin (3/32 x 1/2 in. — 2.4 x 13 mm) through hole at top of parking brake rod. Install another cotter pin (3/32 x 1/2 in. — 2.4 x 13 mm) through inside hole at L-shaped end of brake rod (Fig. 2).

8. Slide flat washer (9/32 x 5/8 in. O.D. — 7.1 x 16 mm) and compression spring onto rod. Assure parts stay on the rod.

9. Slide top of rod up the steering tower and bottom of rod between cutout in brake mount and through hole in parking brake latch. Secure with cotter pin (Fig. 2).

10. Slide steering column cover onto steering post and parking brake rod (Fig. 3). Mount the cover to inside of steering tower with six self tapping screws (1/4-20 x 5/8 in.) (Fig. 3). Install the knob on parking brake rod.

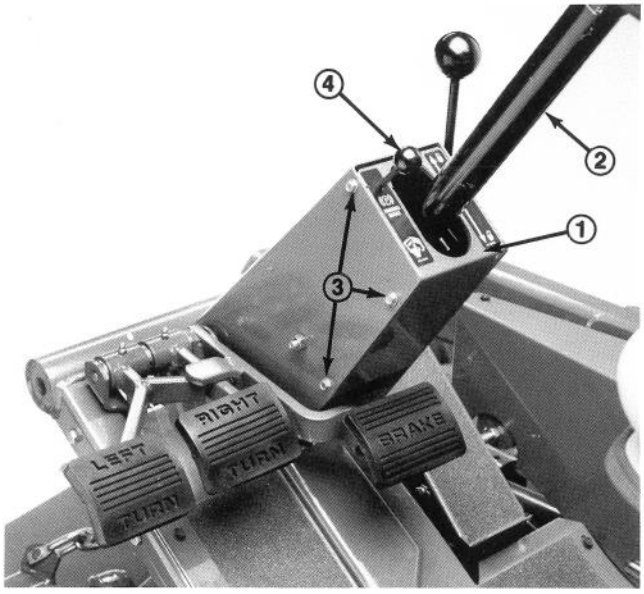

Figure 3

1. Steering column cover
2. Steering column
3. Self tapping screws
4. Knob

INSTALL REAR WHEELS

1. Remove and discard fasteners securing wheels.

2. Mount wheels and torque mounting nuts to 45-55 ft-lb (61-75 N·m).

INSTALL STEERING WHEEL

1. Move rear wheels so they point straight ahead.

2. Remove jam nut from steering shaft. Slide foam seal and steering wheel onto steering shaft.

3. Secure steering wheel to shaft with jam nut (Fig. 4) and tighten it to 10-15 ft-lb.

4. Install cap to steering wheel with screws.

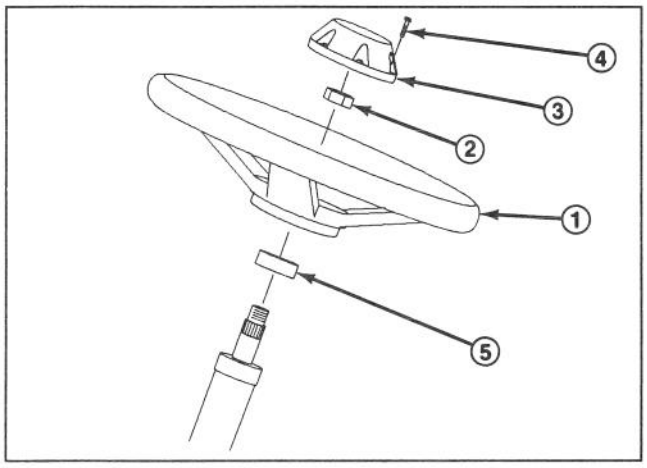

Figure 4

1. Steering wheel
2. Jam nut
3. Cap
4. Screw
5. Foam seal

REMOVE BATTERY FROM CHASSIS

1. Release the two latches holding instrument cover in place. Carefully remove instrument cover to expose the battery.

2. Remove two wing nuts and the hold down strap that secure battery and seat switch in place (Fig. 5). Lift battery out of Chassis. Keep wing nuts and hold down strap in a safe place for later use.

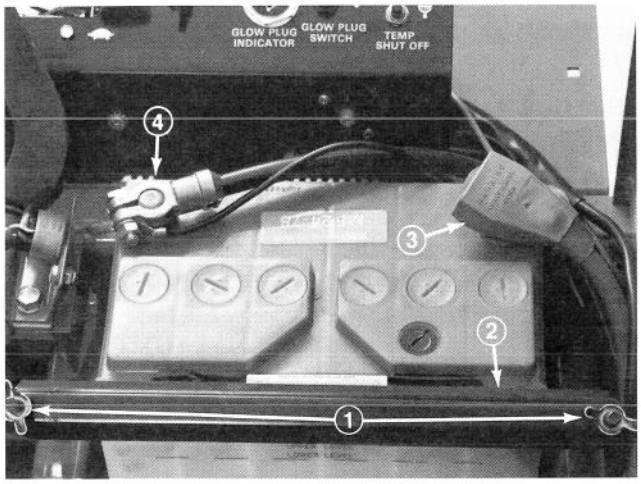

Figure 5

1. Wing nuts
2. Hold down strap
3. Positive terminal
4. Negative terminal
5. Seat switch and shipping bracket (not shown)

INSTALLING SEAT

The Groundsmaster 322-D is shipped without the seat assembly. Either optional Seat Kit, Model No. 30770 or 30772 must be installed.

Seat Kit, Model No. 30770, Standard Seat:

1. (Model 30739 only) Remove (2) flange screws securing sealing plate to frame, over fuel tank. Remove sealing plate.

2. Mount seat support bracket to frame (Fig. 6).

Note: When mounting bracket, slide left capscrew into bracket before lowering into mounting position.

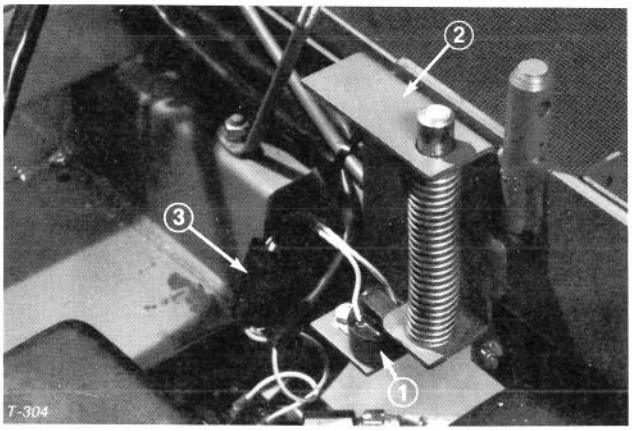

Figure 6

1. Seat switch
2. Seat support bracket
3. Wire connector

3. Remove the seat switch from shipping bracket (Fig. 5) and mount to seat support bracket using same fasteners (Fig. 6). Connect switch connector to main wire harness connector (Fig. 6).

4. (Model 30739 only) Reinstall sealing plate to frame above fuel tank.

5. Mount seat support to threaded studs on seat slide channel and secure in place with lockwashers and nuts (Fig. 7).

6. Loosely secure (2) R-clamps to right side of seat bottom with (2) capscrews supplied in kit (Fig. 7). Install manual tube into R-clamps and tighten capscrews.

7. Mount seat and seat support to unit with pivot shaft and roll pin (Fig. 8).

8. Install seat support rod to seat support bracket with jam nut (Fig. 9).

9. Hold seat up with seat support rod.

Seat Kit, Model No. 30772, Deluxe Seat with Model 30791Seat Adaptor Kit:

1. (Model 30739 only) Remove (2) flange screws securing sealing plate to frame above fuel tank. Remove sealing plate.

2. Mount seat support bracket to frame (Fig. 6).

SET-UP INSTRUCTIONS

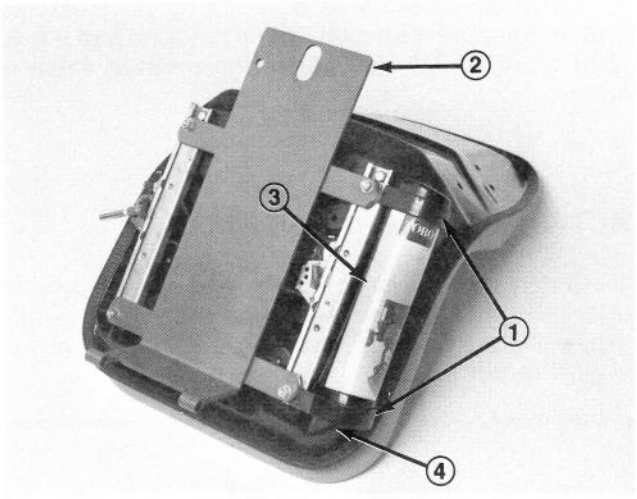

Figure 7

1. R-clamps
2. Seat support
3. Manual tube
4. Cap

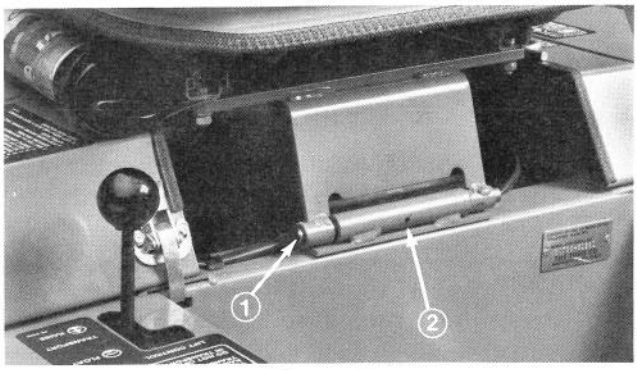

Figure 8

1. Pivot shaft
2. Roll pin

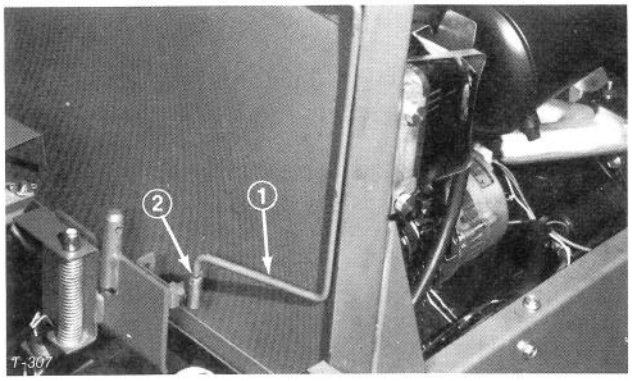

Figure 9

1. Seat support rod *2. Jam nut*

Note: When mounting bracket, slide left capscrew in bracket before lowering into mounting position.

3. Remove seat switch from shipping bracket and mount to seat support bracket using same fasteners (Fig. 6). Connect switch connector to main wire harness connector (Fig. 6).

4. (Model 30739 only) Reinstall sealing plate to frame above fuel tank.

5. Install seat support rod to seat support bracket with jam nut (Fig. 9).

6. Assemble spacer to hex head capscrew, insert capscrew into hole in the seat support and secure capscrew and spacer with a locknut at the bottom of the seat support (Fig. 10).

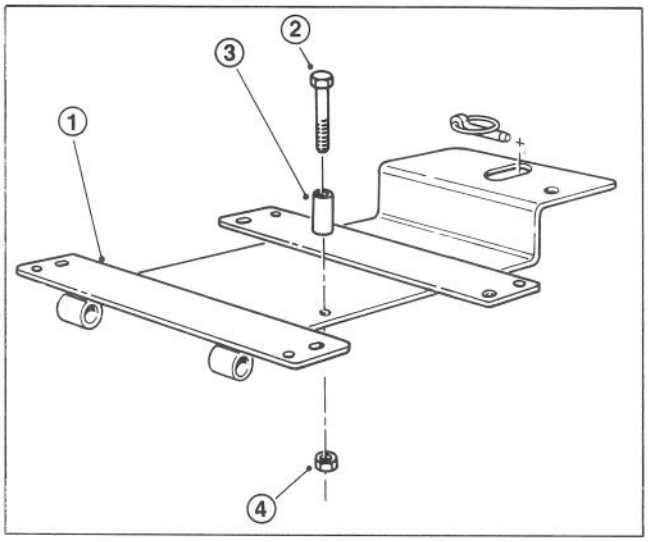

Figure 10

1. Seat support *3. Spacer*
2. Capscrew *4. Locknut*

7. Assemble seat suspension assembly to four capscrews on seat bottom with (4) lockwashers, flatwashers and nuts (Fig. 11).

8. Loosely secure (2) R-clamps to right side of seat bottom with (2) capscrews supplied in kit. Install manual tube into R-clamps and tighten capscrews (Fig. 11).

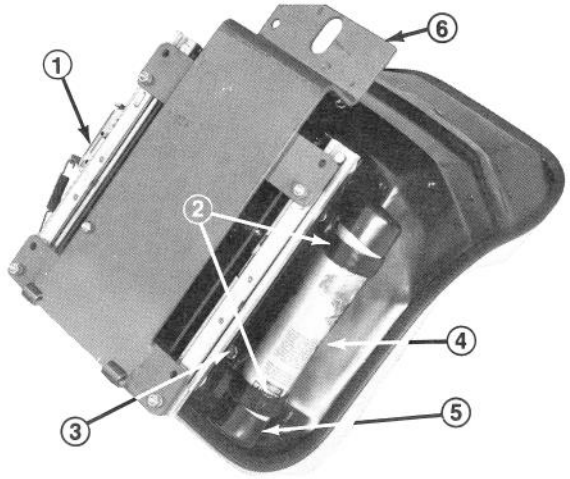

Figure 11

1. Seat suspension assembly *4. Manual tube*
2. R-clamps *5. Cap*
3. Lockwasher, flatwasher and nut *6. Seat support*

SET-UP INSTRUCTIONS

9. Mount seat support over four threaded studs at the bottom of seat suspension assembly and secure in place with lockwashers and nuts (Fig. 11).

10. Mount seat and seat support to unit with pivot shaft and roll pin (Fig. 12).



Figure 12

1. Pivot shaft
2. Roll pin

11. Hold seat up with seat support rod.

PUSH TRACTION UNIT OFF PALLET

1. Reach in and rotate by-pass valve on transmission (Fig. 13) counterclockwise 1/2 to 1 turn. Opening the valve opens an internal passage in the pump, thereby bypassing transmission oil. Because fluid is by-passed, the machine can be pushed without damaging the transmission.

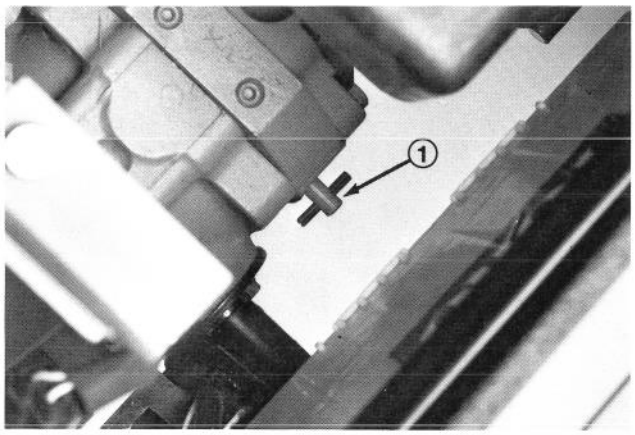

Figure 13

1. By-pass valve

2. Lift machine over shipping braces and push machine off pallet.

3. Close by-pass valve by rotating it clockwise until it is securely seated. Do not exceed 5 to 8 ft-lb (7 to 11 N·m). Do not start engine when valve is open.

ACTIVATE AND CHARGE BATTERY

1. Since battery is not filled with electrolyte or charged, bulk electrolyte with 1.260 specific gravity must be purchased from a local battery supply outlet.

CAUTION

Wear safety goggles and rubber gloves when working with electrolyte, and charge the battery in a well-ventilated place so gases produced while charging can dissipate. Since the gases are explosive, keep open flame and electrical spark away from the battery; do not smoke. Nausea may result if the gases are inhaled. Unplug charger from electrical outlet before connecting to or disconnecting charger leads from battery posts.

2. Remove filler caps from battery and slowly fill each cell until electrolyte is just above the plates. Install filler caps.

3. Connect a 3 to 4 amp battery charger to the battery posts. Charge the battery at a rate of 3 to 4 amperes for 4 to 8 hours.

4. When battery is fully charged, disconnect charger from electrical outlet and battery posts.

5. Remove filler caps and slowly add electrolyte to each cell until level is up to fill ring. Install fill caps.

INSTALL BATTERY IN CHASSIS

1. Install battery and secure with hold down strap and wing nuts (Fig. 5). Remove tape over ends of each cable.

2. Slide the red, positive battery cable (Fig. 5) onto positive battery post and tighten nut securely.

3. Slide the black, negative battery cable (Fig. 5) onto negative battery post and tighten nut securely.

4. Coat both battery connections with either Grafo 112X (skin-over) grease, Toro Part No. 505-47, petroleum jelly or light grease to prevent corrosion and slide rubber boot over positive terminal (Fig. 5).

5. Install the instrument cover and lock the two latches.

6. Disengage seat support rod and slide it into retaining clips (Fig. 14). Pivot seat down and push lynch pin through seat latch stud. Flip wire end of pin over latch stud (Fig. 14).

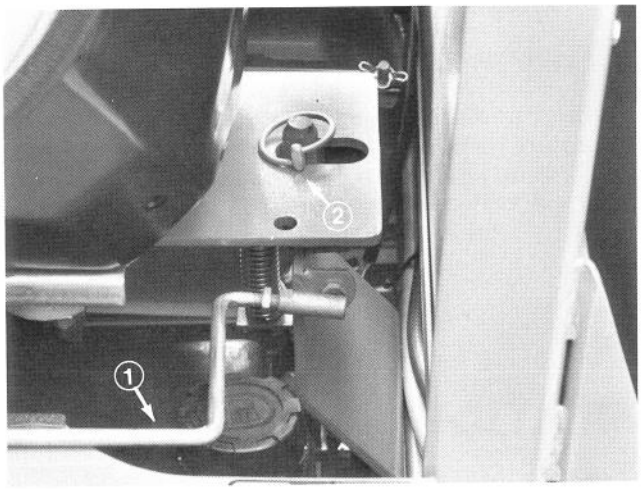

Figure 14

1. Seat support rod
2. Lynch pin

INSTALL BALL JOINT AND CONNECT LIFT CYLINDER

Note: Ball Joints are not required for all implements; refer to implement operator's manual for requirements.

1. Thread jam nut fully onto right hand ball joint.

2. Screw ball joint into right hand push arm until center of ball joint is 2-3/8 inches (60 mm) away from front of push arm (Fig. 15). Do not tighten jam nut.

WARNING

Since left hand push arm is spring-loaded to about 150 pounds (68 kg), a helper is required to push the arm down during installation of the ball joint. Sudden release of the push arm could cause injury.

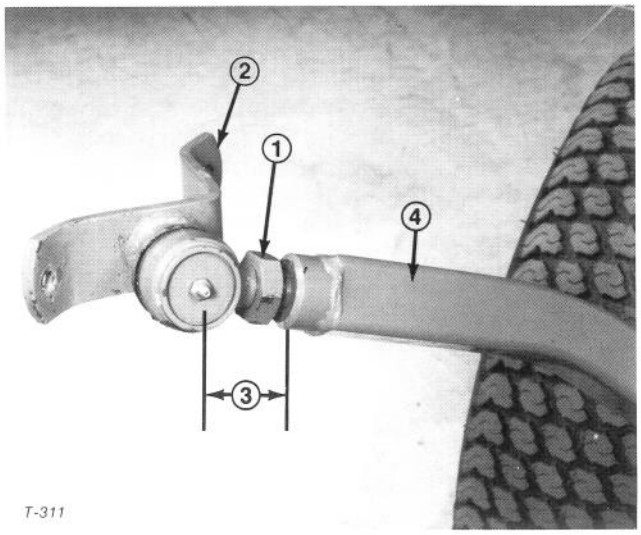

Figure 15

1. Jam nut
2. Ball joint mount
3. 2-3/8 in. (60 mm)
4. Right hand push arm

4. Have a helper push down on the left push arm; then insert a 2 x 4 in. (51 x 102 mm) block of wood between the frame and top of the push arm (Fig. 16). Screw ball joint into left hand push arm until center of ball joint is 2-3/8 inches (60 mm) away from front of push arm (Fig. 16). Do not tighten jam nut.

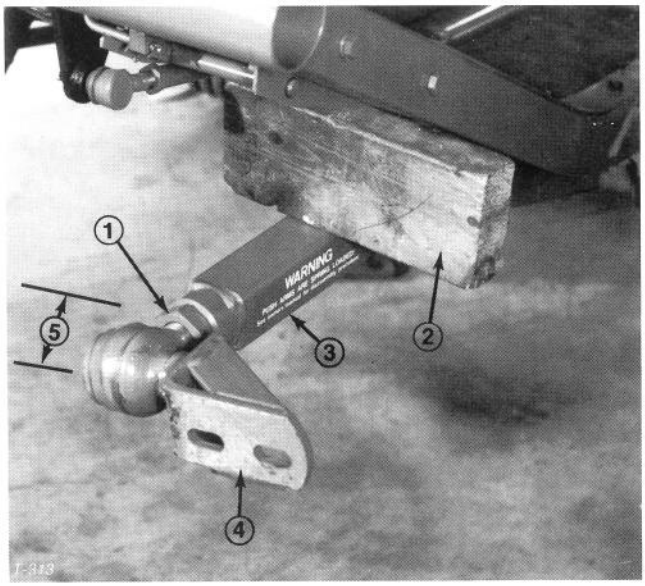

Figure 16

1. Jam nut
2. 2 x 4 in. (51 x 102 mm) block
3. Left hand push arm
4. Ball joint mount
5. 2-3/8 in. (60 mm)

5. Carefully remove 2 x 4 in. (51 x 102 mm) block of wood from between frame and push arm.

SET-UP INSTRUCTIONS

6. Remove spring pin from cylinder pin and slide cylinder pin out of cylinder.

7. Raise front of lift arm until hole in moveable end of cylinder lines up with holes in lift arm brackets. Use caution as lift arm is spring loaded. Hold parts together with cylinder pin, spring pin and cotter pin. Cotter pin must be to the outside (Page 22, Fig. 32).

8. Install implement; refer to implement Operator's Manual for proper installation procedures.

CHECK TIRE PRESSURE

The tires are over-inflated for shipping. Therefore, release some of the air to reduce the pressure. Correct air pressure in the front and rear tires is 12 psi (83 kPa).

CHECK TORQUE OF FRONT WHEEL NUTS

WARNING

Tighten front wheel nuts to 45-55 ft-lb (61-75 N·m) after 1-4 hours of operation and again after 10 hours of operation and every 250 hours thereafter. Failure to maintain proper torque could result in failure or loss of wheel and may result in personal injury.

GREASE TRACTION UNIT

Before the machine is operated, it must be greased to assure proper operating characteristics; refer to Lubrication, page 22. Failure to grease the machine will result in premature failure of critical parts.

BEFORE OPERATING

CHECK CRANKCASE OIL

The engine is shipped with 3.7 quarts (3.5 L) of oil in the crankcase; however, level of oil must be checked before and after the engine is first started.

1. Position machine on a level surface.

2. Disengage hood latch and open the hood.

3. Remove dipstick and wipe it with a clean rag (Fig. 17). Push dipstick down into the tube and ensure it is fully seated. Pull dipstick out of the tube and check level of oil. If oil level is low, remove filler cap (Fig. 18) and add enough oil to raise level to top notch on dipstick (Fig. 17). DO NOT OVERFILL.

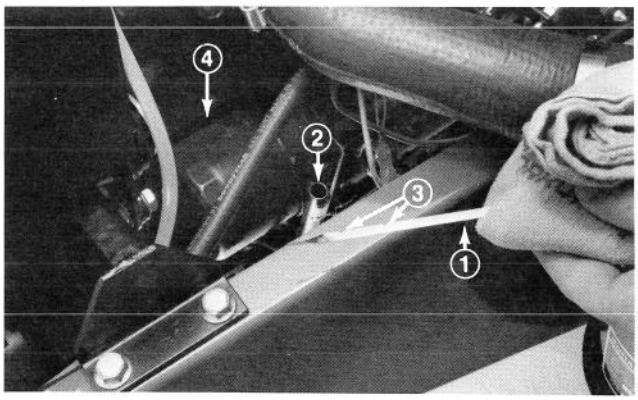

Figure 17

1. *Dipstick*
2. *Dipstick tube*
3. *Keep oil level between notches*
4. *Engine oil filter*

4. The engine uses any high-quality detergent oil having the American Petroleum Institute — API — "service classification" SF/CC or CD. Oil viscosity recommendations are: SAE 10W-30.

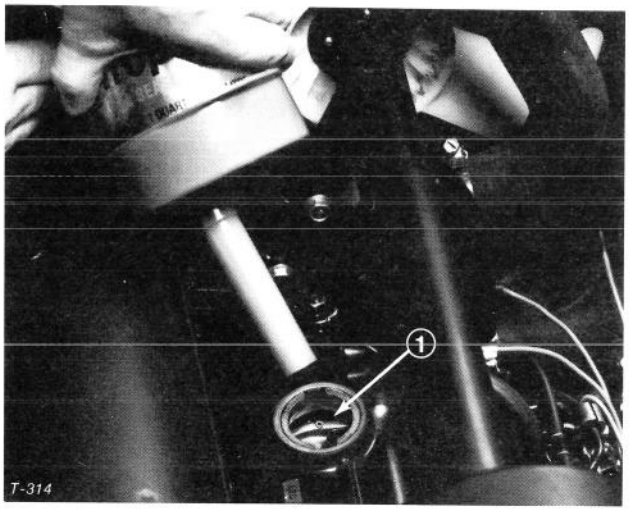

Figure 18

1. *Oil fill hole*

IMPORTANT: Check level of oil after every 5 hours of operation or daily. Change oil after every 50 hours of operation and change the oil filter after the first 50 hours and every 100 hours thereafter. Change oil and filter more frequently when engine is operated in extremely dusty or dirty conditions.

5. Install dipstick into tube.

FILL FUEL TANK WITH DIESEL FUEL

The engine runs on No. 1-D or 2-D automotive type diesel fuel with a minimum cetane rating of 40.

Note: Higher cetane rated fuel may be required if machine is to be used at high altitudes and low-atmospheric temperatures.

Use No. 2-D diesel fuel at temperatures above 20° F (-7° C) and No. 1-D diesel fuel below 20 ° F (-7° C). Use of No. 1-D diesel fuel at lower temperatures provides lower flash point and pour point characteristics, therefore easing startability and lessening chances of chemical separation of the fuel due to low temperatures (wax appearance, which may plug filters).

Use of No. 2-D diesel fuel above 20° F (-7° C) will contribute toward longer life of the pump components. Do not use furnace oil. Furnace oils usually contain heavy cracked distillates which are not suitable for diesel engines.

Store fuel outside of buildings in a convenient location. Tipping the front of the tank up slightly will allow contaminants to collect at the lower end away from the outlet. Never empty the tank below 4 in. (10 cm) from the bottom of the tank to avoid picking up water and other contaminants that may have collected at the bottom. Either filter the remainder at the bottom through a chamois or dispose of it periodically to prevent excessive build-up of contaminants.

Keep all fuel containers free of dirt, water, scale and other contaminants. Many engine difficulties can be traced to contaminents in the fuel.

Use only metal containers for fuel storage. DO NOT store the fuel in a galvanized metal container. A chemical reaction will result, which will plug the filters and cause possible fuel system damage.

If possible, fill the Groundsmaster 322-D fuel tank at the end of each days operation. This will prevent possible buildup of condensation inside the fuel tank, preventing possible engine damage. Allow the engine to thoroughly cool down before re-fueling.

1. Tip seat forward and prop it with the support rod so it cannot fall accidentally (Fig. 19) Using a clean rag, clean area around fuel tank cap.

2. Remove cap from the fuel tank (Fig. 19) and fill the 8-1/2 gallon (30 L) tank to within 1 inch (25 mm) from the top with diesel fuel. Install fuel tank cap tightly after filling tank.

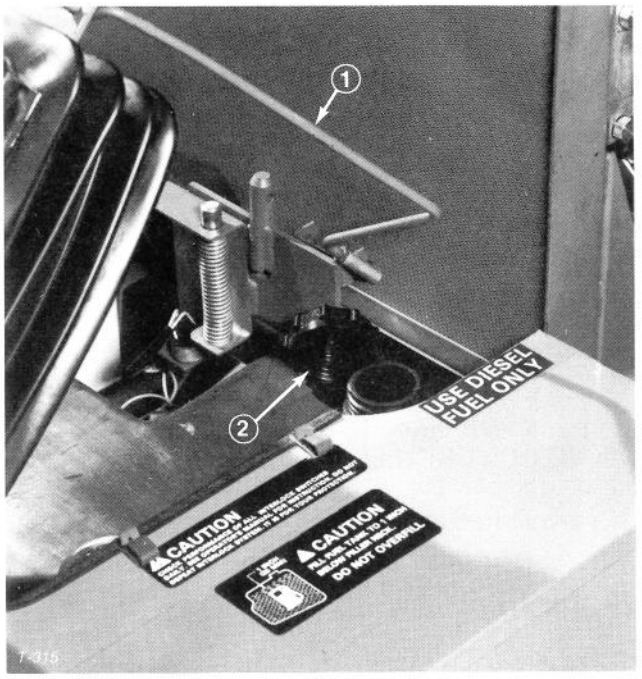

Figure 19

1. Support rod
2. Fuel tank cap

DANGER

Because diesel fuel is flammable, caution must be used when storing or handling it. Do not fill fuel tank while engine is running, hot or when machine is in an enclosed area. Vapors may build up and be ignited by a spark or flame source many feet away. DO NOT SMOKE while filling the fuel tank to prevent the possibility of an explosion. Always fill fuel tank outside and wipe up any spilled diesel fuel before starting engine. Use a funnel or spout to prevent spilling diesel fuel and fill tank to about 1 inch (25 mm) below the filler neck. Store diesel fuel in a clean safety-approved container and keep the cap in place on the container. Keep diesel fuel in a cool, well-ventilated place; never in an enclosed area such as a hot storage shed. To assure volatility and to prevent contamination, do not buy more than a 6 month supply.

CHECK COOLING SYSTEM

Clean debris off screen and front of radiator daily, hourly if conditions are extremely dusty and dirty; refer to Cleaning Radiator and Screen, page 26.

The cooling system is filled with a 50/50 solution of water and permanent ethylene glycol anti-freeze. Check level of coolant at beginning of each day, before starting the engine. Capacity of cooling system is approximately 6 quarts (5.7 L).

1. ⚠ Carefully remove radiator cap. Coolant is pressurized and may be hot if engine has been running.

2. Check level of coolant in radiator. Level of coolant must be above the core and about 1 inch (25 mm) below bottom of filler neck.

3. If coolant level is low, replenish the system. DO NOT OVERFILL.

4. Install radiator cap.

CHECK HYDRAULIC SYSTEM OIL

The hydraulic system is designed to operate on any high-quality detergent oil having the American Petroleum Institute — API — "service classification" SF/CC or CD. Oil viscosity — weight — must be selected according to anticipated ambient temperature. Temperature/viscosity recommendations are:

Expected Ambient Temperature	Recommended Viscosity and Type
(Extreme) over 90 F	SAE 30, Type SF/CC or CD engine oil.
(Normal) 40-100 F	SAE 10W-30 or 10W-40, Type SF/CC or CD engine oil.
(Cool — Spring/Fall) 30-50 F	SAE 5W-30, Type SF/CC or CD engine oil.
(Winter) Below 30 F	Type "F" or "FA" ATF Automatic Transmission Fluid.

Note: Do not mix engine oil and automatic transmission fluid or hydraulic system component damage may result. When changing fluids, also change transmission filter. **DO NOT USE DEXRON II ATF.**

Note: Fluid to operate the power steering is supplied by the hydraulic system transmission charge pump. Cold weather start-up may result in "stiff" operation of the steering until the hydraulic system has warmed up. Using proper weight hydraulic oil in system will minimize this condition.

The axle housing acts as the reservoir for the system. The transmission and axle housing are shipped from the factory with approximately 5 quarts (4.7 L) of SAE 10W-30 engine oil. However, check level of transmission oil before engine is first started and daily thereafter.

1. Position machine on a level surface, raise the implement and stop the engine.

2. Unscrew dipstick cap (Fig. 20) from filler neck and wipe it with a clean rag. Screw dipstick cap fingertight onto filler neck. Unscrew the dipstick and check level of oil. If level is not within 1/2 inch (13 mm) from the groove in the dipstick (Fig. 20), add enough oil to raise level to groove mark. DO NOT OVERFILL by more than 1/2 inch (13 mm) above groove.

IMPORTANT: When adding oil to the hydraulic system, use funnel with a fine wire screen — 200 mesh — and ensure funnel and oil are immaculately clean. This procedure prevents accidental contamination of the hydraulic system.

3. Screw dipstick filler cap finger-tight onto filler neck. It is not necessary to tighten cap with a wrench.

4. Lower the implement.

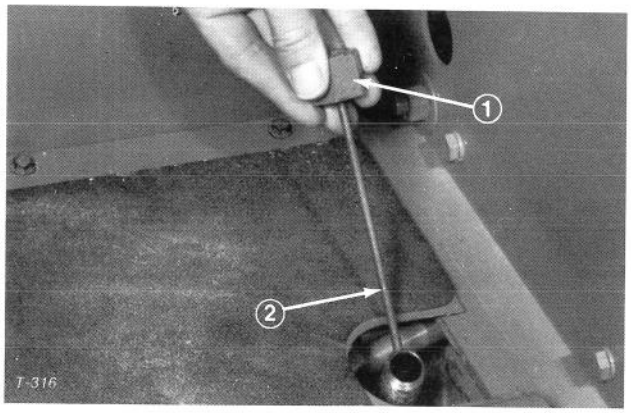

Figure 20

1. Dipstick cap 2. Groove

CONTROLS

Traction Pedal (Fig. 21) – Traction pedal has two functions; one is to make the machine move forward, the other is to make it move backward. Using the heel and toe of the right foot, depress top of pedal to move forward and bottom of pedal to move backward. Ground speed is proportionate to how far pedal is depressed. For maximum ground speed with no load, traction pedal must be fully depressed while throttle is in FAST position. Maximum speed forward is approximately 9.5 mph (15 km/hr). To get maximum power under heavy load or when ascending a hill, have throttle in FAST position while depressing traction pedal slightly to keep engine rpm high. When engine rpm begins to decrease, release traction pedal slightly to allow engine rpm to increase.

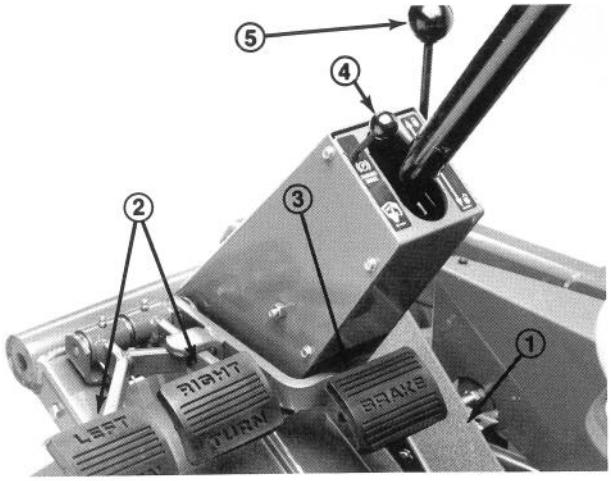

Figure 21

1. Traction pedal
2. Turn pedals
3. Brake pedal
4. Parking brake knob
5. Tilt steering control

CAUTION

When foot is removed from the traction pedal, machine should stop; it must not creep in either direction. If machine does creep, do not operate until neutral assembly has been repaired and adjusted; refer to Adjusting Traction Drive For Neutral, page 30.

Turn Pedals (Fig. 21) – The left and right turn pedals are connected to the left and right front wheel brakes. Since both brakes work independently of each other, the brakes can be used to turn sharply or to increase traction if one wheel tends to slip while operating on a hillside. However, wet grass or soft turf could be damaged when brakes are used to turn.

Tilt Steering Control (Fig. 21) — Lever on right side of steering column. Pull lever rearward to, adjust steering wheel to desired fore or aft operating position and push lever forward to lock adjustment.

Brake Pedal (Fig. 21) – Whenever the engine is shut off, the parking brake must be engaged to prevent accidental movement of the machine.

⚠ The hydrostatic transmission will not, at any time, act as a parking brake for the machine. To engage parking brake, push down fully on brake pedal and pull parking brake knob out; then release the pedal. To release parking brake, depress brake pedal until parking brake knob retracts. To stop quickly, remove right foot from traction pedal and depress the brake pedal. To permit straight stops, brake cables must be evenly adjusted.

Lift Lever (Fig. 22) – The hydraulic lift lever has three positions: FLOAT, TRANSPORT and RAISE. To lower implement to the ground, move lift lever forward into notch, which is the FLOAT position. The FLOAT position is used for operation and also when machine is not in operation. To raise implement, pull lift lever backward to the RAISE position. After implement is raised, allow lift lever to move to the TRANSPORT position. Normally, implement should be raised when driving from one work area to another, except when descending steep slopes.

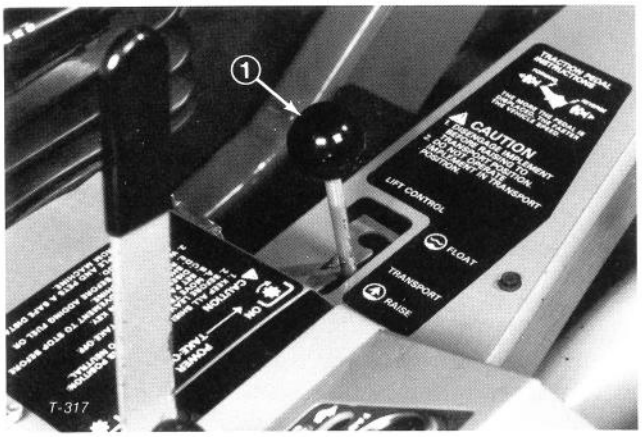

Figure 22

1. Lift lever

CAUTION

Never raise implement or cutting unit while blades or other components are rotating. The exposed, rotating blades are hazardous.

PTO Lever (Fig. 23) – The PTO lever has two positions: ON, engage and OFF, disengage. Slowly push PTO lever fully forward to ON position to start the implement or cutting unit blades. Slowly, pull lever backward to OFF position to stop implement operation. The only time PTO lever should be in the ON position is when implement or cutting unit is down in operating position.

CONTROLS

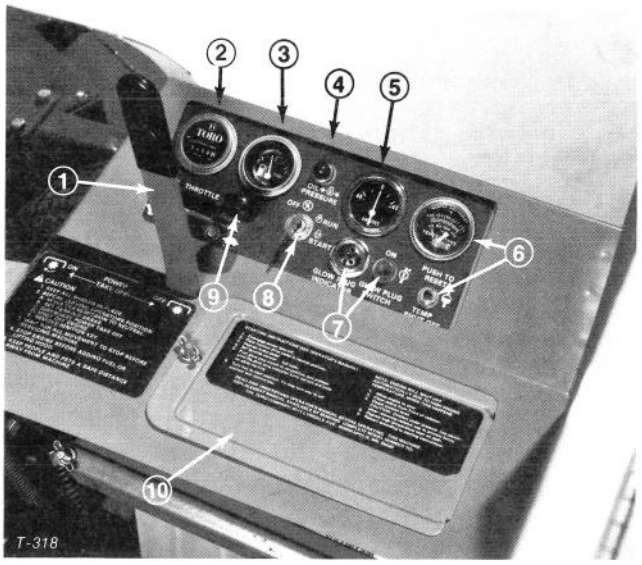

Figure 23

1. *PTO lever*
2. *Hour meter*
3. *Fuel gauge*
4. *Oil pressure indicator*
5. *Ammeter*
6. *Temp gauge and reset*
7. *Glow plug switch and indicator*
8. *Key switch*
9. *Throttle control*
10. *Battery cover*

Hour Meter (Fig. 23) – The hour meter registers accumulated hours of engine operation. Use the hour meter to determine intervals for service maintenance and lubrication.

Fuel Gauge (Fig. 23) – Indicates quantity of fuel remaining in fuel tank.

Oil Pressure Warning Light (Fig. 23) – The oil pressure warning light will glow and a buzzer will sound when oil pressure in engine drops below a safe level. If low oil pressure ever occurs, stop engine and determine the cause. Repair the damage before starting the engine again.

Ammeter (Fig. 23) – Ammeter shows charge rate of the battery by the alternator. When engine is running, there usually is a slight charge, unless engine is idling slowly. Needle will point to 0 when battery is fully charged. By contrast, alternator is not charging the battery when needle points to (-) negative side of ammeter, and if this happens, repair the charging system to prevent discharge of the battery.

Temperature Switch/Gauge and Reset Button (Fig. 23) – The temperature switch/gauge registers the temperature of the coolant in the cooling system. If temperature of coolant gets too high the engine will shut off automatically. When this happens, rotate ignition key to OFF. Automatic shut-off of the engine usually results from debris on front of screen or radiator, which reduces air flow. After cleaning outside of screen and radiator or repairing some other damage, press the reset button and start the engine.

IMPORTANT: If the switch ever must be overridden because of an emergency, the engine can be started and will continue to run while reset button is held in.

Glow Plug Switch and Indicator (Fig. 23) – Use to preheat engine cylinders before and during starting procedures. Push switch lever upward and hold while watching indicator. Indicator will glow red when sufficiently heated. Length of time necessary to preheat cylinders should be determined by atmospheric temperature; refer to Starting/Stopping Engine, page 20.

Key Switch (Fig. 23) – The key switch, which is used to start and stop the engine, has three positions: OFF, RUN and START. Rotate key clockwise to the START position to engage starter motor. When engine starts, release key and it will move automatically to the ON position. To shut engine off, rotate key counterclockwise to the OFF position.

Throttle Control (Fig. 23) – Throttle is used to operate engine at various speeds. Moving throttle forward increases engine speed – FAST; backward decreases engine speed – SLOW. The throttle regulates the speed of the cutter blades or other implement components and, in conjunction with traction pedal, controls ground speed of the traction unit.

Electrical System Fuses (Fig. 24) – An engine temperature reset relay fuse – SFE 14 amp – is located at the rear of the reset relay. An inline fuse – AGC 10 amp – is also incorporated to protect the engine control module. Access to the fuses can be gained by removing the instrument panel cover.

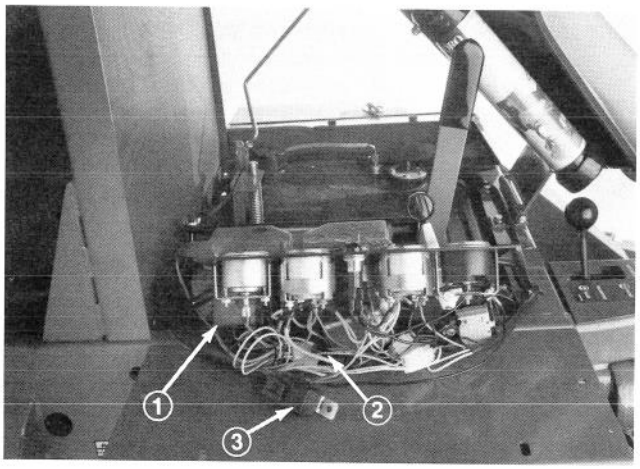

Figure 24

1. *SFE 14 amp fuse — Engine temperature reset relay*
2. *Inline AGC 10 amp fuse — Engine control module*
3. *Engine start relay*

A 40 amp circuit breaker is also incorporated to protect the entire wiring circuit. A reset button is located on the lower side of the panel, which can be reached after removal of the battery cover (Fig. 23, 25). The button should be depressed if a total loss of all electrical functions should occur. However, the electrical system should first be checked to ascertain the reason for the malfunction.



Figure 25

1. Circuit breaker reset button

Engine Stop Lever (Fig. 26) – Located on the lower right side of the engine inboard of the air cleaner assembly. Provided as a means to stop the fuel flow, thereby stopping the engine, if an electrical malfunction should occur. Use only for emergencies.

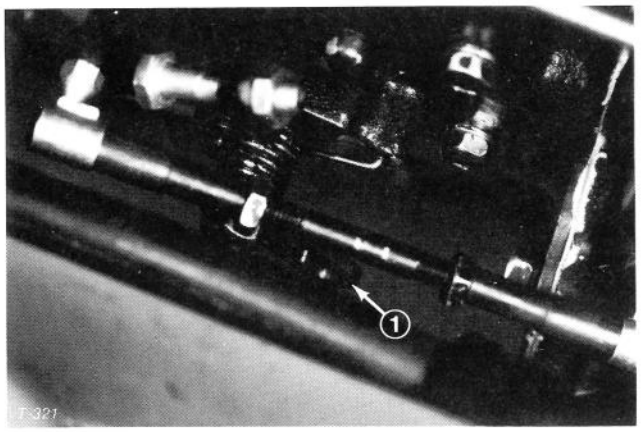

Figure 26

1. Engine stop lever

Seat Adjusting Levers (Fig. 27) – To adjust standard seat, push lever backward and slide seat to the desired position. Release lever to lock seat in place. The suspension seat may be adjusted forward or rearward by pulling out the lever at the right side of the seat, sliding the seat to the desired position, and releasing the lever. The weight adjustment knob may be adjusted for any operator's comfort.

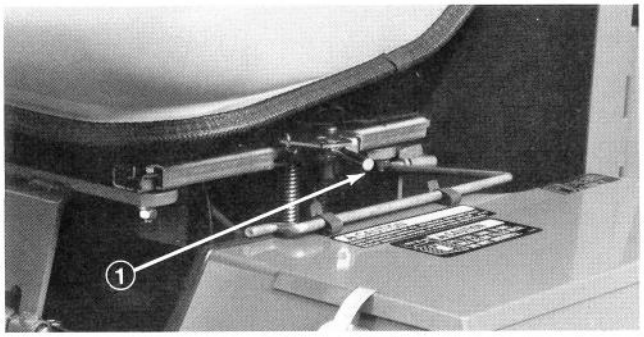

Figure 27

1. Seat adjusting lever

OPERATING INSTRUCTIONS

STARTING/STOPPING ENGINE

IMPORTANT: The fuel system must be bled if any of the following situations have occurred:

A. **Initial start up of a new machine.**

B. **Engine has ceased running due to lack of fuel.**

C. **Maintenance has been performed upon fuel system components; i.e., filter replaced, separator serviced, etc.**

Refer to Bleeding Fuel System, page 20.

1. Ensure parking brake is set, PTO lever is in OFF position (Fig. 23) and lift lever is in TRANSPORT or FLOAT position (Fig. 22). Remove foot from traction pedal and insure it is in neutral.

2. Move throttle control (Fig. 23) to full FAST position.

3. Push glow plug switch to ON position and hold until indicator glows red. Continue to hold switch in position for suggested interval and turn key in key switch to START position. Release glow plug switch after engine starts and allow key to return to RUN position. Move throttle control to SLOW position.

NOTE: Refer to chart indicating approximate preheat time suggested in various temperature ranges.

Temperature	Preheat time (sec)
above 41°F (5°C)	10
23°F (-5°C)	20
below 23°F (-5°C)	30

Note: Do not run starter motor more than 10 seconds at a time or premature starter failure may result. If engine fails to start after 10 seconds, turn key to OFF position, recheck controls and procedures, wait 10 additional seconds and repeat starter operation.

4. Turn key in key switch to START position (Fig. 23). Release key immediately when engine starts and allow it to return to RUN position. Move throttle control to SLOW position.

NOTE: Do not exceed 1 minute of continuous use or glow plug may be prematurely burnt out.

5. When engine is started for the first time, or after overhaul of the engine, transmission or axle, operate the machine in forward and reverse for one to two minutes. Also operate the lift lever and PTO lever to assure proper operation of all parts. Turn steering wheel to the left and right to check steering response, Then shut engine off and check for oil leaks, loose parts and any other noticeable difficulties.

CAUTION

Shut engine off and wait for all moving parts to stop before checking for oil leaks, loose parts or other difficulties.

6. To stop engine, move throttle control backward to SLOW position, move PTO lever to OFF position and rotate ignition key to OFF. Remove key from switch to prevent accidental starting.

BLEEDING FUEL SYSTEM

1. Unlatch and raise hood over engine.

2. Loosen air bleed screw on top of fuel filter/water separator (Fig. 28).

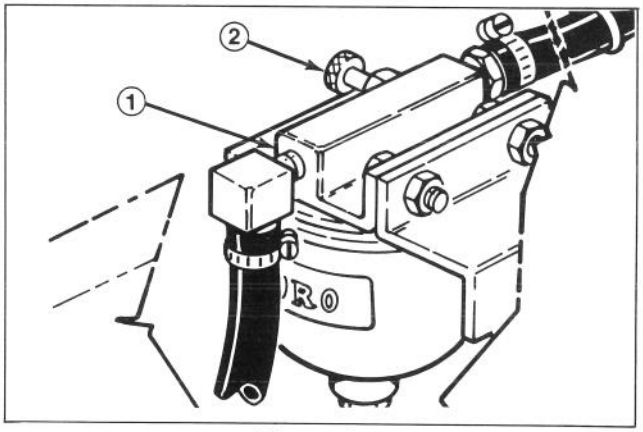

Figure 28

1. Fuel filter/water separator 2. Bleed screw

3. Turn key in ignition switch to the RUN position. Electric fuel pump will begin operation, thereby forcing air out around air bleed screw. Leave key in RUN position until solid stream of fuel flows out around screw. Tighten screw and turn key to OFF.

4. Open the air bleed screw on the fuel injection pump (Fig. 29) with a 12 mm wrench.

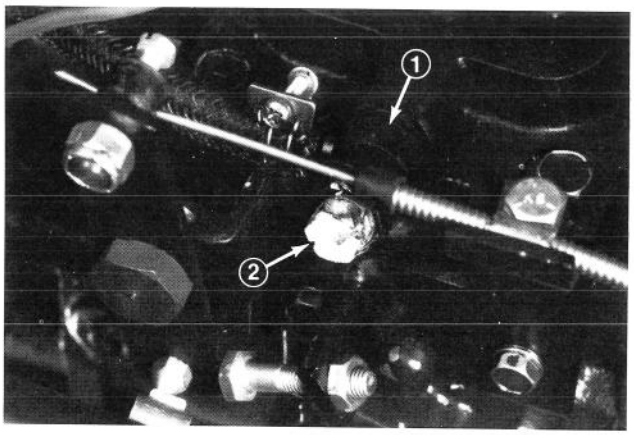

Figure 29

1. Fuel injection pump 2. Air bleed screw

5. Turn key in ignition switch to the RUN position. Electric fuel pump will begin operation, thereby forcing air out around air bleed screw on fuel injection pump. Leave key in RUN position until solid stream of fuel flows out around the screw. Tighten screw and turn key to OFF.

Note: Normally, engine should start after above bleeding procedures are followed. However, if engine does not start, air may be trapped between injection pump and injectors; refer to Bleeding Air From Injectors, page 28.

CHECKING INTERLOCK SWITCHES

The machine has interlock switches in the electrical system. These switches are designed to stop the engine when operator gets off the seat while either the PTO lever is engaged or traction pedal is depressed. However, operator may get off the seat while engine is running. Although engine will continue to run if PTO lever is disengaged and traction pedal is released, it is strongly recommended that the engine be stopped before dismounting from the seat.

CAUTION

Do not disconnect the interlock switches. Check operation of switches daily to assure interlock system is operating correctly. If a switch is malfunctioning, replace it before operating the machine. To ensure maximum safety, replace all switches after every two years or 1000 hours, whichever comes first.

To check operation of interlock switches:

1. Move PTO lever to OFF position and remove foot from traction pedal so it is fully released.

2. Try to start the engine. If engine starts, proceed to step 3. If engine does not crank there may be a malfunction in the electrical system.

3. Raise off the seat and move PTO lever to ON position while the engine is running. The engine should stop. If engine stops, the PTO switch is operating correctly; thus, proceed to step 4. If engine does not stop there is a malfunction in the safety interlock system.

WARNING

Do not operate machine without implement unless the PTO driveshaft is also removed.

4. Move PTO lever to OFF position. Raise off the seat and depress traction pedal slowly while engine is running. The engine should stop. If engine stops, the neutral switch is operating correctly. If engine does not stop, there is a malfunction in the electrical system.

5. If all the switches operated correctly, the machine can be operated.

PUSHING OR TOWING TRACTION UNIT

In an emergency, the traction unit can be pushed or towed for a very short distance. However, Toro does not recommend this as standard procedure.

IMPORTANT: Do not push or tow the traction unit faster than 2 to 3 mph (3 to 4.8 km/hr) because transmission may be damaged. If traction unit must be moved a considerable distance, transport it on a truck or trailer. Whenever traction unit is pushed or towed, by-pass valve must be open.

1. Reach under traction unit and rotate by-pass valve (Fig. 30) 1/2 to 1 turn counterclockwise. Opening the valve opens an internal passage in the transmission, thereby by-passing transmission oil. Because fluid is by-passed, traction unit can be moved without damaging the transmission.

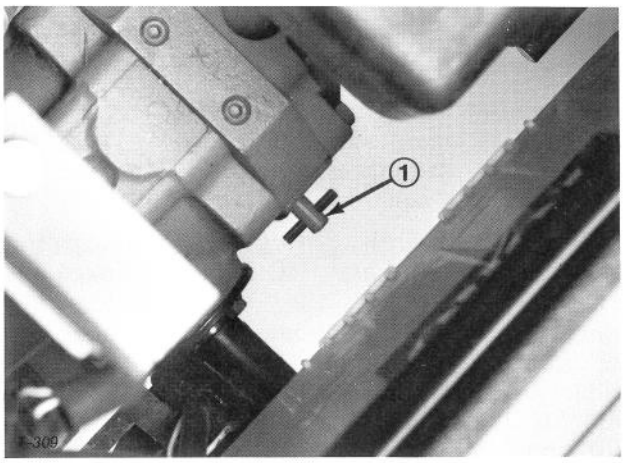

Figure 30

1. By-pass valve

OPERATING INSTRUCTIONS

2. Before starting engine, close by-pass valve by rotating it clockwise until it is securely seated. Do not exceed 5 to 8 ft-lb (7-11 N·m). Do not start engine when valve is open.

IMPORTANT: Running the machine with by-pass valve open will cause the transmission to overheat.

OPERATING CHARACTERISTICS

Practice driving the GROUNDSMASTER 322-D because it has a hydrostatic transmission and its characteristics are different than many turf maintenance machines. Some points to consider when operating the traction unit, cutting unit or other implement are the transmission, engine speed, load on the cutting blades or other implement components, and the importance of the brakes.

To maintain enough power for the traction unit and implement while operating, regulate traction pedal to keep engine rpm high and somewhat constant. A good rule to follow is; decrease ground speed as the load on the implement increases; and increase ground speed as the load decreases.

Therefore, allow traction pedal to move backward as engine rpm decrease, and depress pedal slowly as rpm increase. By comparison, when driving from one work area to another – with no load and cutting unit raised – have throttle in FAST position and depress traction pedal slowly but fully to attain maximum ground speed.

Another characteristic to consider is the operation of the turning pedals that are connected to the brakes. The brakes can be used to assist in turning the machine; however, use them carefully, especially on soft or wet grass because the turf may be torn accidentally. Another benefit of the turning brakes is to maintain traction. For example: in some slope conditions, the uphill wheel slips and loses traction. If this situation occurs, depress uphill turn pedal gradually and intermittently until the uphill wheel stops slipping; thus, increasing traction on the downhill wheel.

Before stopping the engine, disengage all controls and move throttle to SLOW. Moving throttle to SLOW reduces high engine rpm, noise and vibration. Turn key to OFF to stop engine.

The grass deflector must always be installed and in lowest position on the side discharge cutting unit.

WARNING

This product is designed to drive objects into the ground where they lose energy quickly in grassy areas. However, when a person or pet appears suddenly in or near mowing area, STOP MOWING.

Careless operation, combined with terrain angle, ricochets, or improperly positioned safety guards can lead to thrown object injuries. Do not resume mowing until area is cleared.

LUBRICATION MAINTENANCE

GREASING BEARINGS, BUSHINGS, GEAR BOX AND BRAKE CABLES

The traction unit must be lubricated regularly. If machine is operated under normal conditions, lubricate all bearings and bushings after every 50 hours of operation.

1. The traction unit bearings and bushings that must be lubricated are: PTO shaft and yokes (Fig. 31); lift arm pivots (Fig. 32); right and left push arm ball joints (Fig. 31); push arm pivot bushings (Fig. 33); PTO pivot housing blocks (Fig. 34); brake pivot bushings (Fig. 35); rear wheel spindle bushings (Fig. 36, 37); steering plate bushings (Fig. 37); axle pin pushing (Fig. 37); and engine output shaft bearing (Fig. 38). Also apply grease to both brake cables at the drive wheel and brake pedal ends.

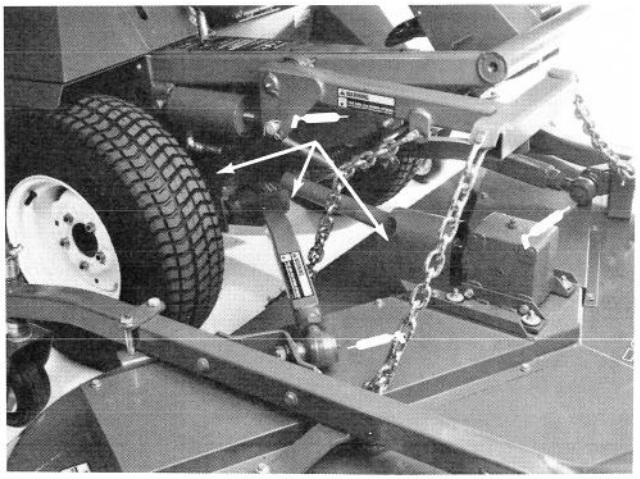

Figure 31

LUBRICATION MAINTENANCE

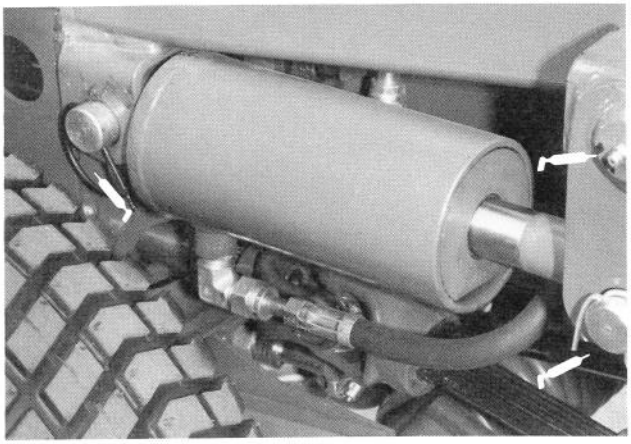

Figure 32

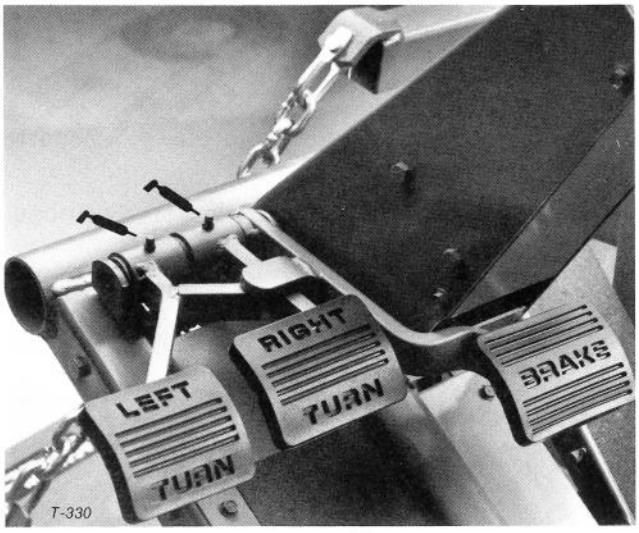

Figure 35

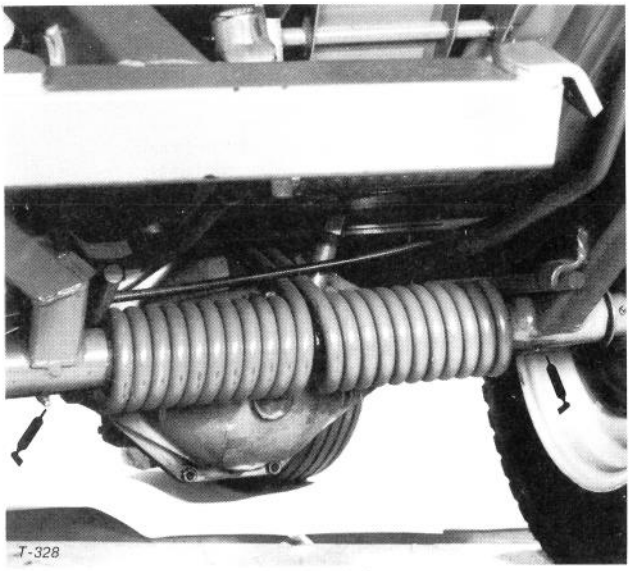

Figure 33

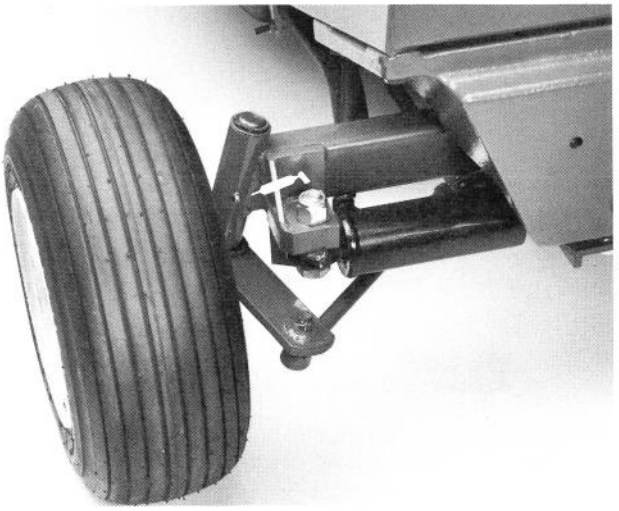

Figure 36

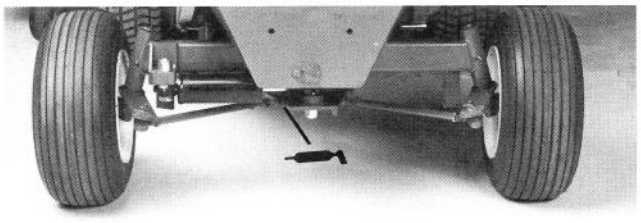

Figure 37

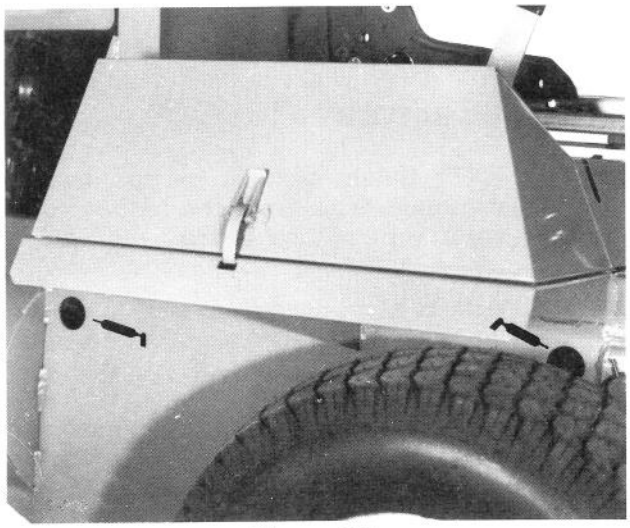

Figure 34

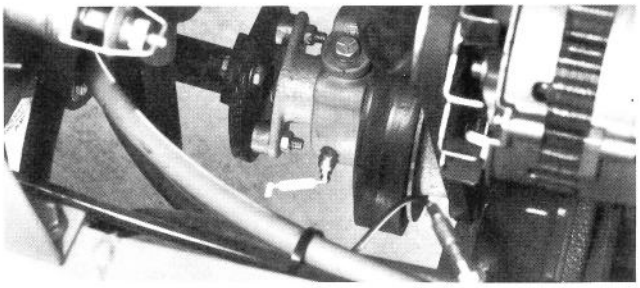

Figure 38

ELECTRICAL MAINTENANCE

REPLACING SEAT SWITCH

1. Raise seat and hold it up with seat support rod.

2. (Model 30739 only) Remove (2) flange screws securing sealing plate to frame above fuel tank. Remove sealing plate.

3. Remove instrument cover, disconnect negative battery cable from battery and separate wire harness connectors (Fig. 39). Remove capscrew and locknut (Fig. 39) and lift switch up to disengage locating pin on bottom of switch from hole in mounting bracket.

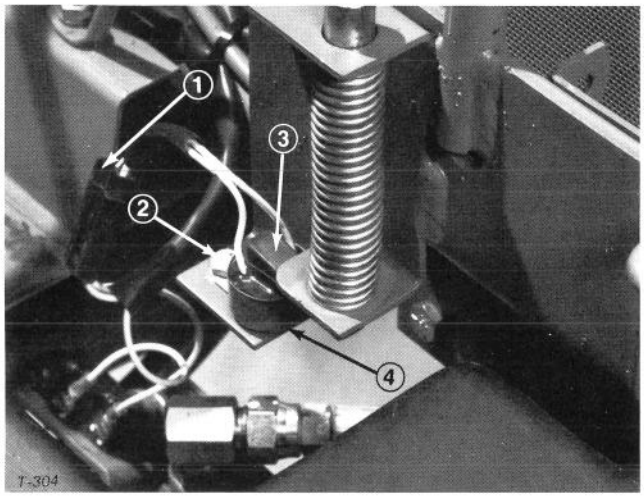

Figure 39

1. *Connectors*
2. *Capscrew and locknut*
3. *Switch*
4. *Mounting bracket*

4. To install new switch, set it on mounting bracket (Fig. 39) and assure locating pin on bottom of switch fits into hole in bracket. Secure switch in place with capscrew and locknut.

5. Liberally coat inside of connectors with Grafo 112X (skin-over) grease, Toro Part No. 505-47 and push wire harness connectors together.

6. (Model 30739 only) Reinstall sealing plate to frame above fuel tank.

7. Disengage support rod from seat and move seat to its normal position. Install lynch pin through the rod to hold seat in place and reconnect negative battery cable to battery.

REPLACING PTO SWITCH

1. Disengage latches and remove instrument cover.

2. Disconnect negative battery cable from battery and separate wire harness connectors (Fig. 40).

3. Move PTO lever to the ON position and remove capscrew and locknut holding switch against mounting bracket (Fig. 40).

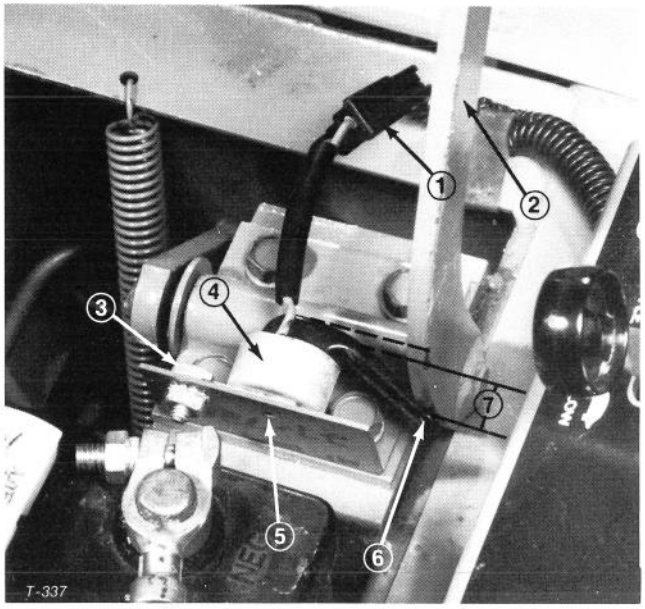

Figure 40

1. *Connectors*
2. *PTO lever*
3. *Capscrew and locknut*
4. *Switch*
5. *Mounting bracket*
6. *Switch arm*
7. *1/2 inch (13 mm)*

4. Install new switch with capscrew and locknut. Move PTO lever to OFF position. When lever is in its normal, released position, the switch arm must bend about 1/2 inch (13 mm) (Fig. 40). If switch arm does not bend 1/2 inch (13 mm), bend the mounting bracket to get the correct adjustment.

5. Liberally coat inside of connectors with Grafo 112X (skin-over) grease, Toro Part No. 505-47, push wire harness connectors together and reconnect negative battery cable to battery.

6. Install instrument cover and lock the latches.

SERVICING BATTERY

IMPORTANT: Before welding on the machine, disconnect ground cable from the battery to prevent damage to the electrical system.

Note: Check battery condition weekly or after every 50 hours of operation. Keep terminals and entire battery case clean because a dirty battery will discharge slowly. To clean the battery, wash the entire case with solution of baking soda and water. Rinse with clear water. Coat the battery posts and cable connectors with Grafo 112X (skin-over) grease, Toro Part No. 505-47 or petroleum jelly to prevent corrosion.

AIR CLEANER MAINTENANCE

GENERAL MAINTENANCE PRACTICES

Inspect air cleaner and hose periodically to maintain maximum engine protection and to ensure maximum service life.

1. Assure hose between air cleaner and carburetor is clamped securely in place. Replace the hose if it is cracked or punctured.

2. Check air cleaner body for dents and other damage which could possibly cause an air leak. Replace a damaged air cleaner body.

3. Insure dust cap is sealing around bottom of air cleaner body.

4. Mounting screws and nuts holding air cleaner in place must be tight.

5. Inlet cap must be free of obstructions.

SERVICING DUST CUP AND BAFFLE

Inspect the dust cup and rubber baffle once a week or every 50 hours operation; however, daily or more frequent inspection is required when operating conditions are extremely dusty and dirty. Never allow dust to build up closer than one inch (25 mm) from the rubber baffle.

Note: If conditions are extremely dusty and dirty, begin by checking dust cup and baffle after each day's operation to establish approximately how long an interval passes before dust cup should be emptied. Base further maintenance requirements on this figure. These conditions may be particularly prevalent if the rear discharge cutting unit is attached.

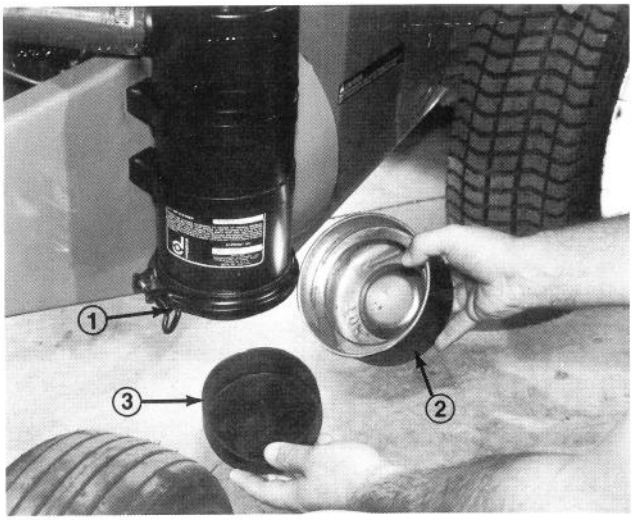

Figure 41

1. Thumb screw
2. Dust cup
3. Baffle

1. Loosen thumb screw until dust cup and baffle can be removed (Fig. 41). Separate dust cup and baffle (Fig. 41).

2. Dump dust out of the dust cup. After cleaning cup and baffle, assemble and reinstall both parts.

SERVICING AIR CLEANER FILTER

Service the air cleaner filter every 250 hours or more frequently in extreme dusty or dirty conditions by washing or using compressed air. Replace the element after every six cleanings (1500 hours) or annually, whichever comes first.

1. Remove and service dust cup; refer to Servicing Dust Cup and Baffle, page 25.

2. Remove wing nut w/gasket and slide filter element out of air cleaner body (Fig. 42).

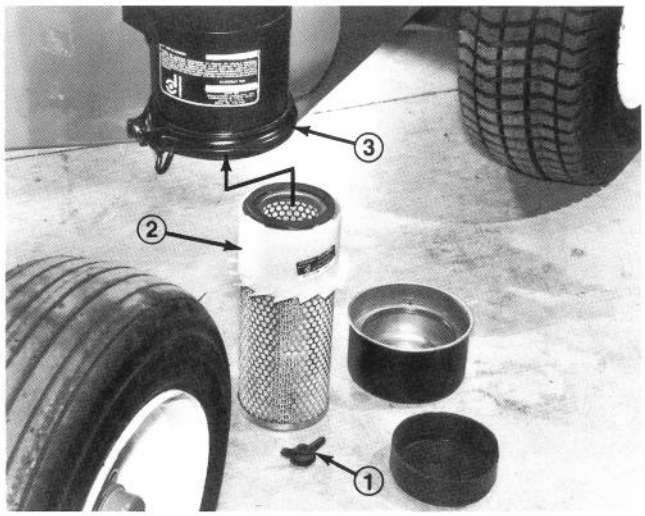

Figure 42

1. Wing nut with gasket
2. Filter element
3. Air cleaner body

3. Clean the element by washing it in a solution of filter cleaner (Part No. 27-7220, available from Toro) and water, or blow dirt out of filter by using compressed air.

Note: Compressed air is recommended when element must be used immediately after servicing because a washed element must be dried before it is used. By comparison, washing the element cleans better than blowing dirt out with compressed air. Remember though, filter must be washed when exhaust soot is lodged in the filter pores.

Washing Method

IMPORTANT: Do not remove plastic fin assembly because washing removes dust from beneath fins.

AIR CLEANER MAINTENANCE

A. Prepare a solution of filter cleaner and water and soak filter element about 15 minutes. Refer to directions on filter cleaner carton for complete information.

B. After soaking filter for 15 minutes, rinse it with clear water. Maximum water pressure must not exceed 40 psi (276 kPa) to prevent damage to the filter element.

C. Dry filter element using warm, flowing air (160°F (71°C) max). or allow element to air-dry. Do not use compressed air or a light bulb to dry the filter element because damage could result.

Compressed Air Method

IMPORTANT: Do not remove plastic fin assembly because back-blowing with compressed air removes dust from beneath fins.

A. Blow compressed air from inside to the outside of dry filter element. Do not exceed 100 psi (689 kPa) to prevent damage to the element.

B. Keep air hose nozzle at least one inch (25 mm) from pleated paper, and move nozzle up and down while rotating the filter element. Inspect element when dust and dirt are removed; refer to Inspecting Filter Element, page 26.

4. Wipe inside of air cleaner body with a damp cloth to remove excess dust. Slide filter into air cleaner body and secure it in place with wing nut and gasket.

5. Reinstall dust cup and baffle. Move thumb screw behind air cleaner body and tighten it securely.

INSPECTING FILTER ELEMENT

1. Place bright light inside filter.

2. Rotate filter slowly while checking for cleanliness, ruptures, holes and tears. Replace defective filter element.

3. Check fin assembly, gasket and screen for damage. Replace filter if damage is evident.

ENGINE MAINTENANCE

CLEANING RADIATOR AND SCREEN

The screen and front of the radiator must be kept clean to prevent the engine from overheating. Normally, check the screen and front of radiator daily and, if necessary, clean any debris off these parts. However, it will be necessary to check and to clean the screen each quarter hour and radiator checked every hour in extremely dusty and dirty conditions. **Note:** This situation may be particularly prevalent if the rear discharge cutting unit is being used. The front of the radiator can be cleaned thoroughly by spraying with a water hose or blowing with compressed air from the fan side of the radiator. Make sure to clean out any debris that settles to the bottom of the screen. The screen in front of radiator can be removed – by loosening wing nuts at top of screen – to make cleaning easier.

CHANGING CRANKCASE OIL AND FILTER

Check oil level after each days operation or each time machine is used. Change oil after every 50 hours of operation; change oil filter after first 50 hours and every 100 hours operation thereafter. However, change oil more frequently when engine is operated in dusty or sandy conditions. If possible, run engine just before changing oil because warm oil flows better and carries more contaminants than cold oil.

1. Position machine on a level surface.

2. Disengage hood latch and open the hood. Set drain pan under the housing and in line with drain plug (Fig. 43).

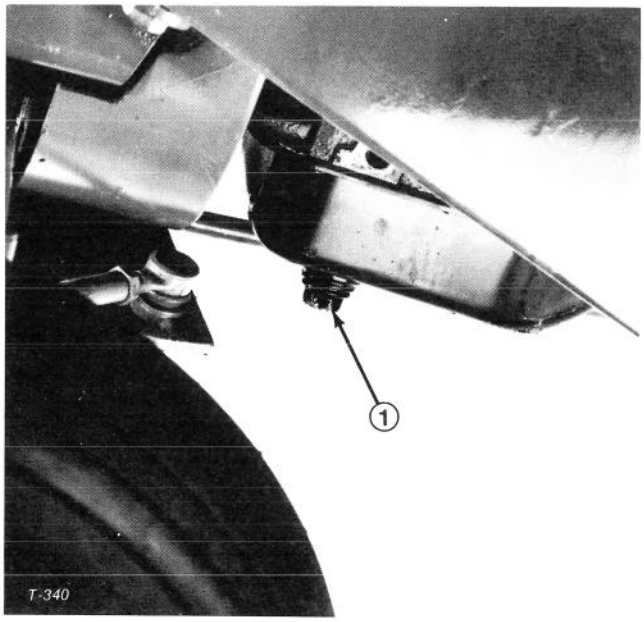

Figure 43

1. Oil drain plug

3. Clean area around drain plug.

4. Remove oil drain plug and allow oil to flow into drain pan. Remove and replace oil filter (Fig. 45); refer to parts catalog for part number.

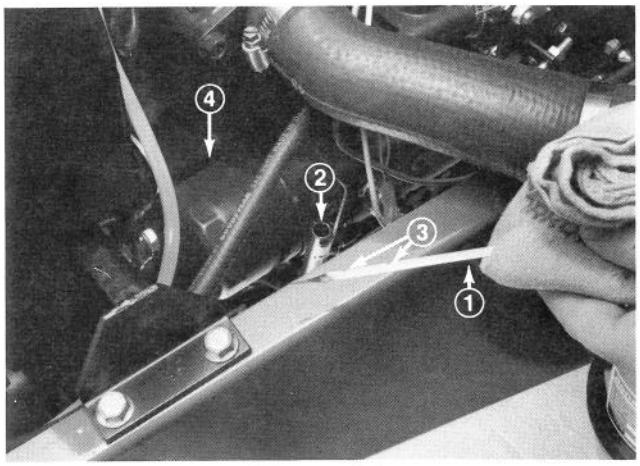

Figure 44

1. Dipstick
2. Dipstick tube
3. Keep oil level between notches
4. Engine oil filter

5. After oil is drained, reinstall drain plug and wipe up any oil that spilled.

6. Fill crankcase with oil; refer to Check Crankcase Oil, page 14.

SERVICING FUEL SYSTEM

Note: Refer to Fill Fuel Tank With Diesel Fuel, page 15, for proper fuel recommendations.

Fuel Tank

Drain and clean fuel tank every 400 hours operation or yearly, whichever comes first. Also, drain and clean tank if fuel system becomes contaminated or if machine is to be stored for an extended period. Use clean fuel oil to flush out the tank.

Fuel Lines and Connections

Check lines and connections every 400 hours or yearly, whichever comes first. Inspect for deterioration, damage or loose connections.

Fuel Filter/Water Separator

Drain water or other contaminants from fuel filter/water separator (Fig. 45) daily by loosening drain plug on filter canister. Tighten plug after draining. Replace filter canister after every 400 hours of operation.

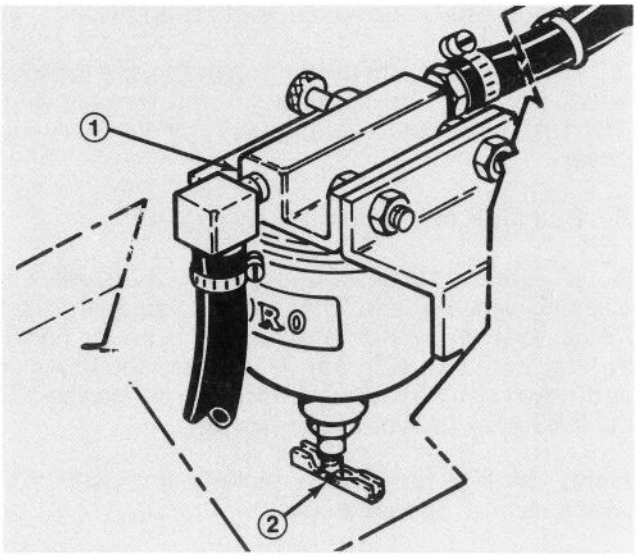

Figure 45

1. Fuel filter/water separator
2. Drain plug

1. Clean area where filter canister mounts.

2. Remove filter canister and clean mounting surface.

3. Lubricate gasket on filter canister with 10W-40 SF/CC oil.

4. Install filter canister by hand until gasket contacts mounting surface, then an additional 1/2 turn.

Fuel Pump Filter

Remove and replace the filter after every 400 hours operation.

1. Fuel pump is located on inner frame bulkhead to left of drive coupling assembly (Fig. 46).

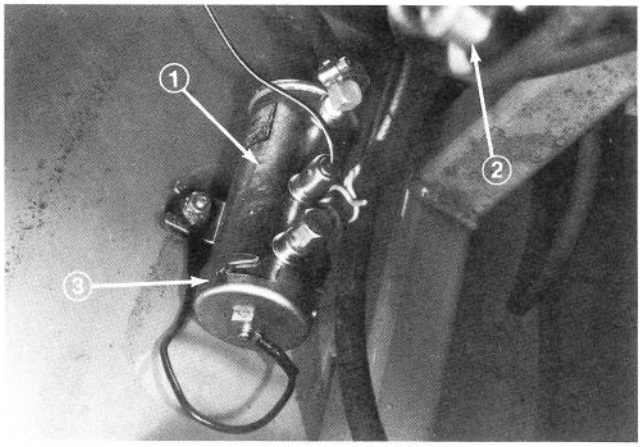

Figure 46

1. Fuel pump assembly
2. Drive coupling assembly
3. Fuel pump cover

2. Thoroughly clean outside of assembly.

3. Place a drain pan under fuel pump and remove cover from fuel pump with 17 mm wrench (Fig. 46). Take care not to damage wire while removing cover.

4. Pull filter out of pump body (Fig. 47).

5. If filter is to be cleaned, wash thoroughly in cleaning solvent and blow compressed air from inside toward outside of element. Hold air nozzle at least one inch (25 mm) from filter and move up and down while rotating filter. Do not exceed 100 psi (689 kPa) to avoid filter damage.

Note: Replace the filter if there is any visible dirt which cannot be washed out.

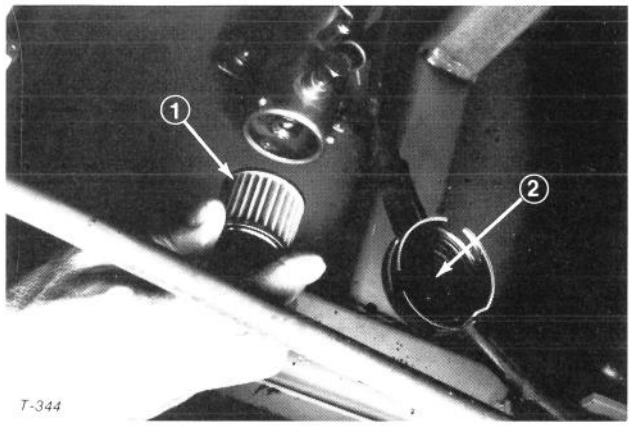

Figure 47

1. Filter 2. Magnet

6. Clean magnet of any residue (Fig. 47), insert filter into body and install cover (Fig. 46).

7. Inspect the two rubber gaskets; replace them if damaged.

8. Bleed the fuel system; refer to Bleeding Fuel System, page 20.

BLEEDING AIR FROM INJECTORS

Note: This procedure should be used only if fuel system has been purged of air through normal priming procedures and engine still will not start; refer to Bleeding Fuel System, page 20.

1. Loosen the pipe connection to the No. 1 nozzle and holder assembly.

2. Move throttle control to full FAST position.

3. Turn key in key switch to START position and watch fuel flow around connector. Turn key to OFF position when solid flow is observed.

4. Tighten pipe connector securely.

5. Repeat steps 1-4 on No. 2 and 3 nozzles.

SERVICING ENGINE BELTS

Check tension of all belts initially after the first days operation and every 100 hours thereafter.

Alternator Belt

1. Unlatch and open hood.

2. Check tension by depressing belt midway between alternator and crankshaft pulleys. Belt should deflect 7/16 in. (11 mm). If deflection is incorrect, proceed to step 3. If correct, continue operation.

3. Loosen bolt securing brace to engine and bolt securing alternator to brace (Fig. 48).

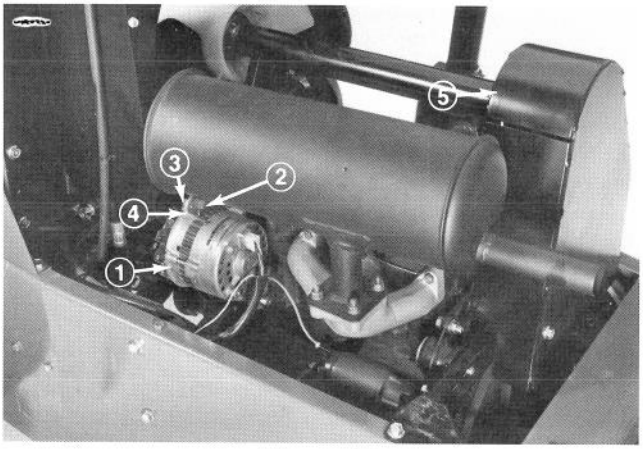

Figure 48

1. Alternator assembly
2. Engine brace bolt
3. Alternator brace bolt
4. Brace
5. Fan belt guard

4. Insert pry bar between alternator and engine and pry out on alternator (Fig. 48).

5. Hold alternator in position after proper belt tension setting is achieved and tighten alternator and brace bolts to secure adjustment.

Note: Metric wrenches will be required.

Cooling Fan Belt

1. Unlatch and open hood.

2. Remove capscrews (5) securing fan belt guard and remove guard (Fig. 48).

3. Belt should deflect 1/4 in. (6 mm) midway between the pulleys with 5 lbf (22 n) (Fig. 49). If deflection is incorrect, proceed to step 4. If correct, proceed to step 5.

4. Loosen locknut securing idler pulley (Fig. 49). Push idler pulley against belt until proper deflection is achieved and tighten idler pulley locknut (Fig. 49).

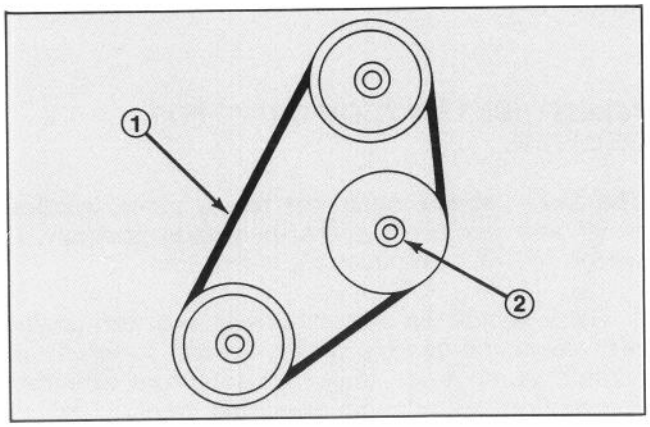

Figure 49

1. 1/4 in. (6 mm) deflection 2. Idler pulley locknut

5. Install fan belt guard and secure with capscrews (Fig. 48). Close and latch hood.

To replace belt:

1. Follow procedures in step 1 and 2 above.

2. Loosen locknut securing idler pulley, slide pulley away from belt and remove belt from top and bottom pulleys (Fig. 49).

3. Install new belt and adjust for proper tension. Push idler pulley against belt until belt deflects 1/4 inch. (6 mm) with 5 lbf (22 N) midway between top and bottom pulleys (Fig. 49). Tighten idler pulley locknut to secure adjustment (Fig. 49).

4. Install fan belt guard and secure with capscrews (Fig. 48). Close and latch hood.

Note: Check fan belt tension after first days operation. Readjust tension, if necessary. Follow regular maintenance check procedures thereafter.

CHANGING COOLANT IN COOLING SYSTEM

The cooling system must be filled with a 50/50 solution of water and permanent ethylene glycol anti-freeze. After every two years, drain the coolant from the radiator and engine by opening the drain cock and block plug. After coolant is drained, flush the entire system and refill it with a 50/50 solution of water and anti-freeze. Capacity of cooling system is approximately 6 quarts (5.7 l). When filling the radiator, level of coolant must be above the core and 1 inch (25 mm) below bottom of filler neck. DO NOT OVERFILL. Always install radiator cap securely.

SERVICING SPARK ARRESTOR MUFFLER

Every 250 hours operation, clear the muffler of carbon buildup.

1. Unlatch and raise hood assembly.

2. Remove pipe plug from cleanout port at lower side of muffler (Fig. 50).

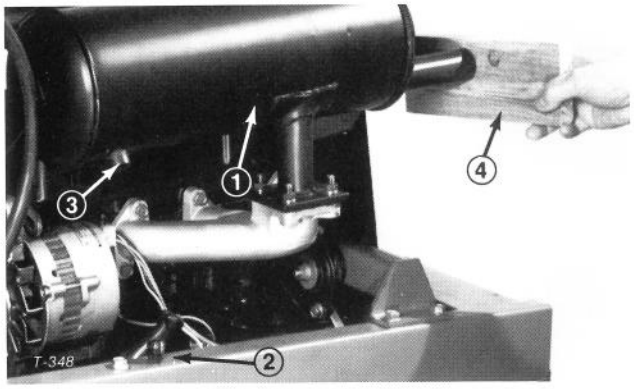

Figure 50

1. Muffler 3. Outlet port
2. Pipe plug 4. Block normal exhaust outlet

CAUTION

Be careful while working around muffler as it may be hot and could cause injury.

3. Start engine, plug the normal muffler exit with block of wood or metal plate so exhaust flow will be forced out the clean-out port (Fig. 50). Continue to block exit until carbon deposits cease coming out port.

CAUTION

Do not stand in line with the cleanout port.

4. Stop engine, replace pipe plug and lower and latch hood.

TRACTION DRIVE MAINTENANCE

ADJUSTING TRACTION CONTROL ROD

1. Check traction drive neutral position to assure front wheels do not creep; refer to Adjusting Traction Drive for Neutral, page 30.

2. Depress traction pedal fully. There must be 1/16 inch (1.6 mm) between inside front edge of pedal and triangular support brace (Fig. 51). If distance is as specified, the control rod is adjusted correctly. If distance is not as specified, proceed to step 3 for an adjustment.

3. Loosen jam nut away from front of control rod (Fig. 51). Remove cotter pin and slotted nut retaining tapered socket in pivot mount on bottom of traction pedal (Fig. 51).

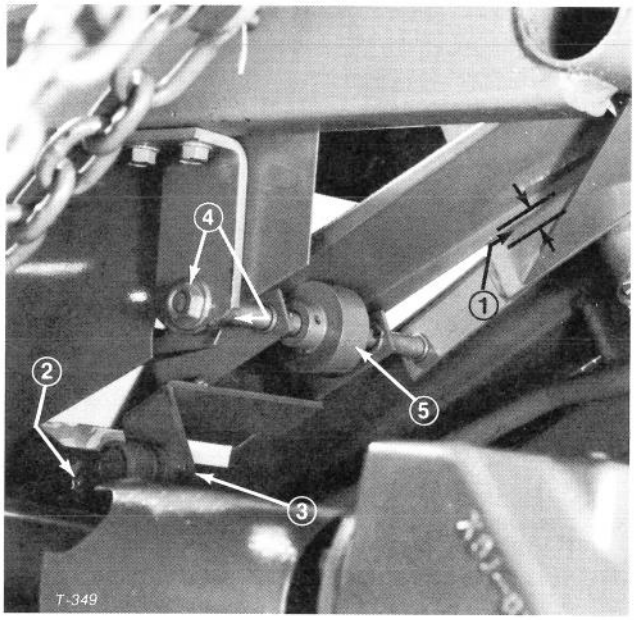

Figure 51

1. 1/16 in. (1.6 mm)
2. Jam nut
3. Cotter pin and slotted nut
4. Nuts
5. Friction wheel

4. Adjust tapered socket as required. Slide end of tapered socket through traction pedal pivot mount. Then depress pedal and check for 1/16 inch (1.6 mm) clearance between front edge of pedal and top of support brace. Adjust tapered socket until correct adjustment results.

5. After control rod is adjusted correctly, secure tapered socket and traction pedal together with slotted nut and cotter pin. Also tighten jam nut against front of control rod.

ADJUSTING TRACTION PEDAL FRICTION WHEEL

1. Loosen two nuts securing traction pedal shaft on right side of pedal (Fig. 51).

2. Rotate shaft to relocate worn surface of friction wheel away from underside of traction pedal.

3. Tighten nuts to secure shaft and wheel in position.

ADJUSTING TRACTION DRIVE FOR NEUTRAL

The front wheels must not rotate when traction pedal and pump lever are in neutral position. If wheels rotate, an adjustment is required.

1. Park vehicle on a level surface and turn engine off. Apply the parking brake, tip seat forward and actuate pump lever (Fig. 52) to insure assembly is properly seated and operating freely. Correct any discrepancy.

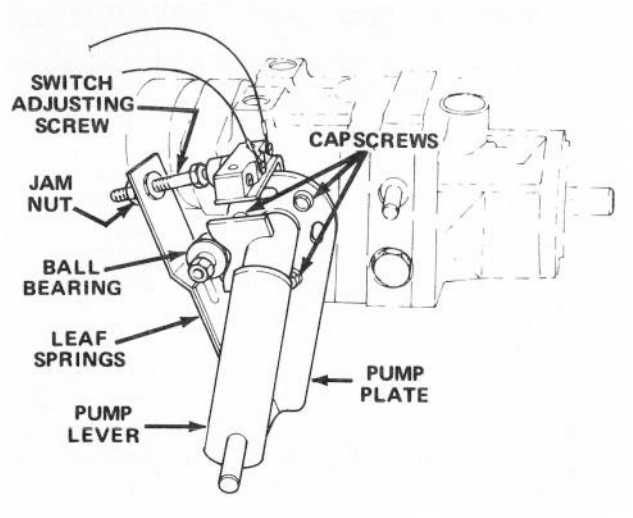

Figure 52

2. Block right front tire and both rear tires so vehicle cannot roll forward or backward.

3. Jack up frame so left front wheel is off the shop floor. Use a jack stand to support the frame.

4. Start engine and allow it to idle for 5 minutes to heat oil in transmission to operating temperature.

5. Release parking brake; then check left front wheel that is off shop floor. Wheel must not be rotating. If wheel is rotating, proceed to step 6 for an adjustment. If wheel is not rotating, proceed to step 8. Verify the adjustment with throttle in SLOW and FAST position.

6. Because the wheel is rotating, the pump plate must be adjusted. But before adjusting the pump plate, move throttle to SLOW. If wheel is rotating forward, loosen capscrews and lightly tap bottom

TRACTION DRIVE MAINTENANCE

of pump plate counterclockwise (Fig. 52). By contrast, tap pump plate clockwise if wheel is rotating backward (Fig. 52). When wheel stops rotating, tighten capscrews holding pump plate against side of transmission. Verify the adjustment with throttle in SLOW and FAST position.

7. Should front wheel continue to rotate, check for the following:

   A. Ball bearing is loose or worn out (Fig. 52).

   B. Plunger on interlock switch is sticking.

   C. Loose or missing fasteners.

   D. Worn roll pin securing pump lever to transmission.

   E. Pump lever loose on control shaft. (Correct by applying Loc-tite 271 or 601 to Shaft).

   F. Weak or damaged leaf springs (Fig. 52). Replace.

   G. Internal transmission component malfunction. Contact your local Toro distributor for assistance.

8. Shut engine off.

9. Adjust traction control rod; refer to Adjusting Traction Control Rod, page 30.

ADJUSTING TRACTION INTERLOCK SWITCH

1. Adjust transmission for neutral; refer to Adjusting Traction Drive for Neutral, page 30.

2. Actuate the pump lever (Fig. 52) to insure all parts are operating freely and seated properly.

3. Loosen jam nut. Rotate switch adjusting screw (Fig. 52) until there is a gap between head of screw and switch button.

4. Rotate adjusting screw until it contacts the switch button. Continue to rotate the screw until the circuit is completed (switch "clicks"). After the switch clicks, rotate the adjusting screw an additional 1/2 turn. Tighten jam nut.

PTO DRIVE MAINTENANCE

CORRECTING PTO DRIVE BELT SLIPPAGE

If belt begins to slip because it has stretched or because of worn linkage.

1. Unlatch and remove instrument cover.

2. Move PTO control lever to ON position.

3. Measure length of PTO spring between flatwashers (Fig. 53). There should be a spring length of 3-3/16 in. (81 mm).

4. To adjust, hold head of adjusting screw with wrench (under PTO actuating arm) and turn locknut (Fig. 53).

5. Move PTO lever to OFF position and install instrument cover.

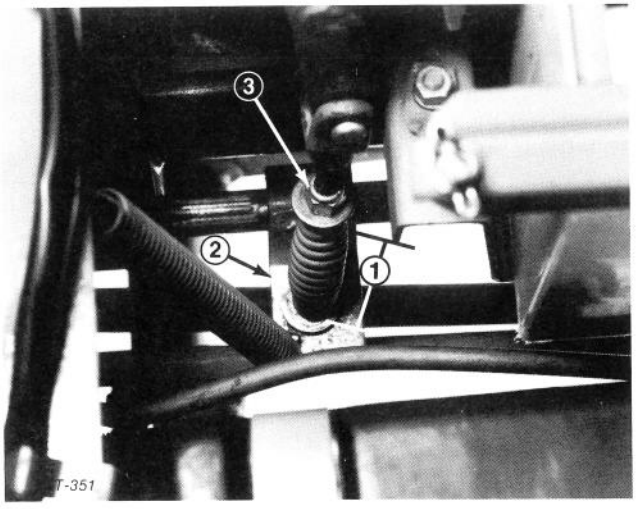

Figure 53

1. 3-3/16 in. (81 mm)
2. PTO actuating arm
3. Locknut

STEERING MAINTENANCE

ADJUST TILT STEERING CONTROL

If steering wheel tilt control lever must be adjusted, proceed as follows:

1. Remove knob from parking brake and self tapping screws from steering column cover. Slide cover up steering shaft to expose pivot bracket (Fig. 54).

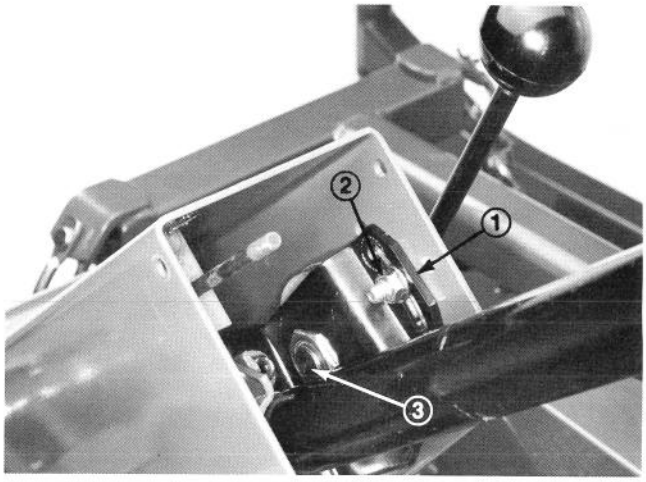

Figure 54

1. Pivot plate
2. Small nut
3. Large nut

2. Loosen small nut, rotate pivot bracket until it tightens large nut below (Fig. 54). Retighten small nut.

3. Reinstall steering column cover and parking brake knob.

ADJUSTING REAR WHEEL TOE-IN

The rear wheels should not toe-in or toe-out when they are adjusted correctly. To check the rear wheel toe-in, measure the center-to-center distance at wheel hub height, in front and in back of the rear tires. If the wheels toe-in or toe-out, an adjustment is required.

1. Rotate the steering wheel so rear wheels and steering plate are straight ahead.

2. Loosen the jam nuts on both tie rods. Adjust both tie rods until center-to-center distance at front and back of rear wheels is the same (Fig. 55).

3. When rear wheels are adjusted correctly, tighten jam nuts against tie rods.

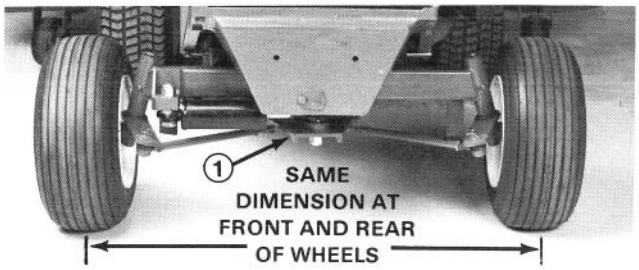

Figure 55

1. Steering plate

ADJUSTING REAR WHEEL BEARINGS

1. Jack up rear of machine until wheel is off shop floor. Use jack stands or block the machine to prevent it from falling accidentally.

2. Remove dust cap from end of wheel spindle. Also remove cotter pin retaining slotted nut in place (Fig. 56).

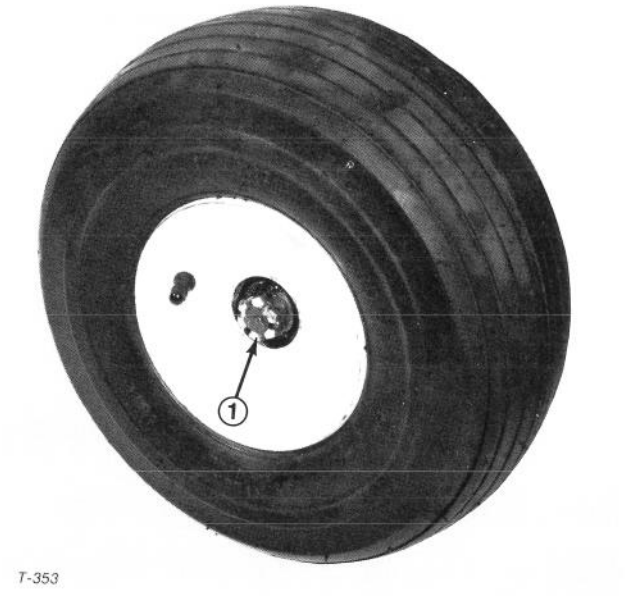

Figure 56

1. Slotted nut

3. Rotate the wheel by hand and tighten the slotted nut until the bearing binds slightly. Then loosen nut until the nearest slot and hole in spindle line up. Install the cotter pin to retain the slotted nut in place.

4. Install dust cap on end of the wheel spindle.

5. Remove jack stands and lower machine to shop floor.

BRAKE MAINTENANCE

ADJUSTING BRAKES

WARNING

THE ASBESTOS BRAKE LININGS CONTAIN ASBESTOS FIBERS. BREATHING ASBESTOS DUST MAY BE HAZARDOUS TO YOUR HEALTH AND MAY CAUSE SERIOUS RESPIRATORY OR OTHER BODILY HARM.

Avoid creating dust. Do not remove brake drum, work on brake linings, replace brake linings or attempt to sand, grind, chisel, file, hammer, or alter brake linings in any manner without PROPER PROTECTIVE EQUIPMENT.

Adjust the service brakes when there is more than one inch (25 mm) of "free travel" of the turn pedals, or when the brakes do not work effectively. Free travel is the distance the brake pedal moves before braking resistance is felt.

The brakes should only need adjusting after considerable use, and these periodic adjustments can be performed where the brake cables connect to the brake pedal mount. When the cables are no longer adjustable, the star nut on inside of the brake drum must be adjusted to move the brake shoes outward. However, the brake cables must be adjusted again to compensate for this adjustment.

1. To reduce free travel of turn pedals – tighten the brakes – loosen front nut on threaded end of brake cable (Fig. 57). Then tighten rear nut to move cable backward until turn pedals have 1/2 to 1 inch (13 to 25 mm) of free travel. Tighten front nut after brakes are adjusted correctly.

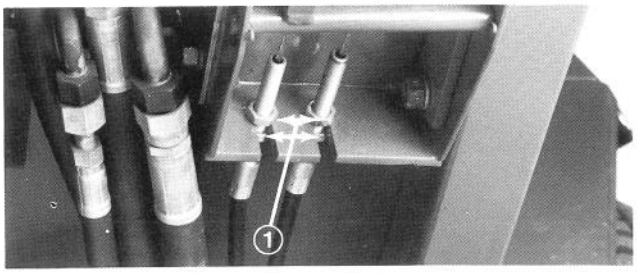

Figure 57
1. Jam nut

2. When adjustment of brake cables cannot get free travel within 1/2 to 1 inch (13 to 25 mm), the star-nut inside the brake drum must be adjusted. However, before adjusting the star nut, loosen brake cable nuts to prevent unnecessary strain on the cables.

3. Loosen five wheel nuts holding wheel and tire assembly on wheel studs.

4. Jack up machine until front wheel is off the shop floor. Use jack stands or block the machine to prevent it from falling accidentally.

5. Remove wheel nuts and slide wheel and tire assembly off studs. Rotate brake drum until adjusting slot is at bottom and centered over star nut that adjusts brake shoes (Fig. 58).

6. Using a brake adjusting tool or screwdriver, rotate star nut (Fig. 58) down until brake drum (Fig. 59) locks because of outward pressure of brake shoes (Fig. 59).



Figure 58
1. Slot

7. Loosen star nut about 12 to 15 notches or until brake drum rotates freely.

8. Install wheel and tire assembly on studs with five wheel nuts. Tighten nuts to 45-55 ft-lb (61-75 N·m).

9. Remove jack stands or blocking and lower machine to the shop floor.

10. Adjust the brake cables using step 1.

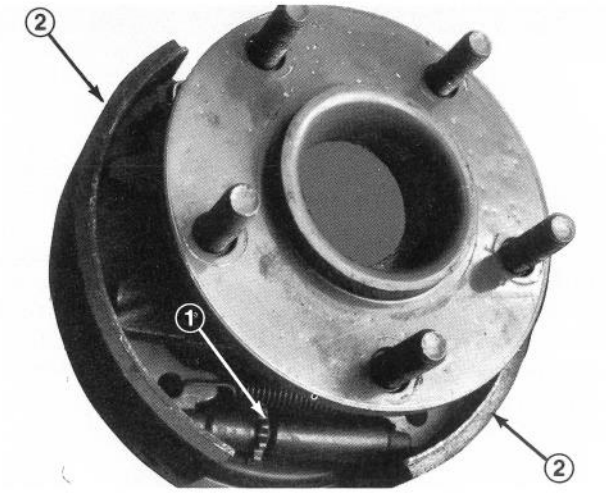

Figure 59
1. Star nut 2. Brake shoes

HYDRAULIC SYSTEM MAINTENANCE

ADJUSTING LIFT LEVER LATCH

A lift lever latch that is positioned incorrectly can cause the lift lever to hold the spool in an actuated position when the implement is in the FLOAT position. This will cause oil in the hydraulic system to overheat. When lift lever latch is adjusted correctly, the lift lever should just clear the rounded part of the latch as lever is moved into FLOAT position.

1. Unscrew ball from lift lever.

2. Remove self-tapping screws and lift cover off lift lever to expose the latch.

3. Loosen two capscrews on top of the lift lever latch (Fig. 60). Place lever on rounded tip of latch (Fig. 60), and slide latch w/lever forward until stopping resistance is felt. Then tighten capscrews to lock the latch in place. Check for free operation of the lift lever by moving lever from RAISE or TRANSPORT to FLOAT position. Lift lever should just clear rounded position of latch as lever is moved into FLOAT position.

4. Slide cover into place and install it with self-tapping screws. Screw ball onto lift lever.

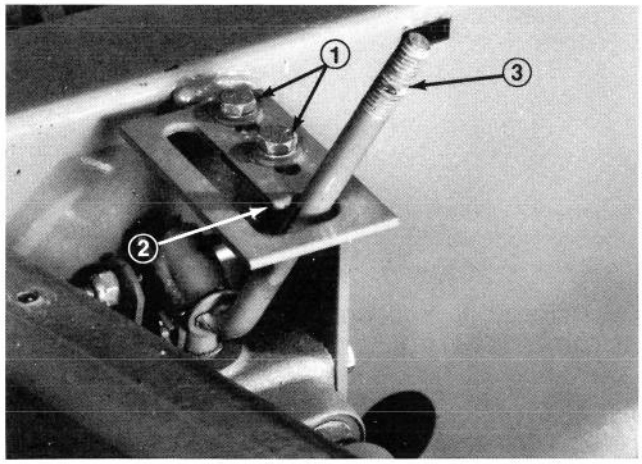

Figure 60

1. Capscrews
2. Rounded tab
3. Lift lever

REPLACING HYDRAULIC OIL FILTER

The hydraulic oil filter keeps the hydraulic system relatively free of contaminants and must be serviced at regular intervals. **Initially, change filter after first ten hours of engine operation, and thereafter, after every 250 hours of operation or yearly, whichever comes first.** Use TORO oil filter, Part No. 67-8110 as a replacement.

1. Clean area where hydraulic oil filter mounts. Remove filter from base (Fig. 61) and clean filter mounting surface.

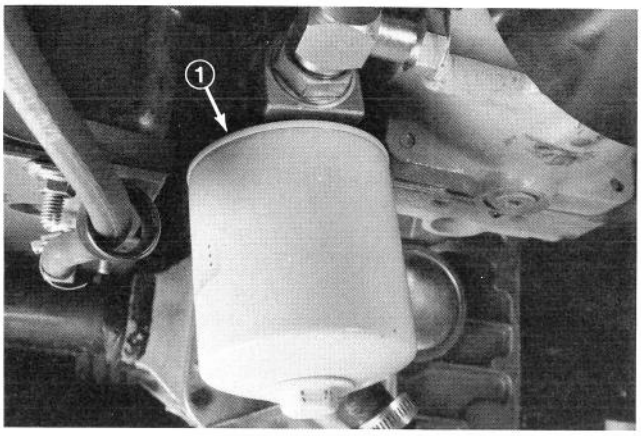

Figure 61

1. Hydraulic oil filter

2. Lubricate filter gasket with proper viscosity and type oil. Then fill filter using the same oil.

3. Install filter by hand until gasket contacts mounting head; then rotate an additional 1/2 turn.

4. Start engine and check for hydraulic oil leaks. Allow engine to run for about two minutes so any air in the system is purged — removed.

5. Shut engine off and check level of hydraulic system; refer to Check Hydraulic System Oil, page 16.

CHANGING HYDRAULIC SYSTEM OIL

The hydraulic system oil must be changed after every 250 hours of operation or seasonally, whichever comes first. The hydraulic system is designed to operate on any high quality detergent oil having the American Petroleum Institute — API — "service classification" SF/CC or CD. Oil viscosity — weight — must be selected according to anticipated ambient temperature for the season in which product will be used.

Temperature/viscosity recommendations are:

Expected Ambient Temperature	Recommended Viscosity and Type
(Extreme) over 90 F	SAE 30, Type SF/CC or CD engine oil.
(Normal) 40-100 F	SAE 10W-30 or 10W-40, Type SF/CC or CD engine oil.
(Cool — Spring/Fall) 30-50 F	SAE 5W-30, Type SF/CC or CD engine oil.
(Winter) Below 30 F	Type "F" or "FA" ATF Automatic Transmission Fluid.

HYDRAULIC SYSTEM MAINTENANCE

Note: Do not mix engine oil and automatic transmission fluid or hydraulic system component damage may result. When changing fluids, also change transmission filter. **DO NOT USE DEXRON II ATF.**

Note: Fluid to operate the power steering is supplied by the hydraulic system transmission charge pump. Cold weather start-up may result in "stiff" operation of the steering until the hydraulic system has warmed up. Using proper weight hydraulic oil in system will minimize this condition.

The axle housing acts as the reservoir for the system. The transmission and axle housing are shipped from the factory with approximately 5 quarts (4.7 L) of SAE 10W-30 engine oil. However, check level of transmission oil before engine is first started and daily thereafter.

1. Start engine, park machine on a level surface, lower implement to the shop floor, set the parking brake and shut engine off. Block the two rear wheels.

2. Jack up both sides of front axle and support it with jack stands.

3. Clean area around hydraulic oil filter and remove filter.

4. Remove drain plug from fitting between axle housing and oil filter and allow oil to flow into drain pan (Fig. 62).

5. Install new filter; refer to steps 1-3 in Replacing Hydraulic Oil Filter, page 34, for proper procedures.

6. Install drain plug in fitting between axle housing and oil filter (Fig. 62).

7. Remove dipstick from axle filler tube (Fig. 63) and fill axle to proper level with correct type and viscosity oil recommended for expected ambient temperature conditions; refer to table above.

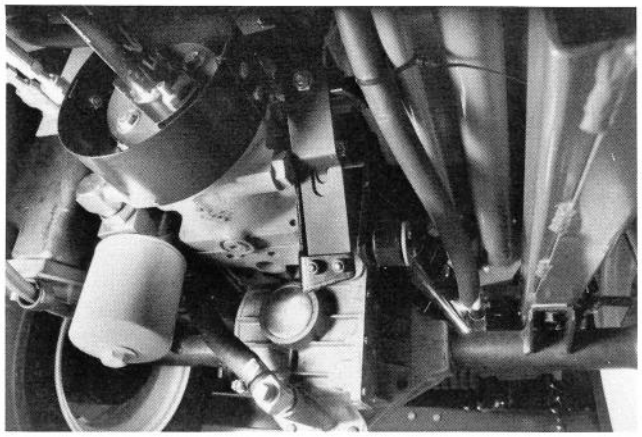

Figure 62
1. Drain plug

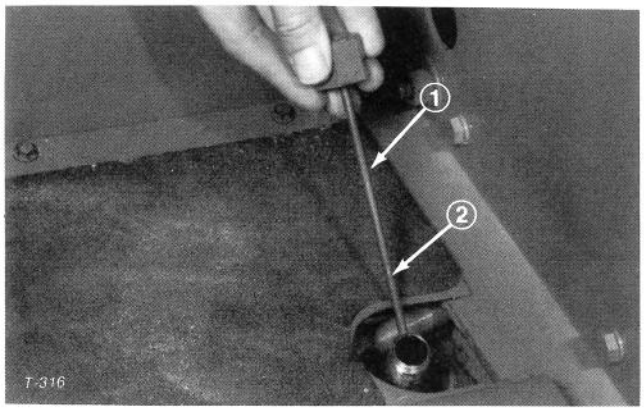

Figure 63
1. Dipstick 2. Groove

8. Start and run the engine at idle speed for about two minutes and turn the steering wheel lock to lock to purge air trapped in the system. Shut the engine off.

9. Leave machine set for two additional minutes, then remove dipstick and check oil level in axle (Fig. 63). If level is low, add oil until level matches groove in dipstick (Fig. 63). If level is too high, remove drain plug (Fig. 62) and drain oil until oil level matches groove in dipstick.

IDENTIFICATION AND ORDERING

MODEL AND SERIAL NUMBERS

The Groundsmaster 322-D has two identification numbers: a model number and a serial number. These numbers are stamped into a plate located on front bulkhead left of seat (Fig. 64). In any correspondence concerning the unit, supply the model and serial numbers to ensure correct information and replacement parts are obtained.

To order replacement parts from an authorized TORO Distributor, supply the following information:

1. Model and serial numbers.

2. Part number, description and quantity of parts desired.

Note: Do not order by reference number if a parts catalog is being used; use the part number.

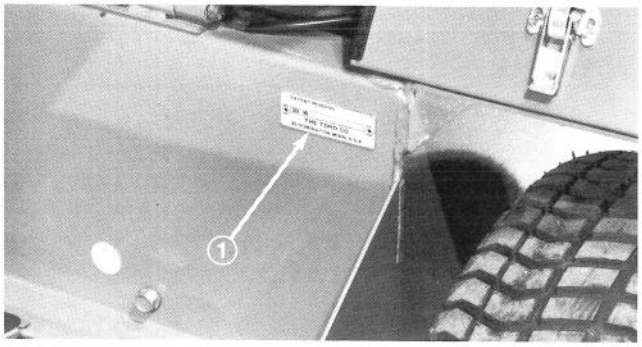

Figure 64

1. Traction unit model and serial number

PREPARATION FOR SEASONAL STORAGE

Traction Unit

1. Thoroughly clean the traction unit, cutting unit and the engine, paying special attention to these areas:
   - radiator screen
   - underneath the cutting unit
   - under the cutting unit belt covers
   - counterbalance springs
   - P.T.O. Shaft Assembly
   - all grease fittings and pivot points
2. Check the tire pressure. Inflate all traction unit tires to 12 psi (83 kPa).
3. Remove, sharpen and balance the cutting unit's blades. Reinstall the blades and torque the blade fasteners to 75-100 ft-lb (102-136 N·m).
4. Check all fasteners for looseness; tighten as necessary.
5. Grease or oil all grease fittings and pivot points. Wipe off any excess lubricant.
6. Ensure that the P.T.O. lever remains in the disengaged position so that the P.T.O. belt does not take a "set."
7. Lightly sand and use touch up paint on painted areas that are scratched, chipped or rusted. Repair any dents in the metal body.
8. Service the battery and cables as follows:
   a. Remove the battery terminals from the battery posts.
   b. Clean the battery, terminals and posts with a wire brush and baking soda solution.
   c. Coat the cable terminals and battery posts with Grafo 112X skin-over grease (Toro Part Number 505-47), or petroleum jelly to prevent corrosion.
   d. Slowly recharge the battery every 60 days for 24 hours to prevent lead sulfation of the battery.

Engine

1. Drain the engine oil from the oil pan and replace the drain plug.
2. Remove and discard the oil filter. Install a new oil filter.
3. Refill oil pan with 3.7 quarts (3.5 L) of SAE 10W-30 motor oil. Use API classification SF/CC or CD oil.
4. Start the engine and run at idle speed for approximately two minutes.
5. Stop the engine.
6. Thoroughly drain all fuel from the fuel tank, lines, fuel pump filter, and the fuel filter/water separator assembly.
7. Flush the fuel tank with fresh, clean diesel fuel.
8. Resecure all fuel system fittings.
9. Thoroughly clean and service the air cleaner assembly.
10. Seal the air cleaner inlet and the exhaust outlet with weatherproof tape.
11. Check anti-freeze protection and add as needed for expected minimum temperature in your area.

SERVICE INTERVAL CHART

Date								
Hour Meter Reading								
Service Interval	↓	Daily	10	50	100	150	200	250
Check Interlock System	Daily							
Check Engine Oil Level	Daily							
Check Transmission Oil Level	Daily							
Check Radiator and Coolant (more often when conditions are dirty)	Daily							
Drain Fuel Filter/Water Separator	Daily							
Replace Hydraulic Oil Filter (Initial)	10							
Tighten Front Wheel Nuts (Initial)	2 & 10							
Change Engine Oil Filter (Initial)	50							
Change Engine Oil (more often when conditions are dirty)	50							
Check Traction Linkage Adj.	50							
Check Brakes and Lubricate Cables	50							
Check Tire Pressure (12 psi - 83 kPa)	50							
Lubricate Grease Fittings	50							
Service Air Cleaner (Dust Cup & Baffle) (more often when conditions are dirty)	50							
Check Battery	50							
Check PTO Drive Belt	50							
Change Engine Oil Filter (more often when conditions are dirty)	100							
Check Engine Fan Belt and Alternator	100							
Clean Muffler of Carbon	250							
Tighten Front Wheel Nuts	250							
Service Air Cleaner (Filter)	250							
Change Transmission Oil and Filter	250							
Check Rear Wheel Toe-In	250							
Replace Fuel Filter	400							
Replace Fuel Pump Filter	400							
Check Fuel Lines and Connections	400							
Drain and Clean Fuel Tank	400							
Pack Rear Wheel Bearings	500							
Replace all Interlock Switches (2 years)	1000							
Drain and Flush Cooling System (2 years)	1000							

SERVICE INTERVAL CHART

Date								
Hour Meter Reading								
Service Interval	↓	300	350	400	450	500	550	600
Check Interlock System	Daily							
Check Engine Oil Level	Daily							
Check Transmission Oil Level	Daily							
Check Radiator and Coolant (more often when conditions are dirty)	Daily							
Drain Fuel Filter/Water Separator	Daily							
Replace Hydraulic Oil Filter (Initial)	10							
Tighten Front Wheel Nuts (Initial)	2 & 10							
Change Engine Oil Filter (Initial)	50							
Change Engine Oil (more often when conditions are dirty)	50							
Check Traction Linkage Adj.	50							
Check Brakes and Lubricate Cables	50							
Check Tire Pressure (12 psi - 83 kPa)	50							
Lubricate Grease Fittings	50							
Service Air Cleaner (Dust Cup & Baffle) (more often when conditions are dirty)	50							
Check Battery	50							
Check PTO Drive Belt	50							
Change Engine Oil Filter (more often when conditions are dirty)	100							
Check Engine Fan Belt and Alternator	100							
Clean Muffler of Carbon	250							
Tighten Front Wheel Nuts	250							
Service Air Cleaner (Filter)	250							
Change Transmission Oil and Filter	250							
Check Rear Wheel Toe-In	250							
Replace Fuel Filter	400							
Replace Fuel Pump Filter	400							
Check Fuel Lines and Connections	400							
Drain and Clean Fuel Tank	400							
Pack Rear Wheel Bearings	500							
Replace all Interlock Switches (2 years)	1000							
Drain and Flush Cooling System (2 years)	1000							

SERVICE INTERVAL CHART

Date								
Hour Meter Reading								
Service Interval	↓	650	700	750	800	850	900	950
Check Interlock System	Daily							
Check Engine Oil Level	Daily							
Check Transmission Oil Level	Daily							
Check Radiator and Coolant (more often when conditions are dirty)	Daily							
Drain Fuel Filter/Water Separator	Daily							
Replace Hydraulic Oil Filter (Initial)	10							
Tighten Front Wheel Nuts (Initial)	2 & 10							
Change Engine Oil Filter (Initial)	50							
Change Engine Oil (more often when conditions are dirty)	50							
Check Traction Linkage Adj.	50							
Check Brakes and Lubricate Cables	50							
Check Tire Pressure (12 psi - 83 kPa)	50							
Lubricate Grease Fittings	50							
Service Air Cleaner (Dust Cup & Baffle) (more often when conditions are dirty)	50							
Check Battery	50							
Check PTO Drive Belt	50							
Change Engine Oil Filter (more often when conditions are dirty)	100							
Check Engine Fan Belt and Alternator	100							
Clean Muffler of Carbon	250							
Tighten Front Wheel Nuts	250							
Service Air Cleaner (Filter)	250							
Change Transmission Oil and Filter	250							
Check Rear Wheel Toe-In	250							
Replace Fuel Filter	400							
Replace Fuel Pump Filter	400							
Check Fuel Lines and Connections	400							
Drain and Clean Fuel Tank	400							
Pack Rear Wheel Bearings	500							
Replace all Interlock Switches (2 years)	1000							
Drain and Flush Cooling System (2 years)	1000							

The Toro Promise

A LIMITED WARRANTY

The Toro Company promises to repair your Model 30788 TORO GROUNDSMASTER® MOWER, and its originally purchased cutting unit, if defective in materials or workmanship. The following time periods from the date of purchase apply:

Model 30788 or 30739 ..... Two Years or 1500 operational hours, whichever comes first.

The costs of parts, labor and transportation are included.

If you feel your TORO product is defective and wish to rely on The Toro Promise, the following procedure is recommended:

1. Contact your Authorized TORO Distributor or Commercial Dealer (the Yellow Pages of your telephone directory is a good reference source).
2. The TORO Distributor or Commercial Dealer will advise you on the arrangements that can be made to inspect and repair your product.
3. The TORO Distributor or Commercial Dealer will inspect the product and advise you whether the product is defective and, if so, make all repairs necessary to correct the defect without an extra charge to you.

If for any reason you are dissatisfied with the distributor's analysis of the defect or the service performed, you may contact us.

Write:
TORO Commercial Products Service Department
8111 Lyndale Avenue South
Minneapolis, Minnesota 55420

The above remedy of product defects through repair by an Authorized TORO Distributor or Commercial Dealer is the purchaser's sole remedy for any defect.

THERE IS NO OTHER EXPRESS WARRANTY. ALL IMPLIED WARRANTIES OF MERCHANTABILITY AND FITNESS FOR USE ARE LIMITED TO THE DURATION OF THE EXPRESS WARRANTY.

Some states do not allow limitations on how long an implied warranty lasts, so the above limitation may not apply to you.

This Warranty applies only to parts or components which are defective and does not cover repairs necessary due to normal wear, misuse, accidents, or lack of proper maintenance. Regular, routine maintenance of the unit to keep it in proper condition is the responsibility of the owner.

All warranty repairs reimbursable under the Toro Promise must be performed by an Authorized TORO Commercial Dealer or Distributor using Toro approved replacement parts.

Repairs or attempted repairs by anyone other than an Authorized TORO Distributor or Commercial Dealer are not reimbursable under the Toro Promise. In addition, these unauthorized repair attempts may result in additional malfunctions, the correction of which is not covered by warranty. This warranty shall be declared void if the owner removes, disconnects, or in any way alters the operation of the products hour meter.

THE TORO COMPANY IS NOT LIABLE FOR INDIRECT, INCIDENTAL OR CONSEQUENTIAL DAMAGES IN CONNECTION WITH THE USE OF THE PRODUCT INCLUDING ANY COST OR EXPENSE OF PROVIDING SUBSTITUTE EQUIPMENT OR SERVICE DURING PERIODS OF MALFUNCTION OR NON-USE.

Some states do not allow the exclusion or limitation of incidental or consequential damages, so the above limitation or exclusion may not apply to you.

This warranty gives you specific legal rights, and you may also have other rights which vary from state to state.

COUNTRIES OTHER THAN THE UNITED STATES OR CANADA

Customers who have purchased TORO products exported from the United States or Canada should contact their TORO Distributor (Dealer) to obtain guarantee policies for your country, province or state. If for any reason you are dissatisfied with your Distributor's service or have difficulty obtaining guarantee information, contact the TORO importer. If all other remedies fail, you may contact us at The Toro Company.

Litho in U.S.A.