FORM NO. 3314-416 Rev. A

TORO

MODEL NO. 20217 - 1000001 & UP
MODEL NO. 20218 - 1000001 & UP

OPERATOR'S MANUAL

21" HP & SP RECYCLER

FINGERTIP START

⚠ SAFETY INSTRUCTIONS

This mower "meets or exceeds CPSC blade safety requirements for walk behind rotary mowers" and the B71.1-1986 specifications of the American National Standards Institute. However, improper use or maintenance by the operator or owner can result in injury. To reduce the potential for injury, comply with these safety instructions and always pay attention to the safety alert symbol ⚠ which means CAUTION, WARNING or DANGER. Failure to comply with these instructions may result in personal injury.

BEFORE OPERATING

1. Read this manual carefully before operating the mower. Become familiar with the controls and proper use of the mower. Never allow children to operate the mower or adults to operate it without proper instructions.

2. Keep everyone, especially children and pets, away from area of operation. Thoroughly inspect area where mower will be used and remove sticks, stones, wire, and debris.

3. Wear long pants and substantial shoes. Do not operate mower while wearing open sandals or when barefoot.

4. Always wear safety glasses or eye shields during operation to protect eyes from foreign objects that may be thrown from the machine.

5. Check fuel level before starting engine. Do not fill fuel tank indoors or when the engine is running. Wait until engine cools for several minutes after running. Wipe up spilled gasoline before starting engine.

6. Keep all guards, shields, and safety devices in place. Repair or replace defective or damaged parts, including decals. Check all safety devices before each use.

7. Traction drive (self-propelled model), blade, and engine are designed to stop when control bar is released. Ensure engine kill control bar and brake function properly before each use of mower.

8. Disengage the self-propelled mechanism or drive clutch (self-propelled model) before starting the engine.

WHILE OPERATING

9. Do not run engine indoors.

10. Always maintain secure footing. Keep a firm grip on the handle and walk; never run. Never operate mower in wet grass. Mow only in daylight or in good artificial light.

11. Mow across the face of slopes; never up and down. Use extreme caution when changing direction on slopes. Do not mow excessively steep slopes.

12. Keep face, hands, and feet away from the mower housing and cutter blade when the engine is running. Stay behind the handle until the engine stops.

13. Since the blade rotates for a few seconds after the control bar is released, stay behind the handle until all moving parts stop.

14. After striking a foreign object or if mower vibrates abnormally, stop engine and remove wire from spark plug. Check mower for damage and make all repairs before using mower again.

15. Stop engine before adjusting the height-of-cut.

16. Stop engine when crossing a gravel driveway, road, or sidewalk.

17. Stop engine before leaving the operator's position—behind the handle. Disconnect wire from spark plug if mower will be unattended.

18. Do not touch engine while it is running or shortly after it is stopped because engine will be hot enough to cause a burn.

MAINTENANCE AND STORAGE

19. Perform only those maintenance instructions described in this manual. If major repairs are ever needed or if assistance is desired, contact your local Authorized TORO Service Dealer.

20. Before mower is cleaned, inspected, serviced, or adjusted, stop engine and disconnect wire from spark plug. Keep wire away from plug to prevent accidental starting.

21. To ensure the mower is in safe operating condition, frequently check and keep all nuts, bolts, and screws tight. Ensure blade bolt is tightened to 50 ft-lb (68 N·m).

©The Toro Company-1990, Rev. 1991

⚠ SAFETY INSTRUCTIONS

22. To reduce fire hazard, keep engine free of excessive grease, grass, leaves, and accumulations of dirt.

23. Allow engine to cool before storing mower in any enclosure. Do not store mower with gasoline in fuel tank near any open flame or where gasoline fumes may be ignited by a spark.

24. Do not overspeed the engine by changing governor settings.

25. At the time of manufacture, the mower conformed to the safety standards in effect for rotary mowers. To assure best performance and continued safety certification of the mower, use genuine TORO replacement parts and accessories. Replacement parts and accessories made by other manufacturers may result in non-conformance with the safety standards, and that could be dangerous.

⚠ SAFETY DECALS AND INSTRUCTIONS

Safety decals and instructional decals are easily visible to the operator and are located near any area of potential danger. Replace any decal that is damaged or lost.



Self-propelled models only

ON REAR OF CONTROL PANEL
(Part No. 63-9060)



Hand push models only

ON HANDLE
(Part No. 56-6280)



ON MOWER HOUSING
(Part No. 39-5770)

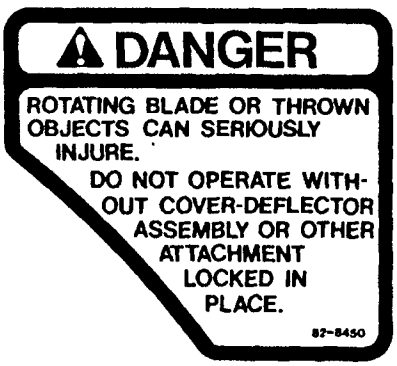

UNDER COVER-DEFLECTOR ASSEMBLY ON MOWER DECK
(Part No. 82-8450)

TABLE OF CONTENTS

	Page
Set-Up Instructions	3
Before Operating	3
Recycler® Mower Tips	4
Operating Instructions	5
Maintenance	6
Servicing Air Cleaner	6
Replacing Spark Plug	7
Draining Gasoline	7
Changing Crankcase Oil	7
Adjusting Throttle	8
Adjusting Wheel Drive	8
Inspecting/Removing/Sharpening Blade	9
Lubrication	9
Adjusting Blade Brake	10
Cleaning Mower Housing	10
Preparing Mower For Storage	10
Optional Equipment	11
Toro Service Support	11
Product Identification	11
The Toro Promise	

SET-UP INSTRUCTIONS

Note: Determine left and right hand sides of the unit by standing in the operator's position.

INSTALL HANDLE (Fig. 1)

1. The knob on the left handle is shipped on the outside of the handle. Remove the handle knob and bolt and reassemble the knob on the inside of the handle. Both handle knobs should be positioned on the inside of the handles.

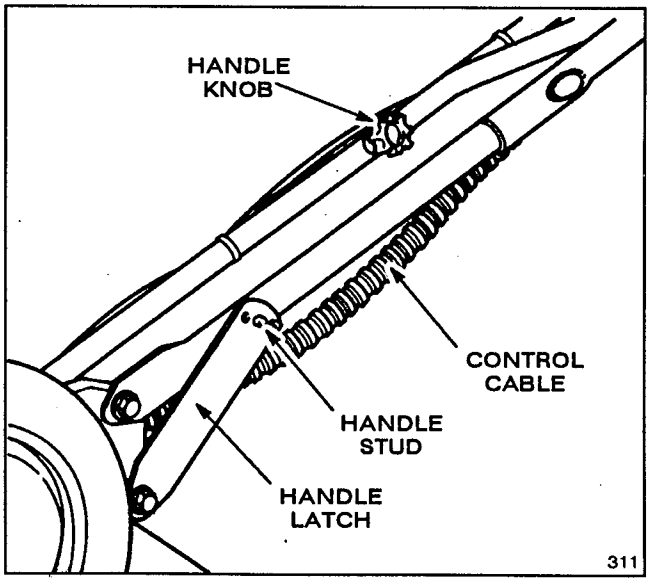

Self-propelled model

Figure 1

2. Align handles and tighten handle knobs. Bend handle latches slightly inward

3. Pivot handle backward until handle studs can be snapped into center holes of handle latches. If handle height is not satisfactory, adjust by placing handle stud into a different hole. Tighten handle knobs.

INSTALL STARTER ROPE (Fig. 2)

1. Pull starter rope through rope guide on handle. To make rope easier to loop, squeeze control bar on handle to release blade brake.

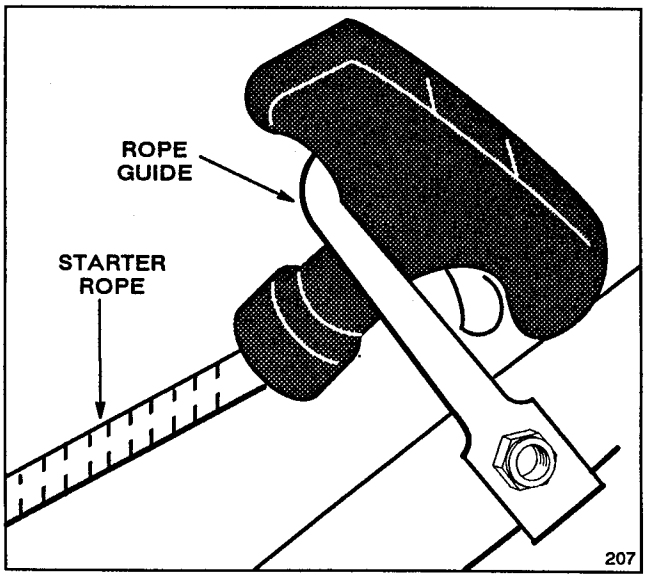

Figure 2

BEFORE OPERATING

FILL CRANKCASE WITH OIL

Initially, crankcase must be filled with 20 ounces (0.6 liters) of SAE 30 oil. 10W-30 oil may be substituted if SAE 30 is not available. Use any high quality detergent oil having the American Petroleum Institute (API) "service classification"—SC, SD, SE, SF or SG.

Before each use, ensure oil level is between FULL and ADD marks on dipstick (Fig. 3). Add oil if level is low.

1. Position mower on level surface and clean around oil dipstick (Fig. 3).

2. Remove dipstick by rotating cap counterclockwise 1/4 turn.

3. Wipe dipstick and insert it into filler neck. Rotate cap clockwise 1/4 turn. Then remove dipstick and check level of oil on side of dipstick with FULL and ADD marks (Fig. 3). If level is low, add only enough oil to raise level to FULL mark on dipstick. **DO NOT FILL ABOVE FULL MARK BECAUSE ENGINE COULD BE DAMAGED WHEN STARTED. POUR OIL SLOWLY.**

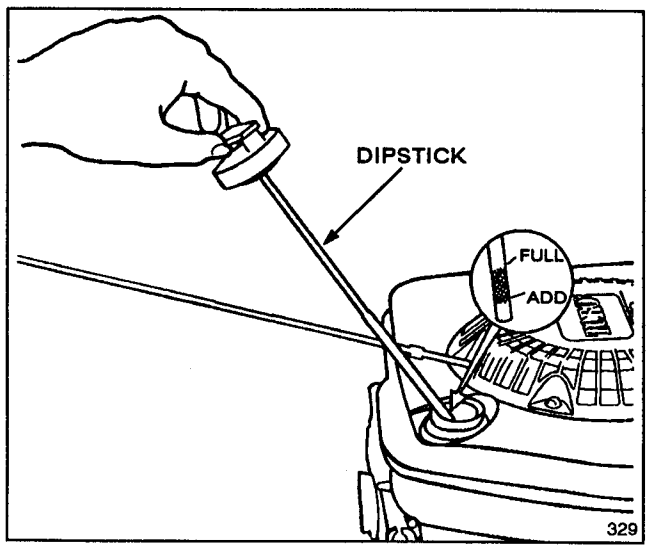

Figure 3

4. Insert dipstick into filler neck and rotate cap clockwise 1/4 turn to lock.

Note: Check oil level each time mower is used or after every 5 operating hours. Initially, change oil after the first 2 hours of operation; thereafter, change oil after every 25 hours of operation. More frequent oil changes are required in dusty or dirty conditions.

BEFORE OPERATING

WARNING

DANGER: Gasoline is extremely flammable and explosive under certain conditions. Do not smoke when handling fuel and keep fuel far away from open flames and sparks. Never buy more than a 30 day supply of gasoline. Store it in an approved container. Keep gasoline out of reach of children.

Refuel outdoors and only when engine is cold. Do not fill tank full. Fill tank to within 1/4" to 1/2" (6 to 13 mm) from top of tank, not into filler neck. This space is for expansion of fuel. Use funnel or spout to prevent spilling. Wipe up any spilled gas.

FILL FUEL TANK WITH GASOLINE

Note: The Toro Company strongly recommends the use of fresh, clean, UNLEADED regular grade gasoline in Toro gasoline powered products. Unleaded gasoline burns cleaner, extends engine life, and promotes good starting by reducing the build-up of combustion chamber deposits. Leaded gasoline can be used if unleaded is not available.

Toro also recommends that Toro Stabilizer/Conditioner be used regularly in all Toro gasoline powered products during operation and storage seasons. Toro Stabilizer/Conditioner cleans the engine during operation and prevents gum-like varnish deposits from forming in the engine during periods of storage.

1. Clean around fuel tank cap and remove cap from tank (Fig. 3). Using unleaded gasoline, fill fuel tank to within 1/4" to 1/2" (6 to 13 mm) from top of tank, not into filler neck. Do not fill tank full.

2. Install fuel tank cap and wipe up any spilled gasoline.

IMPORTANT: DO NOT MIX OIL WITH THE GASOLINE. NEVER USE METHANOL, GASOLINE CONTAINING METHANOL, GASOHOL CONTAINING MORE THAN 10% ETHANOL OR WHITE GAS BECAUSE ENGINE FUEL SYSTEM DAMAGE COULD RESULT.

DO NOT USE FUEL ADDITIVES OTHER THAN THOSE MANUFACTURED FOR FUEL STABILIZATION DURING STORAGE SUCH AS TORO'S STABILIZER/CONDITIONER OR A SIMILAR PRODUCT. TORO'S STABILIZER/CONDITIONER IS A PETROLEUM DISTILLATE BASED CONDITIONER/STABILIZER. TORO DOES NOT RECOMMEND STABILIZERS WITH AN ALCOHOL BASE SUCH AS ETHANOL, METHANOL OR ISOPROPYL. ADDITIVES SHOULD NOT BE USED TO TRY TO ENHANCE THE POWER OR PERFORMANCE OF MACHINE.

RECYCLING

SPECIAL RECYCLER FEATURES

Your Toro Recycler is a mower with a new and completely different cutting concept. It leaves your lawn with a bagged look without bagging clippings.

The mower is equipped with special parts which increase your mower's ability to recycle grass clippings, leaves, and other yard debris down into the grass. These parts are:

- A special blade and blade stiffener
- Four special "kicker plates" positioned on the underside of the mower deck in strategic positions (Fig. 4)

The blade and four kicker plates are permanent parts of your mower. Remove the blade only for sharpening or replacement. Never remove the kickers, unless they need to be replaced.

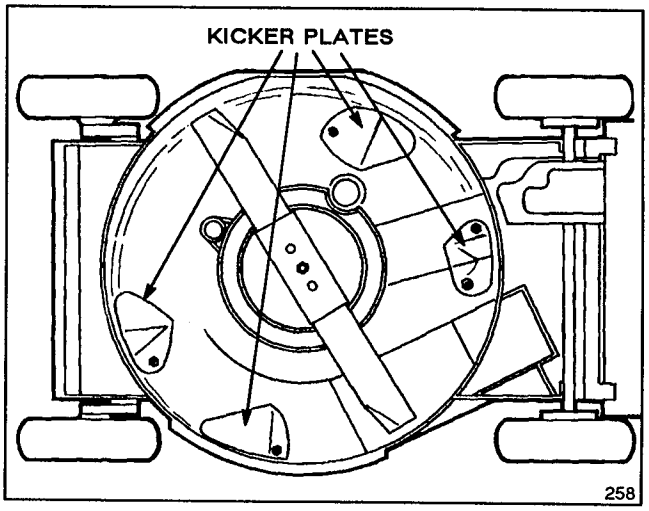

Figure 4

RECYCLING

WARNING

Mow grass in dry conditions only. For safety reasons, never operate mower in wet grass. There is the possibility that you may slip on wet grass and that your foot might slide into the blade path.

TIPS FOR RECYCLING GRASS CLIPPINGS

Even with the Recycler, you may encounter conditions where it is not possible to hide all of the recycled clippings or leaves all of the time down in the grass. Follow these instructions for the best recycling results and lawn appearance:

- Maintain a **sharp blade** throughout the cutting season. Periodically file down nicks on blade.
- Clean any residue from the underside of mower housing and kickers after each use. See Cleaning Mower Housing, page 10.
- When cutting grass over 6" tall, you may want to cut the lawn twice to hide clippings down in the grass.
- In the heat of the summer, it is best to cut grass at the C, D or E height-of-cut settings. Cut only about 1/3 of the grass blade. Cutting below the C setting is not recommended unless grass is sparse or it is late fall when grass growth begins to slow down. When cutting long grass, you may need to use a higher height-of-cut setting and a slower walking speed; then recut the grass at a more normal setting. If grass is too long and leaves clumps on top of lawn, mower may plug and cause engine to stall.
- Alternate mowing direction. This helps disperse clippings over lawn for even fertilization.

If the recycled lawn appearance appears marginal, try one or more of the following:

- Sharpen the blade.
- Walk at a slower pace while mowing.
- Raise the height-of-cut setting on your mower.
- Cut your grass more frequently.
- Overlap cutting swaths instead of cutting a full swath with each pass.
- Mow across the marginal areas a second time.

TIPS FOR RECYCLING LEAVES

You can recycle your leaves in the fall. When spring arrives, the leaf particles will have decomposed and returned valuable nutrients to the soil.

- Ensure leaves are dry.
- When recycling is complete, always be sure that 50% of the lawn shows through recycled leaf cover. This may require one or more passes over the leaves.
- For light leaf coverage, recycle with all wheels at the same height-of-cut setting.
- If there are more than 5" of leaves on lawn, set the front wheels one or two notches higher than the rear wheels. This makes it easier to feed leaves under mower deck.
- Walk at a slower mowing speed if recycled leaves are not cut up finely enough to be hidden down in the grass.
- If you recycle a lot of oak leaves, you might want to add lime to your grass in the spring. Lime reduces the acidity of oak leaves.

OPERATING INSTRUCTIONS

STARTING, STOPPING, AND SELF-PROPELLING (self-propelled model only)

1. CONTROLS—Throttle, ground speed control (self-propelled model), control bar, and fingertip starter are on upper handle (Figs. 5 & 6).

2. Push spark plug wire onto spark plug (Fig. 14).

3. STARTING—Move ground speed control to "N" (self-propelled model only) and throttle to CHOKE (the symbol for CHOKE is Z). Lift control bar to handle (Figs. 5 & 6) and hold. Pull fingertip starter out until positive engagement results; then pull vigorously to start the engine. When engine starts, remove throttle from CHOKE and regulate as desired.

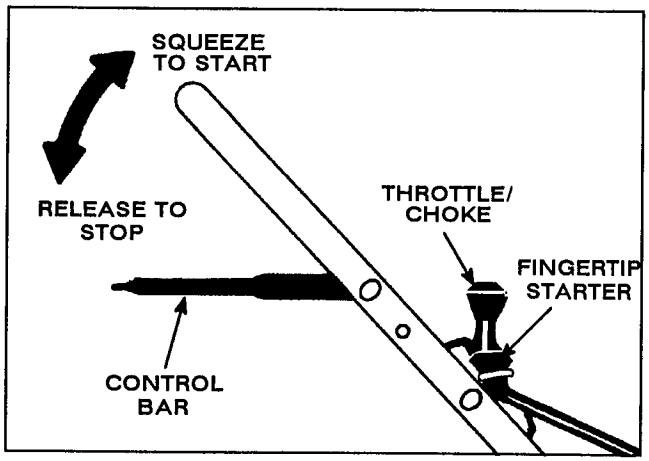

Hand push model

Figure 5

OPERATING INSTRUCTIONS

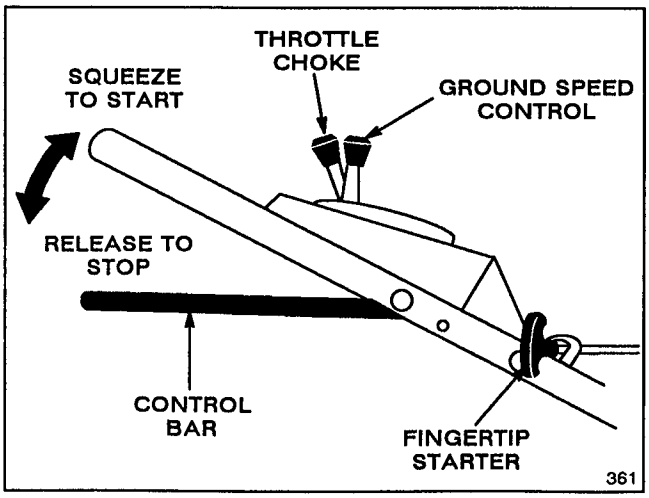

Self-propelled model

Figure 6

4. GROUND SPEED (self-propelled model only) (Fig. 6)—Move ground speed control to desired setting. Number "1" is slow, "2" is medium, and "3" is a fast walking pace. Move ground speed control to "N" when using the mower for trimming and whenever leaving mower.

5. WHEEL TRACTION OPERATION (self-propelled model only) (Fig. 7)—Lift control bar to RUN/DRIVE position. Move ground speed control to desired setting and squeeze control bar against handle to drive. Ground speed varies depending on space between control bar and handle.

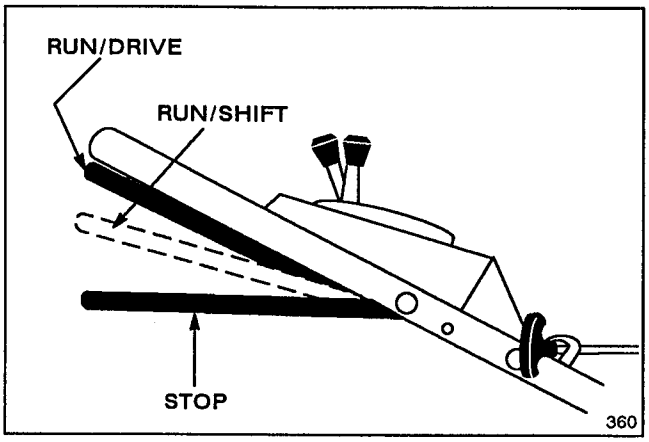

Self-propelled model

Figure 7

Note: The drive wheels are equipped with free-wheeling clutches which enable the mower to be pulled rearward easier when the wheel drive is disengaged. To disengage the clutches, mower must be pushed forward at least 1" after wheel drive operation has stopped.

6. STOPPING—To stop engine, release control bar. Pull wire off spark plug if mower will be unattended or not used.

ADJUSTING HEIGHT-OF-CUT (Fig. 8)

Five letters cast into the housing represent each graduated height-of-cut setting.

1. Stop the engine and wait for all moving parts to stop.

2. For easier adjustment, lift housing up so wheel is off ground. **Do not put fingers under housing when lifting.** Squeeze adjusting lever toward wheel and move to desired setting. Ensure pin on adjusting lever engages slot in housing. Adjust all wheels to the same setting.

Note: Front wheels can be adjusted to 1/2 inch. Move adjusting lever past "A" and release pin into slot in housing.

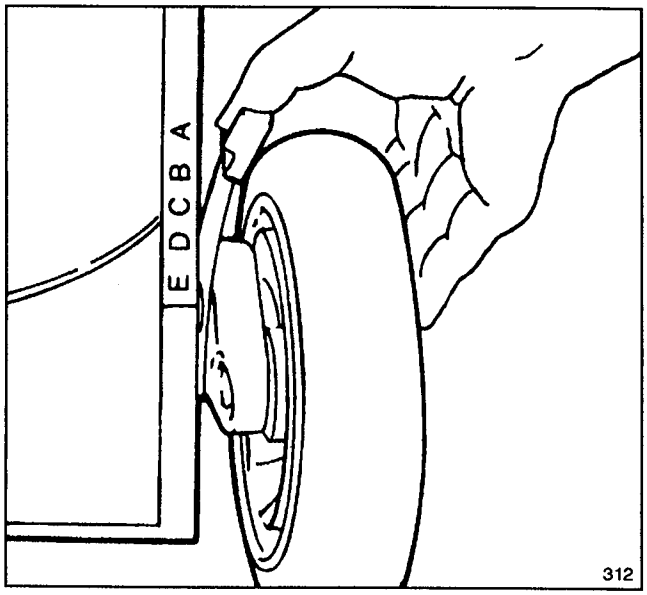

Figure 8

MAINTENANCE

⚠ CAUTION

Pull wire off spark plug before performing adjustments or maintenance.

SERVICING AIR CLEANER

Normally, replace air cleaner after every 25 operating hours. More frequent replacement is required when mower is operated in dusty or dirty conditions.

1. Stop engine and pull wire off spark plug (Fig. 11).

2. Remove screw securing air cleaner cover to engine (Fig. 9). Tilt cover down and clean thoroughly.

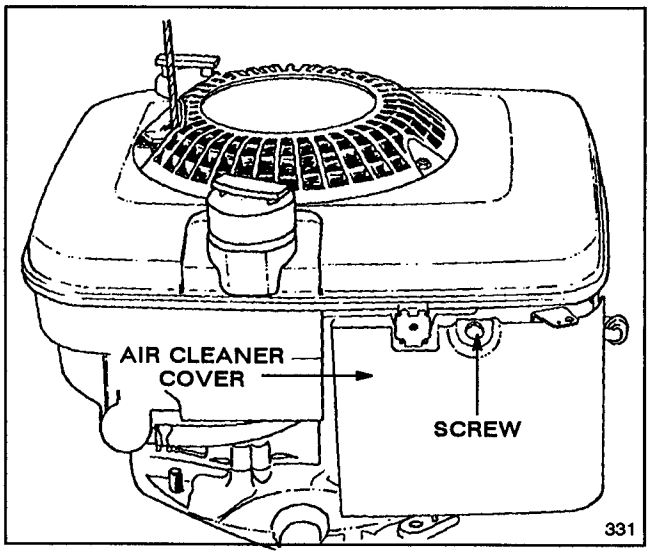

Figure 9

3. Remove paper air cleaner filter (Fig. 10) and discard.

4. Insert new paper air cleaner filter cartridge so lip touches back plate as shown in Figure 10.

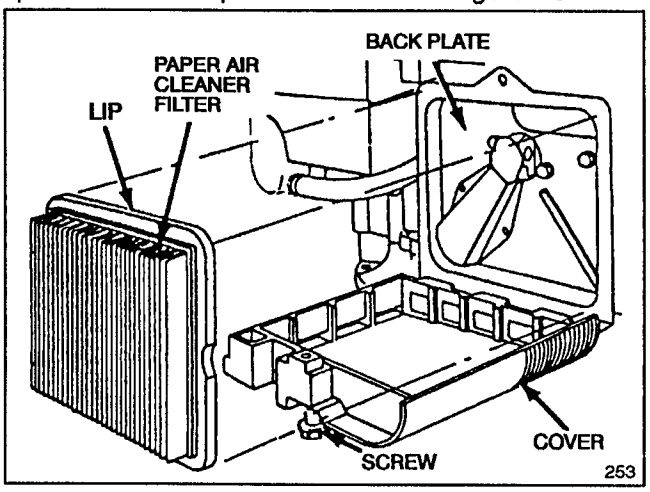

Figure 10

5. Close air cleaner cover and secure with screw.

IMPORTANT: Do not operate engine without air cleaner element because extreme engine wear and damage will likely result.

REPLACING SPARK PLUG

Use a Champion RJ19LM spark plug or equivalent. Correct air gap is 0.030" (0.76 mm). Remove plug after every 25 operating hours and check its condition.

1. Stop engine and pull wire off spark plug (Fig.11).

2. Clean around spark plug and remove plug from cylinder head.

IMPORTANT: Replace a cracked, fouled, or dirty spark plug. Do not sand blast, scrape, or clean electrodes because engine damage could result from grit entering cylinder.

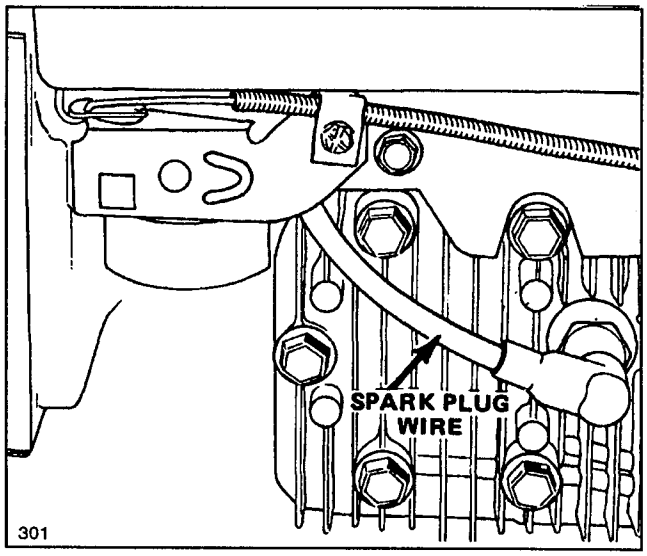

Figure 11

3. Set air gap at 0.030" (0.76 mm) (Fig. 12). Install correctly gapped spark plug and gasket seal. Tighten plug firmly to 15 ft-lb (20 N·m).

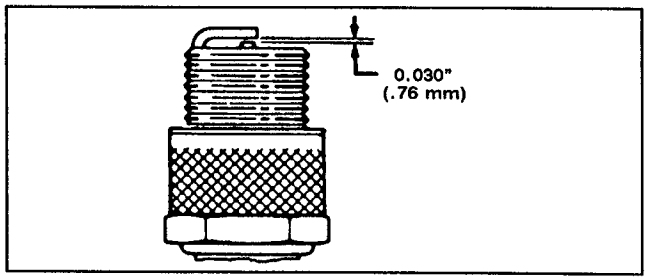

Figure 12

DRAINING GASOLINE

1. Stop engine and wait for engine to cool. Pull wire off spark plug (Fig. 11).

⚠ CAUTION

Drain gasoline from a cold engine only.

2. Remove cap from fuel tank and use pump-type syphon to drain fuel into clean gas can.

Note: This is the only procedure recommended for draining fuel.

CHANGING CRANKCASE OIL

Change oil after the first 2 operating hours and after every 25 hours thereafter. Since warm oil drains better and carries more contaminants than cold, run engine for a minute or so before draining oil.

MAINTENANCE

1. Stop engine and pull wire off spark plug (Fig. 11).

2. Drain gasoline from fuel tank: refer to Draining Gasoline, page 7.

3. Tip mower on its right side. Remove drain plug from underside of mower using an adjustable wrench (Fig. 13). Place a drain pan under mower.

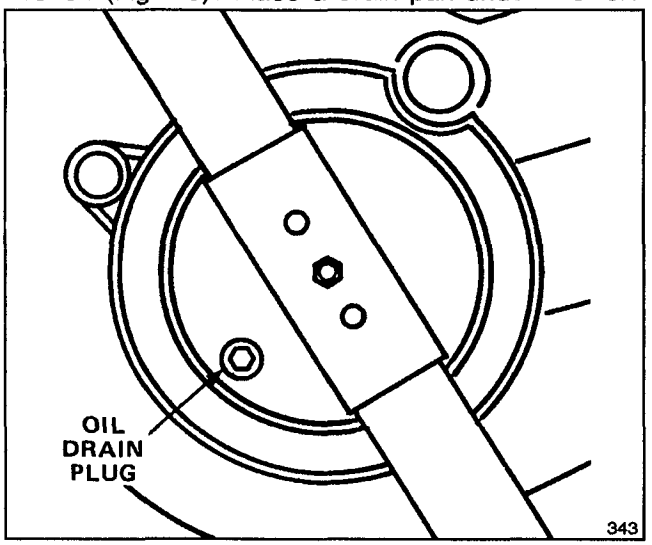

Figure 13

4. Lower mower to allow oil to drain into pan.

5. After draining, clean drain plug and reinstall it. Wipe up any spilled oil. Fill engine with fresh oil: refer to Fill Crankcase With Oil, page 3.

ADJUSTING THROTTLE

Throttle control adjustment may be required if engine does not start. Whenever a new throttle control cable is installed, throttle must be adjusted.

1. Stop engine and pull wire off spark plug (Fig.14).

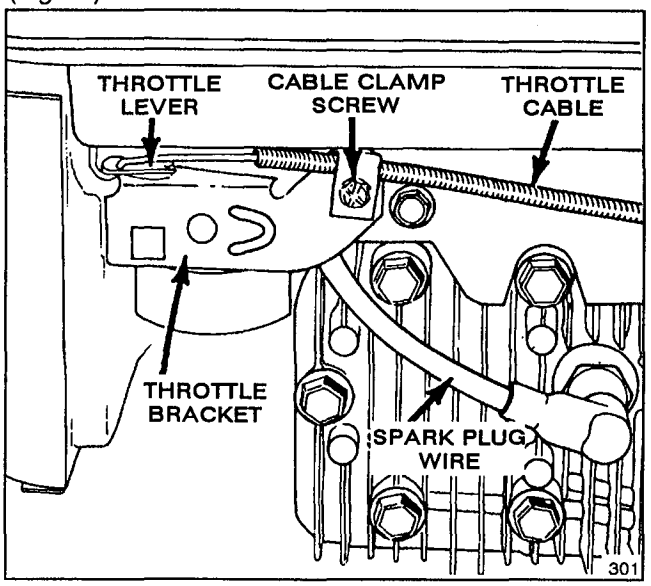

Figure 14

2. Move throttle control to FAST.

3. Loosen cable clamp screw until throttle cable slides (Fig. 14). Align holes in throttle lever and throttle bracket using a 1/8" diameter drill (Fig. 15). Tighten cable clamp screw to lock adjustment in place.

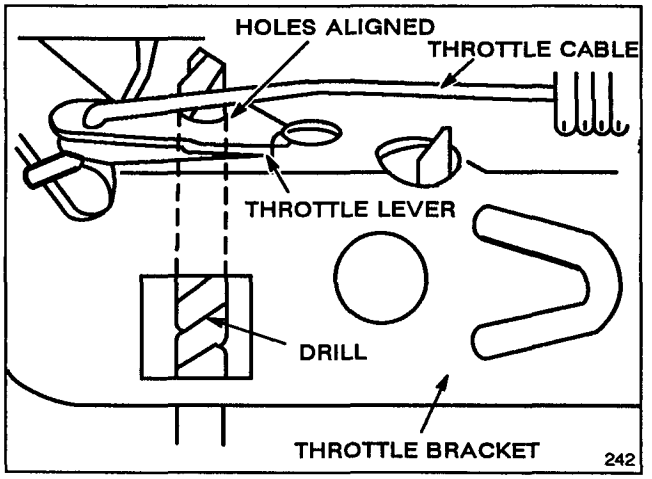

Figure 15

ADJUSTING WHEEL DRIVE (self-propelled model only)

If mower does not self-propel or has a tendency to creep forward when drive is not engaged, adjust wheel drive control knob on rear of gear box.

1. ADJUSTMENT (Fig. 16)—Rotate control knob clockwise 1/2 turn if mower does not self-propel. If mower creeps forward, rotate knob 1/2 turn counterclockwise to loosen belt.

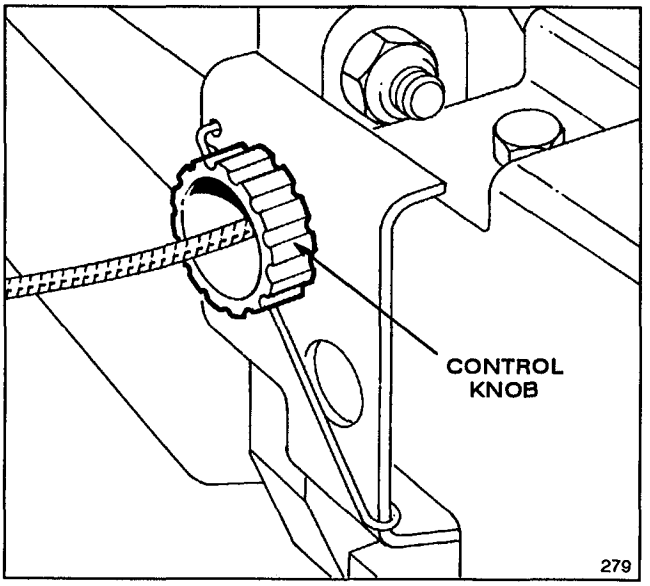

Figure 16

2. CHECK ADJUSTMENT—Adjustment is correct when rear wheels stop turning and control bar is about 1-1/2 inches from handle (Fig. 17).

3. Repeat steps 1 and 2 until properly adjusted.

MAINTENANCE

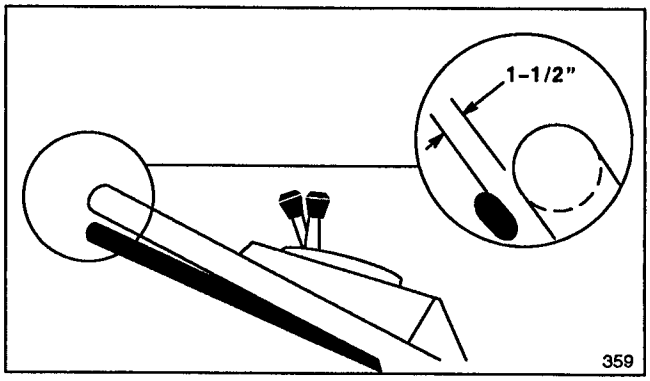

Figure 17

INSPECTING/REMOVING/SHARPENING BLADE

Always mow with a sharp blade. A sharp blade cuts cleanly and without tearing or shredding the grass blades like a dull blade.

1. Stop engine and pull wire off spark plug (Fig. 14).

2. Drain gasoline from fuel tank; refer to Draining Gasoline, page 7.

3. Tip mower on its right side (Fig. 18). Avoid rotating the blade because starting problems may result.

4. INSPECTING BLADE—Carefully examine blade for sharpness and wear, especially where flat and curved parts meet (Fig. 19A). Since sand and abrasive material can wear away the metal that connects the flat and curved parts of the blade, check blade before using the mower. If a slot or wear is noticed, (Fig. 19B & C), replace blade. Refer to step 5.

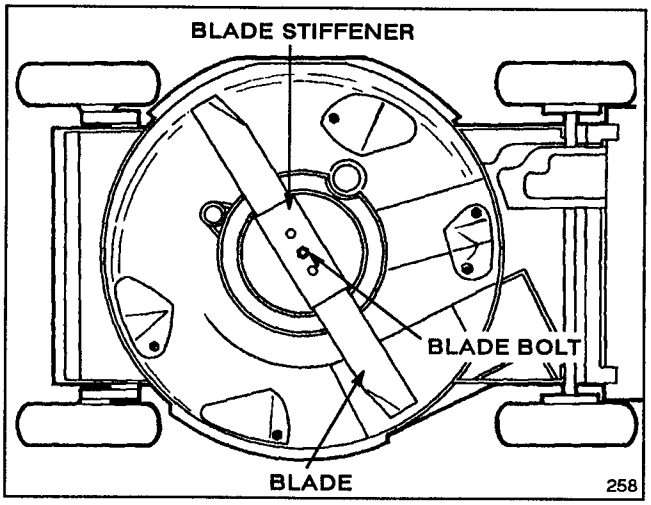

Figure 18

Note: For best performance, install new blade before cutting season begins. During the year, file down small nicks to maintain the cutting edge.

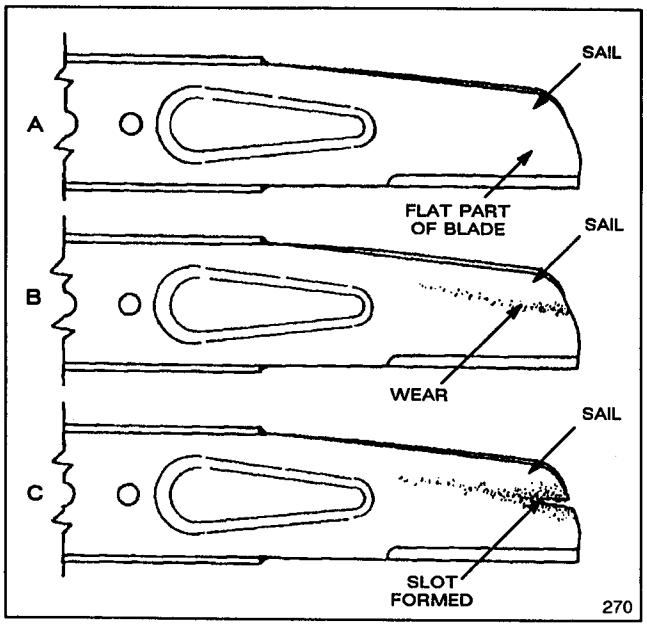

Figure 19

⚠ CAUTION

If blade is allowed to wear, a slot may form near the sail. Eventually a piece of blade may break off resulting in serious injury to yourself or a bystander.

5. REMOVING BLADE—Grasp end of blade using a rag or thickly padded glove. Remove blade bolt, lockwasher, blade stiffener, and blade (Fig. 18).

6. SHARPENING BLADE—Using a file, sharpen top side of blade and maintain original cutting angle (Fig. 20). The blade will remain balanced if same amount of material is removed from both cutting edges.

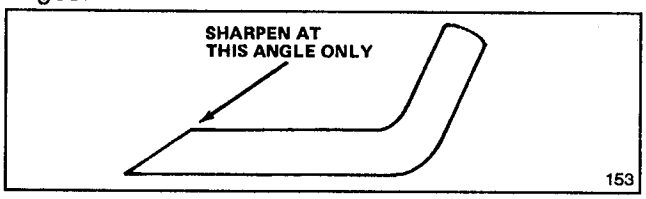

Figure 20

IMPORTANT: Check balance of blade by putting it on a blade balancer. An inexpensive balancer can be purchased at a hardware store. A balanced blade stays in a horizontal position and an unbalanced blade settles to the heavy side. If blade is not balanced, file more metal off cutting edge on heavy end of blade.

7. Install sharp, balanced TORO blade, blade stiffener, lockwasher, and blade bolt. Sail part of blade must point toward top of mower housing to ensure correct installation. Tighten the blade bolt to 50 ft-lb (68 N·m).

LUBRICATION

After every 25 operating hours or when season ends, front and rear wheels must be lubricated.

1. Apply 2 or 3 drops of light oil on inside and outside of all wheel bolts. Spin wheels to distribute oil into bushings. Wipe up excess oil.

2. SELF-PROPELLED MODEL ONLY—Move rear wheel height-of-cut levers to "C" setting. Wipe grease fittings with clean rag (Fig. 21). Install grease gun onto fitting and gently apply 1 or 2 pumps of #2 Multi-Purpose Lithium Base Grease. Excess pressure may damage seals.

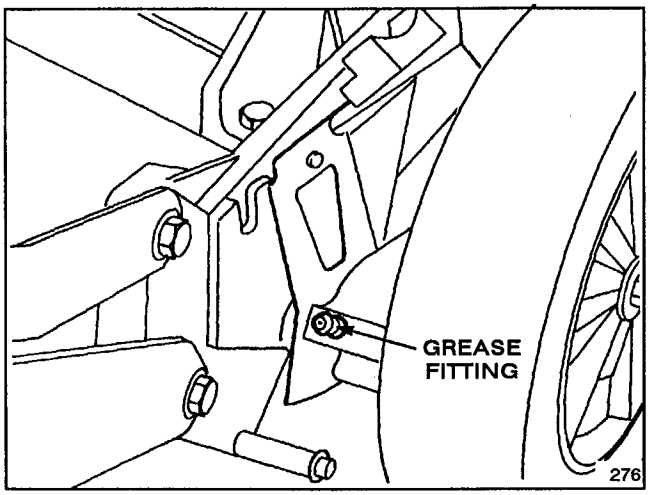

Self-propelled model only

Figure 21

ADJUSTING BRAKE CABLE

Whenever a new blade brake cable assembly is installed, an adjustment is required.

1. Stop the engine. Pull the wire off the spark plug (Fig. 14).

2. CHECK ADJUSTMENT (Fig. 22)—Move control bar toward handle until slack in wire is removed. Gap between brake lever and handle must be 1/8"-3/16". See step 3 for adjustment.

3. ADJUST CABLE CONDUIT (Fig. 22)—Loosen nut on cable bracket. Insert 1/8"-3/16" object between brake lever and handle. Pull down on cable conduit until all slack is removed from wire. Then tighten nut.

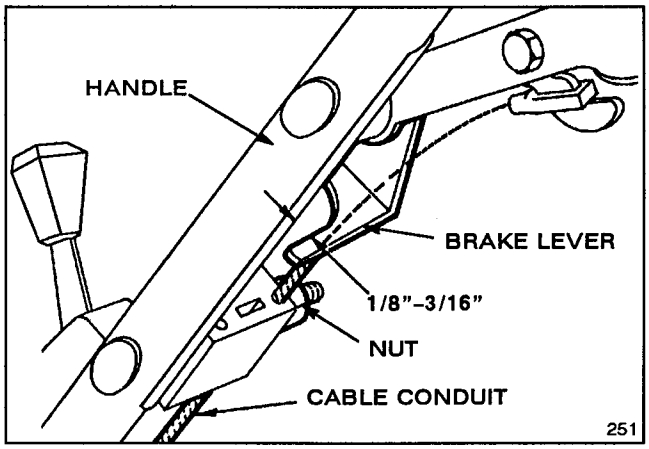

Figure 22

CLEANING MOWER HOUSING

To ensure best performance, keep underside of mower housing clean.

1. Drain gasoline from fuel tank: refer to Draining Gasoline, page 7.

2. Tip mower on its right side (Fig. 23). Avoid rotating blade because starting problems may result.

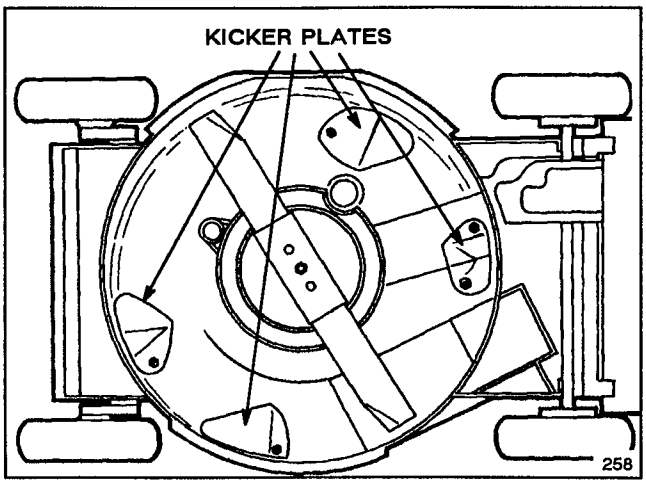

Figure 23

3. Remove dirt and grass clippings that stick to housing with a hardwood scraper. Avoid burrs and sharp edges. Be especially careful to keep kickers on underside of mower housing free of debris.

PREPARING MOWER FOR STORAGE

1. For long term storage, either drain gasoline from fuel tank or use a fuel additive before storing. To drain gasoline, refer to Draining Gasoline, page 7. After fuel is drained, start engine and let it idle until all fuel is consumed and engine stops. Repeat the starting procedure two more times to ensure all gas is removed from the engine. If gasoline is not drained, gum-like varnish deposits will form and cause poor engine operation, even starting problems.

Fuel can be left in gas tank only if a fuel additive, such as Toro's Stabilizer/Conditioner, is added to gasoline before storing. Toro's Stabilizer/Conditioner is a petroleum distillate based conditioner/stabilizer. Toro does not recommend stabilizers with an alcohol base, such as ethanol, methanol or isopropyl. Use fuel additive in recommended quantities as specified on container.

Under normal conditions, fuel additives remain effective in fuel for 6-8 months.

2. Drain oil: refer to Changing Crankcase Oil, page 7. After oil is drained, do not fill crankcase with oil until the following steps (3-10) are completed.

MAINTENANCE

3. Remove spark plug and pour 2 tablespoons of SAE 10W30 oil into hole in cylinder. Pull starter rope slowly to coat inside of cylinder. Install spark plug and tighten to 15 ft-lb (20 N·m). **DO NOT INSTALL WIRE ON SPARK PLUG.**

4. Clean mower housing: refer to Cleaning Mower Housing, page 10.

5. Check condition of blade: refer to Inspecting/Removing/Sharpening Blade, page 9.

6. Tighten all nuts, bolts, and screws.

7. Clean dirt and chaff from cylinder, cylinder head fins, and blower housing. Also remove grass clippings, dirt, and grime from external parts of the engine, shrouding, and top of mower housing.

8. Clean air cleaner: refer to Servicing Air Cleaner, page 6.

9. Lubricate the wheels: refer to Lubrication, page 9.

10. Touch up all rusted or chipped paint surfaces. Toro Re-Kote paint is available from an Authorized TORO Service Dealer.

11. Fill crankcase with oil; refer to Fill Crankcase With Oil, page 3.

12. Store mower in a clean, dry place. Cover mower to keep it clean and protected.

OPTIONAL EQUIPMENT

For special conditions, the following accessories may be purchased at your local Authorized Toro Service Dealer.

1. Rear Bagging Kit (Model No. 59174 for self-propelled models, Model No. 59179 for hand push models)—Install discharge tunnel and rear mounting grass bag to convert Recycler to a rear bagging mower (Fig. 24). Includes Recycling Plug.

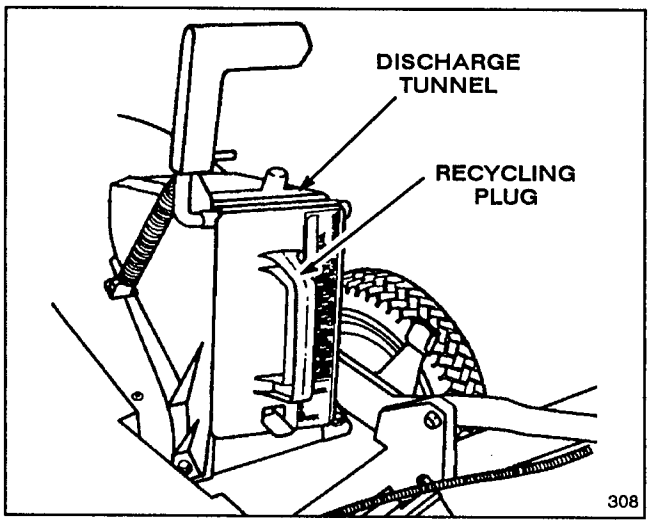

Figure 24

2. Dethatcher Kit, Model No. 59131—Installs in minutes. Front mounted for easy maneuverability. Spring tines loosen thatch for recycling or clean vacuuming into grass bag (Fig. 25).

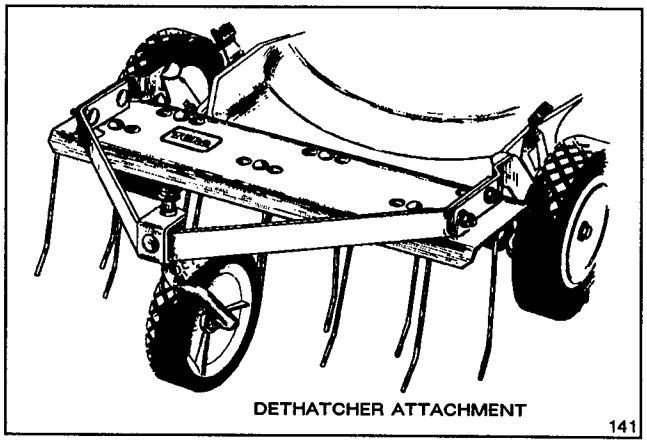

Figure 25

3. Spark Arrestor (Briggs & Stratton Part No. 398067)—If a spark arrestor is required because of local, state, or federal regulations, it may be purchased at your local Authorized Toro Service Dealer. If mower is operated on any California forest, brush, or grass covered land without a properly operating spark arrestor, the operator is violating state law, Section 4442 Public Resources Code.

TORO SERVICE SUPPORT

If help - concerning safety, set-up, operation, maintenance, or troubleshooting - is ever needed, contact the local Authorized TORO Service Dealer or Distributor. Refer to the "Yellow Pages" for assistance. In addition to skilled service technicians, the dealer and distributor have factory approved accessories and replacement parts. Keep your Toro all TORO. Buy genuine TORO replacement parts and accessories.

PRODUCT IDENTIFICATION

A model and a serial number decal is located at rear of mower housing on the hand push model and on the underside of the control panel on the self-propelled model. Always refer to specific numbers on this decal in correspondence or when replacement parts are needed.

The Toro Promise

A Two Year Limited Warranty
On All
Gasoline Powered Consumer Products

The Toro Company promises to repair these TORO Products if defective in materials or workmanship. The following time periods from the date of purchase apply:

Residential Product	2 Years
Residential Products Used Commercially	45 Days
Straight Shaft Trimmers, 3 H.P. Edger, Back Pack Blowers, 5 H.P. Lawn Vac, 5 H.P. Blower Used Commercially	90 Days

The cost of parts and labor are included, but the customer pays the transportation costs. Just return any residential product to an Authorized TORO Service Dealer or TORO Distributor.

Should you feel your TORO Product is defective and wish to rely on The Toro Promise, the following procedure is recommended:

1. Contact any Authorized TORO Service Dealer, TORO Master Service Dealer, or TORO Distributor (the Yellow Pages of your telephone directory is a good reference source).
2. He will either instruct you to return the product to him or recommend another Authorized TORO Service outlet which might be more convenient.
3. Bring the product along with your original sales slip, or other evidence of purchase date, to the service dealer.
4. The servicing dealer will inspect the unit, advise you whether the product is defective and, if so, make all repairs necessary to correct the defect without extra charge to you.

If for any reason you are dissatisfied with the analysis of the defect or the service performed, you may contact us.

Write: TORO Customer Service Dept.
8111 Lyndale Avenue South
Minneapolis, MN 55420

The above remedy of product defects through repair by an Authorized TORO Service Dealer is the purchaser's sole remedy for any defect.

THERE IS NO OTHER EXPRESS WARRANTY EXCEPT FOR THE TORO STARTING GUARANTEE ON GTS ENGINES. ALL IMPLIED WARRANTIES OF MERCHANTIBILITY AND FITNESS FOR USE ARE LIMITED TO THE DURATION OF THE EXPRESS WARRANTY.

Some states do not allow limitations on how long implied warranty lasts, so the above limitation may not apply to you.

This Warranty applies only to parts or components which are defective and does not cover repairs necessary due to normal wear, misuse, accidents, or lack of proper maintenance. Regular, routine maintenance of the unit to keep it in proper operating condition is the responsibility of the owner.

All warranty repairs reimbursable under The Toro Promise must be performed by an Authorized Toro Service Dealer using Toro approved replacement parts.

Repairs or attempted repairs by anyone other than an Authorized TORO Service Dealer are not reimbursable under the TORO Promise. In addition, these unauthorized repair attempts may result in additional malfunctions, the correction of which is not covered by warranty.

THE TORO COMPANY IS NOT LIABLE FOR INDIRECT OR CONSEQUENTIAL DAMAGES IN CONNECTION WITH THE USE OF THE PRODUCT INCLUDING ANY COST OR EXPENSE OF PROVIDING SUBSTITUTE EQUIPMENT OR SERVICE DURING PERIODS OF MALFUNCTION OR NON-USE.

Some states do not allow the exclusion of incidental or consequential damages, so the above exclusion may not apply to you.

This warranty gives you specific legal rights, and you may also have other rights which vary from state to state.

COUNTRIES OTHER THAN THE UNITED STATES OR CANADA

Customers who have purchased TORO products exported from the United States or Canada should contact their TORO Distributor (Dealer) to obtain guarantee policies for your country, province, or state. If for any reason you are dissatisfied with your Distributor's service or have difficulty obtaining guarantee information, contact the TORO importer. If all other remedies fail, you may contact us at The Toro Company.