FORM NO. 3314-554

TORO®

MODEL NO. 16585 - 1000001 & UP
MODEL NO. 16785 - 1000001 & UP

OPERATOR'S MANUAL

21" (0.53 M) HP & SP SIDE DISCHARGE

FINGERTIP START

⚠ SAFETY INSTRUCTIONS

This mower "meets or exceeds CPSC blade safety requirements for walk behind rotary mowers" and the B71.1-1986 specifications of the American National Standards Institute. However, improper use or maintenance by the operator or owner can result in injury. To reduce the potential for injury, comply with these safety instructions and always pay attention to the safety alert symbol ⚠. Failure to comply with these instructions may result in personal injury.

BEFORE OPERATING

1. Read this manual carefully before operating the mower. Become familiar with the controls and proper use of the mower. Never allow children to operate the mower or adults to operate it without proper instructions.

2. Keep everyone, especially children and pets, away from area of operation. Thoroughly inspect area where mower will be used and remove sticks, stones, wire, and debris.

3. Wear long pants and substantial shoes. Do not operate mower while wearing open sandals or when barefoot.

4. Always wear safety glasses or eye shields during operation to protect eyes from foreign objects that may be thrown from the machine.

5. Check fuel level before starting engine. Do not fill fuel tank indoors, when the engine is running, or until engine cools for several minutes after running. Wipe up spilled gasoline before starting engine.

6. Keep all guards, shields, and safety devices in place. Repair or replace defective or damaged parts, including safety decals. Check safety devices before each use or mower.

7. Disengage self-propelled drive before starting engine. Engine and blade are designed to stop when control bar is released. Ensure engine kill control bar and brake function properly before each use of mower.

WHILE OPERATING

8. Do not run engine indoors.

9. Always maintain secure footing. Keep a firm grip on the handle and walk; never run. Never operate mower in wet grass. Mow only in daylight or in good artificial light.

10. Mow across the face of slopes; never up and down. Use extreme caution when changing direction on slopes. Do not mow excessively steep slopes.

11. Keep face, hands, and feet away from the mower housing and cutter blade when the engine is running. Stay behind the handle until the engine stops and keep clear of discharge opening at all times.

12. During operation, grass deflector or complete bagging assembly must be installed on mower.

13. Shut engine off and wait for all moving parts to stop before unclogging chute or removing grass bag. Use a stick, not your hand, to unclog chute.

14. Since the blade rotates for a few seconds after the control bar is released, stay behind the handle until all moving parts stop.

15. After striking a foreign object or if mower vibrates abnormally, stop engine and remove wire from spark plug. Check mower for damage and make all repairs before using mower again.

16. Stop the engine before adjusting the height-of-cut.

17. Stop the engine when crossing a gravel driveway, road or sidewalk.

18. Stop engine before leaving the operator's position—behind the handle. Disconnect wire from spark plug if mower will be unattended.

19. Do not touch engine while it is running or shortly after it is stopped because engine will be hot enough to cause a burn.

MAINTENANCE

20. Perform only those maintenance instructions described in this manual. If major repairs are ever needed or if assistance is desired, contact your local Authorized TORO Service Dealer.

21. Before mower is cleaned, inspected, serviced, or adjusted, stop engine and disconnect wire from spark plug. Keep wire away from plug to prevent accidental starting.

©The Toro Company-1990

⚠ SAFETY INSTRUCTIONS

22. To ensure the mower is in safe operating condition, frequently check and keep all nuts, bolts, and screws tight. Ensure blade bolt is tightened to the proper specification.

23. To reduce fire hazard, keep engine free of excessive grease, grass, leaves, and accumulations of dirt.

24. Check optional grass bag frequently for wear, tears or deterioration. Replace with a new, genuine Toro bag for your protection.

25. Allow engine to cool before storing mower in any enclosure. Do not store mower near any open flame or where gasoline fumes may be ignited by a spark.

26. Do not overspeed the engine by changing governor settings.

27. At the time of manufacture, the mower conformed to the safety standards in effect for rotary mowers. To ensure best performance and continued safety certification of the mower, use genuine TORO replacement parts and accessories. Replacement parts and accessories made by other manufacturers may result in non-conformance with the safety standards, and that could be dangerous.

⚠ SAFETY DECALS AND INSTRUCTIONS

Safety decals and instructions are easily visible to the operator and are located near any area of potential danger. Replace any decal that is damaged or lost.

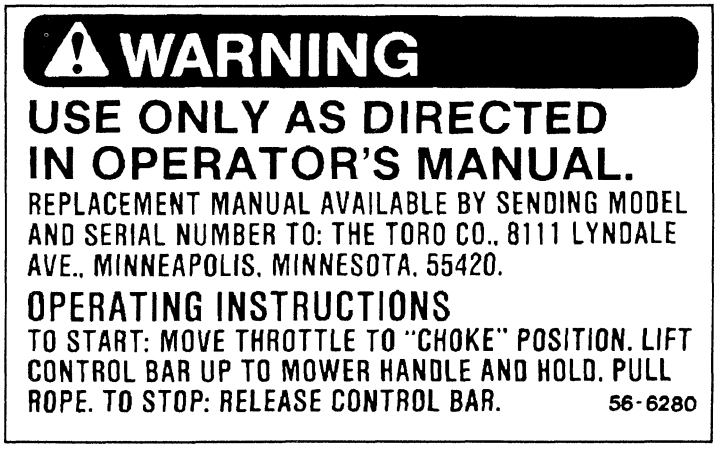

ON UPPER HANDLE
(Part No. 56-6280



ON MOWER HOUSING
(Part No. 39-5770)

TABLE OF CONTENTS

	Page
Set-Up Instructions	3
Before Operating	3
Operating Instructions	4
Maintenance	6
Servicing Air Cleaner	6
Replacing Spark Plug	6
Draining Gasoline	6
Inspecting/Removing/Sharpening Blade	6
Lubrication	7
Checking Transmission Oil Level	7
Adjusting Wheel Drive Control	8
Adjusting Blade Brake	8
Cleaning Mower Housing	9
Preparing Mower For Storage	9
Optional Equipment	10
Toro Service Support	10
Product Identification	10
The Toro Starting Guarantee	11
Guaranteed To Start Maintenance Record	13
The Toro Promise	

SET-UP INSTRUCTIONS

INSTALL HANDLES AND STARTER ROPE

1. LOWER HANDLES (Fig. 1)—Push ends of handle together and install on pivot pins. Move handle and latches backward until handle studs snap into center hole. Push hair pin cotters through holes in pivot pins.

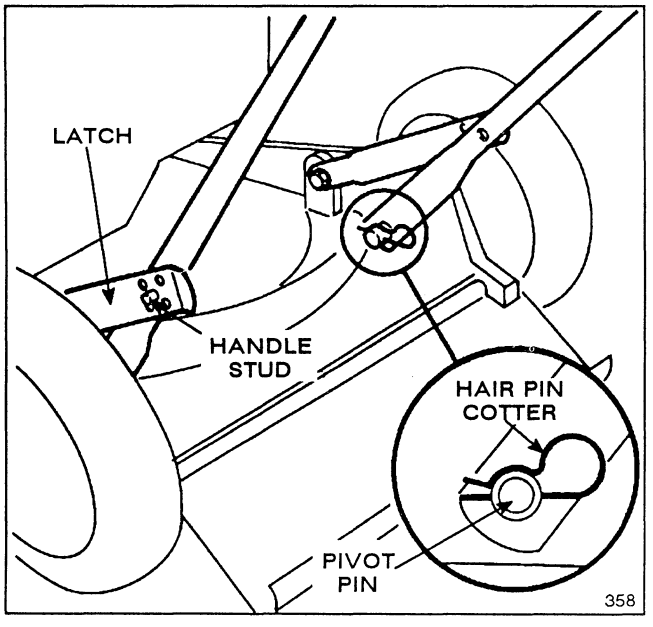

Figure 1

2. UPPER HANDLE (Fig. 2)—Secure upper and lower handles in place with handle screws and flange nuts. Control cables must be behind lower handle cross member. Secure control cables in position with cable tie.

3. STARTER ROPE (Fig. 3)—By squeezing control bar (Fig. 5) against handle, blade brake will release and allow rope to be pulled easily up through rope guide. Pull starter rope through opening in rope guide.

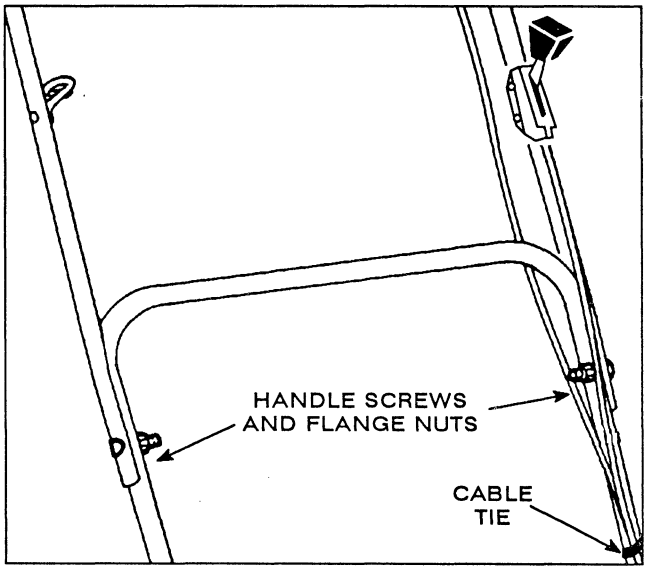

Figure 2

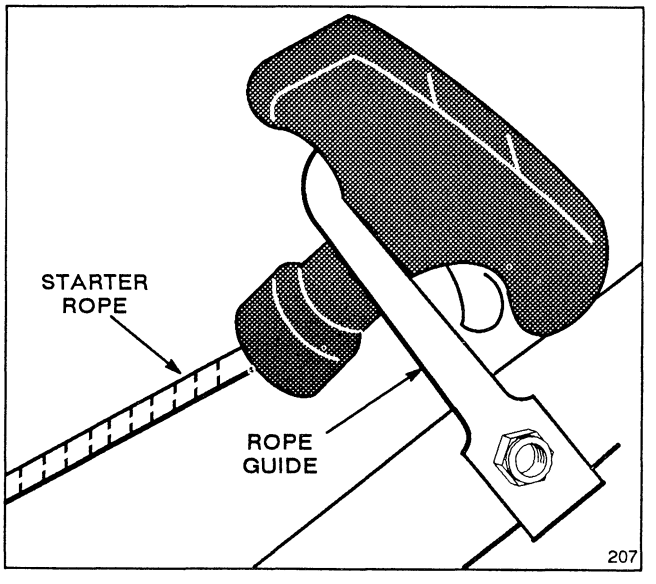

Figure 3

BEFORE OPERATING

WARNING

DANGER: Gasoline is extremely flammable and explosive under certain conditions. Do not smoke when handling fuel and keep fuel far away from open flames and sparks. Never buy more than a 30 day supply of gasoline. Store it in an approved container. Keep gasoline out of reach of children.

Refuel outdoors and only when engine is cold. Do not fill tank full. Fill tank to within 1/4" to 1/2" (6 to 13 mm) from top of tank, not into the filler neck. This space is for expansion of fuel. Use funnel or spout to prevent spilling. Wipe up any spilled gas.

BEFORE OPERATING

MIX GASOLINE AND OIL (Fig. 4)

1. APPROVED OIL—For simplicity and best engine performance, mix the contents of one bottle of Toro 50:1 Two-Cycle Oil with two gallons of fresh, unleaded regular gasoline. Leaded regular gasoline may be used if unleaded regular is not available.

Toro Two-Cycle Oil is specially formulated to provide superior lubrication, make starting easy, and prolong engine life. if Toro Two-Cycle Oil is not available, mix two gallons of gasoline and 5.2 ounces of another high grade two-cycle oil that has the NMMA or BIA-TCW certification printed on the label.

IMPORTANT: YOU CAN ALSO USE TORO "EASY-MIX" TWO-CYCLE OIL (3.2 OUNCE BOTTLE MIXED ONE PER GALLON OF GASOLINE) IN THIS TORO TWO-CYCLE ENGINE.

NEVER USE AUTOMOTIVE OIL (i.e. SAE 30, 10W30 etc.), TWO-CYCLE OIL THAT IS NOT CERTIFIED NMMA/BIA-TCW, OR THE WRONG MIX RATIO BECAUSE THE ENGINE CAN BE DAMAGED, AND IT WOULD NOT BE COVERED BY THE TORO WARRANTY.

Toro also recommends that Toro Stabilizer/Conditioner be used regularly in all Toro gasoline powered products during operation and storage seasons. Toro Stabilizer/Conditioner cleans the engine during operation and prevents gum-like varnish deposits from forming in the engine during periods of storage.

2. Mixing Gasoline and Oil—Pour correct amount of two-cycle oil into an approved gasoline container and add a half gallon of gasoline. Install cap on gasoline container and shake the container to mix oil and gas thoroughly. Remove cap and add remaining amount of gasoline.

IMPORTANT: NEVER USE METHANOL, GASOLINE CONTAINING METHANOL, GASOHOL CONTAINING MORE THAN 10% ETHANOL, PREMIUM GASOLINE, OR WHITE GAS BECAUSE ENGINE FUEL SYSTEM DAMAGE COULD RESULT.

DO NOT USE FUEL ADDITIVES OTHER THAN THOSE MANUFACTURED FOR FUEL STABILIZATION DURING STORAGE SUCH AS TORO'S STABILIZER/CONDITIONER OR A SIMILAR PRODUCT. TORO'S STABILIZER/CONDITIONER IS A PETROLEUM DISTILLATE BASED CONDITIONER/STABILIZER. TORO DOES NOT RECOMMEND STABILIZERS WITH AN ALCOHOL BASE SUCH AS ETHANOL, METHANOL OR ISOPROPYL. ADDITIVES SHOULD NOT BE USED TO TRY TO ENHANCE THE POWER OR PERFORMANCE OF MACHINE.

NOTE: Do not mix gasoline and oil in the product fuel tank. Oil that is at room temperature mixes easier and more thoroughly than cold oil.

50:1 GAS/OIL Mixing Chart

U.S. GALLON	
Gasoline	**Oil**
1 gallon	2.6 oz.
2 gallons	5.2 oz.

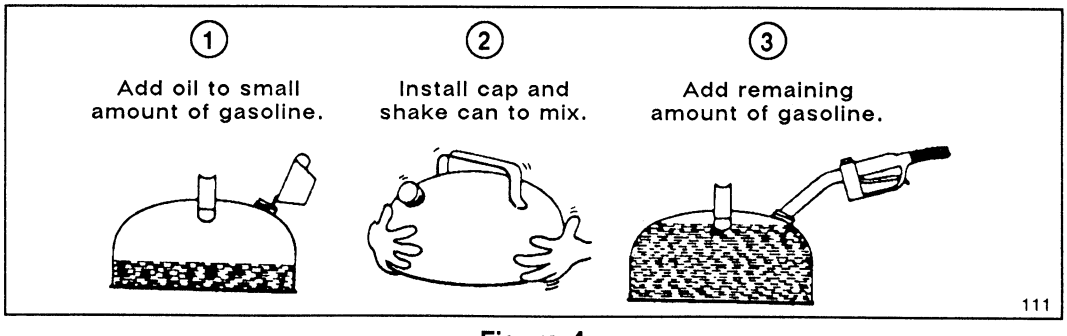

Figure 4

OPERATING INSTRUCTIONS

OPERATING TIPS

1. BEFORE OPERATING—Ensure engine, brake and control bar function properly. When control bar is released, engine and blade are designed to stop.

2. CUTTING AND BAGGING—To improve quality of cut, discharge clippings toward previously cut area. Best results are achieved when engine is running at maximum speed and only about 1/3 of the grass blade is cut. If long grass must be cut, use highest height-of-cut setting for first mowing. Then recut the grass at a more normal setting. If too long of grass is cut, mower may plug and cause engine to stall.

3. SHARP BLADE—Begin each cutting season with a sharp blade. Periodically file down nicks.

OPERATING INSTRUCTIONS

STARTING, STOPPING, AND SELF-PROPELLING

1. CONTROLS (Fig. 5 & 6)—Wheel drive control (self-propelled model only), throttle/choke, control bar, and fingertip starter are on upper handle.

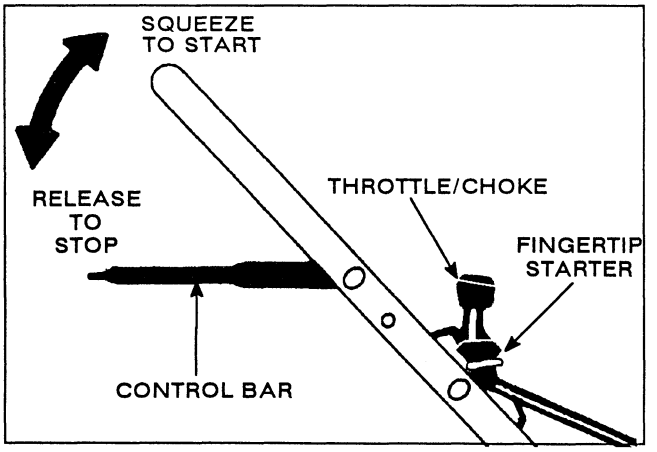

Figure 5

Hand push model 16585

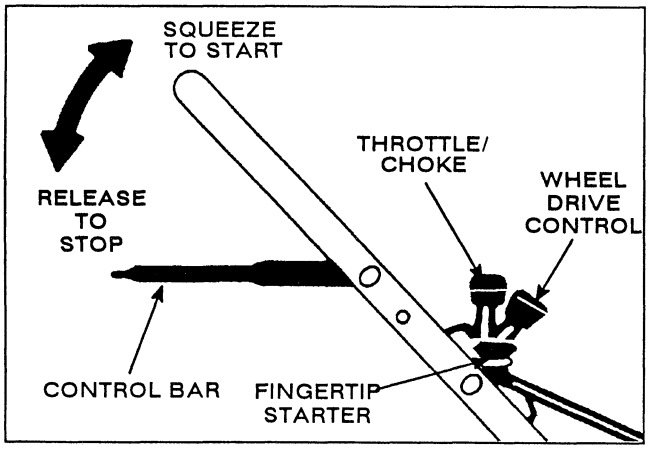

Self-propelled model 16785

Figure 6

2. STARTING (Fig. 5 & 6)—Push spark plug wire onto spark plug (Fig. 9). Move wheel drive control to DISENGAGE (model 16785 only) and throttle to CHOKE. Cover hole in center of primer with thumb and push once (Fig. 9). Hold control bar against handle. Pull fingertip starter out until positive engagement results; then pull vigorously to start the engine. Regulate throttle as desired when engine starts .

NOTE: CHOKE and PRIMER may not be required when warm engine is being started.

3. SELF-PROPELLING (Fig. 6)—Move wheel drive control to ENGAGE (model 16785). Front wheels will now drive mower. For maneuvering and making turns, push down on handle to raise front wheels slightly off grass. Move control to DISENGAGE detent to stop front wheel drive.

4. STOPPING (Fig. 5 & 6)—Release control bar to stop engine and blade. Pull wire off spark plug if mower will be unattended or not used.

ADJUSTING HEIGHT-OF-CUT

Five notches cast into the housing represent each graduated height-of-cut increment (Fig. 7).

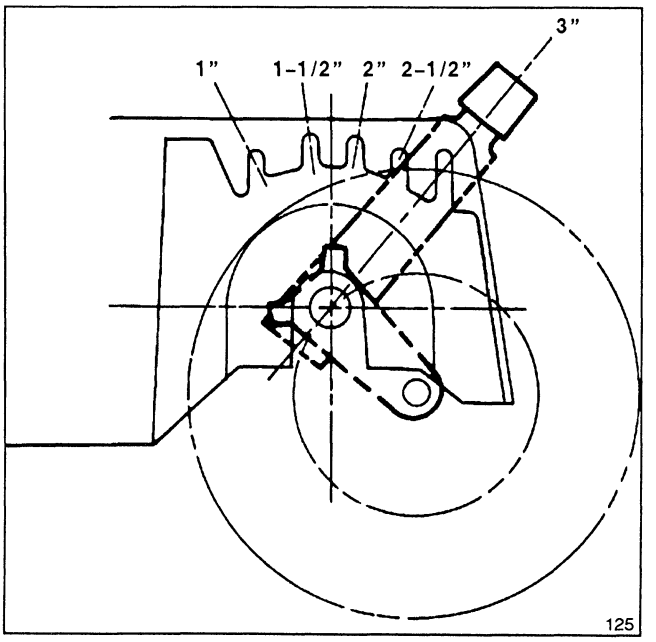

Figure 7

1. Stop the engine and pull the wire off the spark plug (Fig. 9).

2. Squeeze adjusting lever toward wheel (Fig. 8) and move it to the desired setting. Ensure pin on adjusting lever engages notch in housing. Adjust all wheels to the same setting.

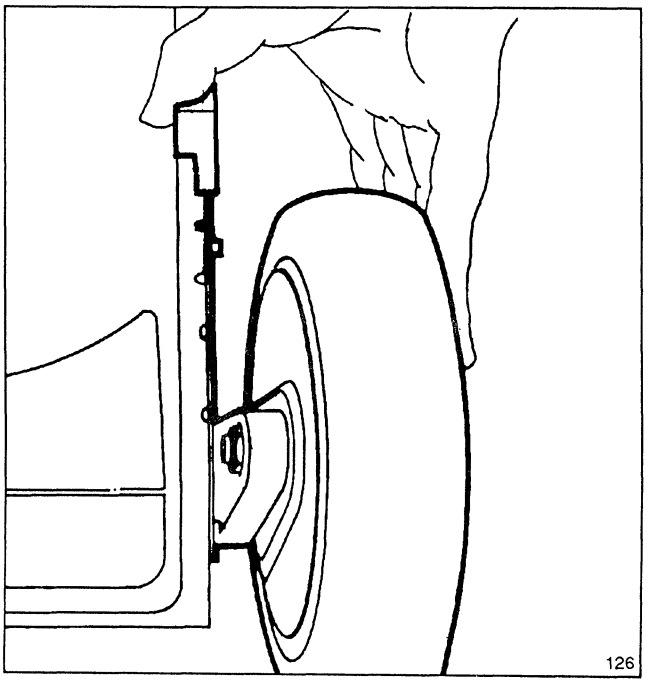

Figure 8

MAINTENANCE

CAUTION

Pull wire off spark plug before performing adjustments or maintenance.

SERVICING AIR CLEANER (Fig. 9)

Normally, clean air cleaner after every 25 operating hours. More frequent cleaning is required when mower is operated in dusty or dirty conditions.

1. Stop engine and pull wire off spark plug.

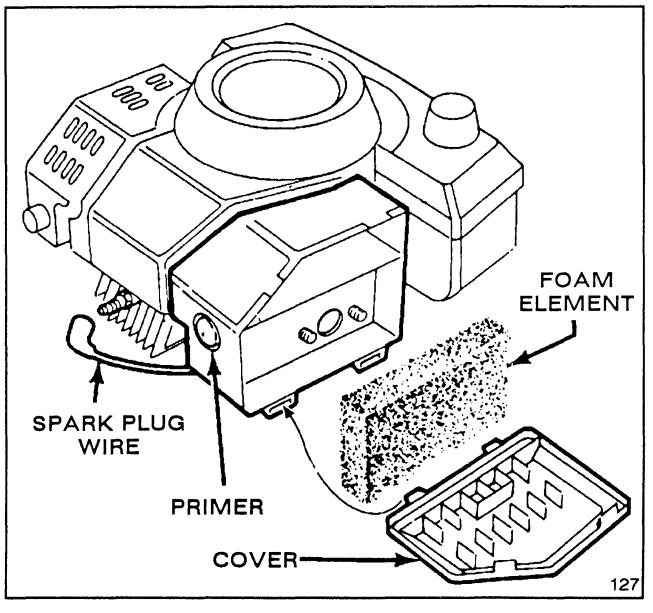

Figure 9

2. Lift tabs at top of air cleaner cover and pivot cover down. Clean cover thoroughly.

3. If outside of foam element is dirty, remove it from air cleaner body. Clean thoroughly.

A. WASH foam element in a solution of liquid soap and warm water. Squeeze to remove dirt, but do not twist because foam may tear. Rinse thoroughly in clear water.

B. DRY by wrapping in a clean rag. Squeeze rag and foam element to dry.

C. SATURATE element with 5 teaspoons (25 ml) of SAE 30 engine oil. Squeeze element to remove excess oil and to distribute oil thoroughly. A damp element is desirable.

4. Reinstall foam element and air cleaner cover.

IMPORTANT: Do not operate engine without air cleaner element because extreme engine wear and damage will likely result.

REPLACING SPARK PLUG

Use an NGK BPMR4A spark plug or equivalent. Correct air gap is 0.032" (0.81 mm). Remove plug after every 25 operating hours and check its condition.

1. Stop engine and pull wire off spark plug (Fig. 9).

2. Clean around spark plug and remove plug from cylinder head (Fig. 9).

3. Set air gap at 0.032" (0.81 mm) (Fig. 10). Install correctly gapped spark plug and gasket seal. Tighten plug firmly to 10 ft-lb (13.6 N·m).

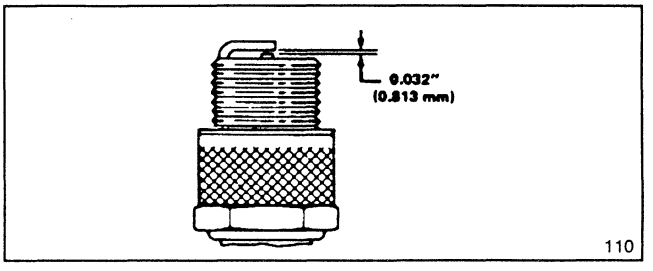

Figure 10

DRAINING GASOLINE

1. Stop engine and pull wire off spark plug (Fig. 9).

2. Remove cap from fuel tank and use pump-type syphon to drain fuel into clean gas can.

Note: This is the only procedure recommended for draining fuel.

INSPECTING/REMOVING/SHARPENING BLADE

1. Stop engine and pull wire off spark plug (Fig. 9).

2. Drain gasoline from fuel tank; refer to Draining Gasoline, page 6.

3. Tip mower on its left side (Fig. 11).

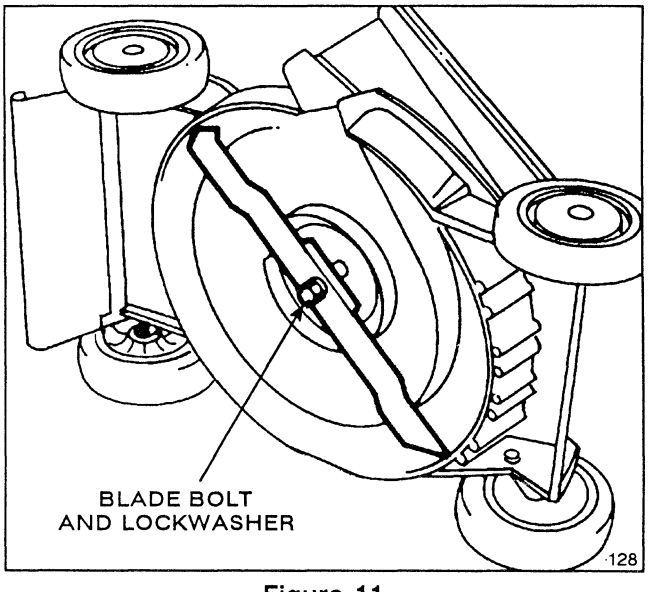

Figure 11

MAINTENANCE

4. INSPECTING BLADE—Carefully examine blade for sharpness and wear, especially where flat and curved parts meet (Fig. 12A). Since sand and abrasive material can wear away the metal that connects the flat and curved parts of the blade, check blade before using the mower. If a slot or wear is noticed, (Fig. 12B & C), replace blade. Refer to step 5.

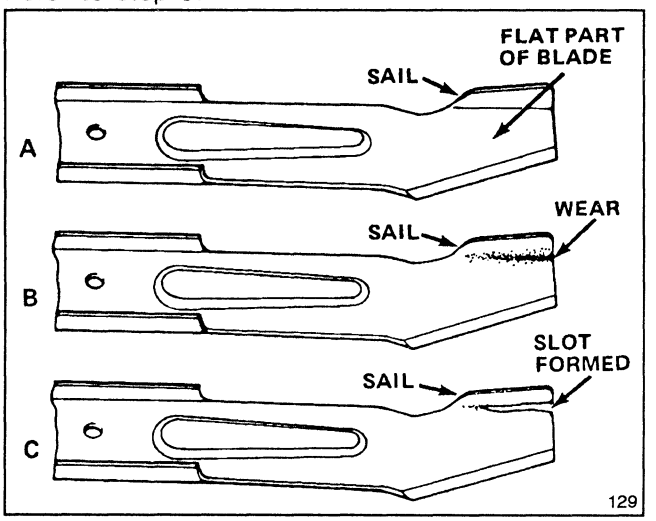

Figure 12

Note: For best performance, install new blade before cutting season begins. During the year, file down small nicks to maintain the cutting edge.

⚠ CAUTION

If blade is allowed to wear, a slot may form near the sail. Eventually a piece of blade may break off resulting in serious injury to yourself or a bystander.

5. REMOVING BLADE—Grasp end of blade using a rag or thickly padded glove. Remove blade bolt, lockwasher and blade (Fig. 11).

6. SHARPENING BLADE—Using a file, sharpen top side of blade and maintain original cutting angle (Fig. 13). The blade will remain balanced if same amount of material is removed from both cutting edges.

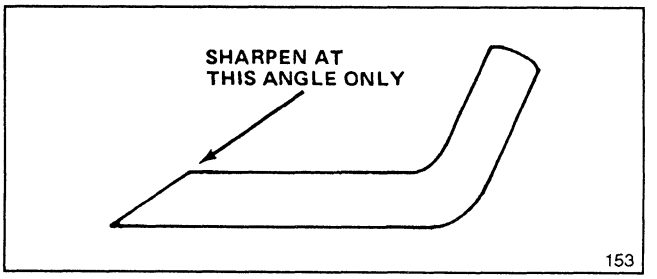

Figure 13

IMPORTANT: Check balance of blade by putting it on a blade balancer. An inexpensive balancer can be purchased at a hardware store. A balanced blade stays in a horizontal position and an unbalanced blade settles to the heavy side. If blade is not balanced, file more metal off cutting edge on heavy end of blade.

7. Install sharp, balanced blade with lockwasher and blade bolt. Sail part of blade must point toward top of mower housing to ensure correct installation. Tighten blade bolt to 50 ft-lb (68 N·m).

LUBRICATION

After every 25 operating hours or when season ends, front and rear wheels must be lubricated.

1. OIL FRONT AND REAR WHEELS—Apply 2 or 3 drops of light oil on inside and outside of wheel bolts. Spin wheels to distribute oil into bushings. Wipe up excess oil.

2. GREASE FRONT AXLE PIVOTS (Fig. 14) (model 16785 only)—Adjust height-of-cut to 3-inch setting. Wipe grease fitting with a clean rag. Install grease gun onto fitting and gently apply 2 or 3 pumps of #2 Multi-Purpose Lithium Base Grease. Excess pressure may damage seals.

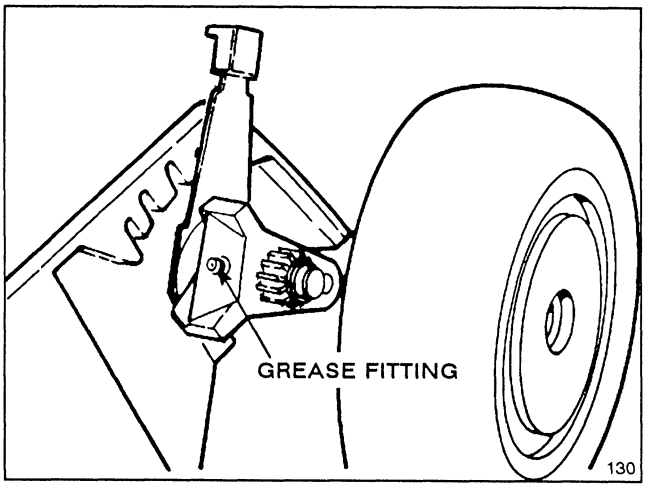

Figure 14

CHECKING TRANSMISSION OIL LEVEL

The transmission is filled with E.P. 90 gear oil that has a GL-5 or GL-6 rating. Level of gear oil must be checked at least every 25 operating hours, before storage and before the mowing season begins.

1. Stop engine and pull wire off spark plug (Fig. 9). Remove two screws and lift off transmission cover (Fig. 15).

MAINTENANCE

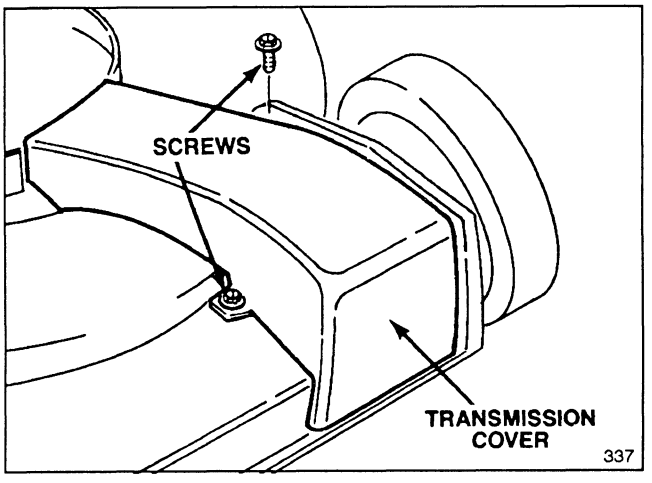

Figure 15

2. CHECKING GEAR OIL LEVEL (Fig. 16)—Position mower on level surface and clean around plastic plug. Remove plastic plug and watch for oil to ooze out of hole. If gear oil oozes out, quickly install plastic plug because oil is at proper level. If oil does not flow, add gear oil: see step 3.

IMPORTANT: Low oil level may indicate a leak where axle goes through both sides of transmission case. Transmission case should be inspected by an Authorized TORO Service Dealer.

3. ADDING GEAR OIL—Slowly add E.P. 90 gear oil that has a GL-5 or GL-6 rating. Stop when oil oozes out of hole in gear case, and quickly install plastic plug. DO NOT OVERTIGHTEN PLASTIC PLUG BECAUSE THREADS MAY STRIP.

Note: A clean Plews type oil container or any other clean container with a small tip can be used to add oil. Using a dirty oil container could contaminate transmission case and eventually cause damage.

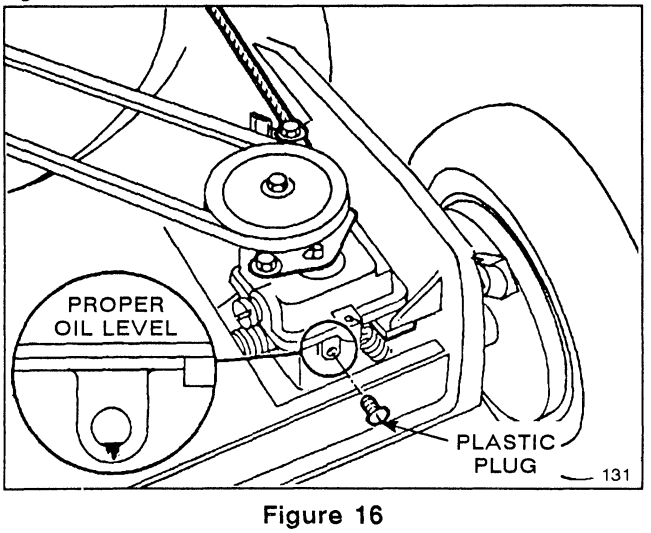

Figure 16

4. Reinstall transmission cover.

ADJUSTING WHEEL DRIVE CONTROL

If front wheels do not engage and disengage or if a new wheel drive control cable is installed, an adjustment is required.

1. Stop engine and pull wire off spark plug (Fig. 9).

2. Remove transmission cover (Fig. 15).

3. ADJUSTMENT (Fig. 17)—Loosen belt guide clamp until cable conduit slides. Move handle-mounted wheel drive control To DISENGAGE detent. Move shift arm toward clamp and hold in place. Pull cable conduit to remove slack and tighten belt guide clamp.

4. Reinstall transmission cover.

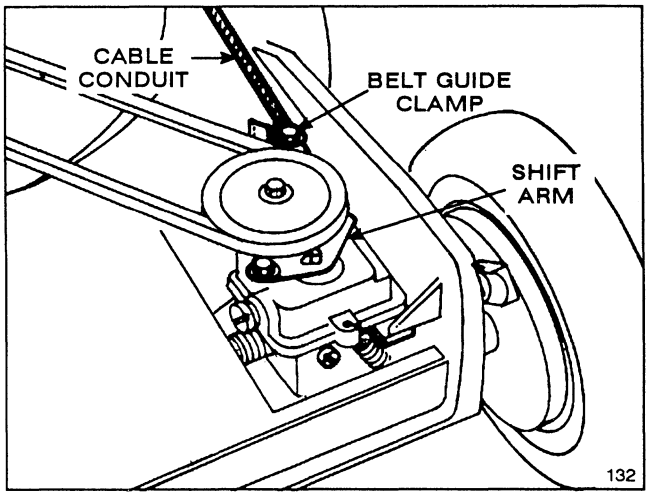

Figure 17

ADJUSTING BRAKE CABLE

Whenever a new blade brake cable assembly is installed, an adjustment is required.

1. Stop engine and pull wire off spark plug (Fig. 9).

2. CHECK ADJUSTMENT (Fig. 18)—Move control bar toward handle until slack in wire is removed. Gap between brake lever and handle must be 3/16"-1/4". See step 3 for adjustment.

3. ADJUST CABLE CONDUIT—Loosen nut on cable bracket (Fig. 18). Insert 3/16"-1/4" object between brake lever and handle. Pull down on cable conduit until slack is removed. Then tighten nut.

MAINTENANCE

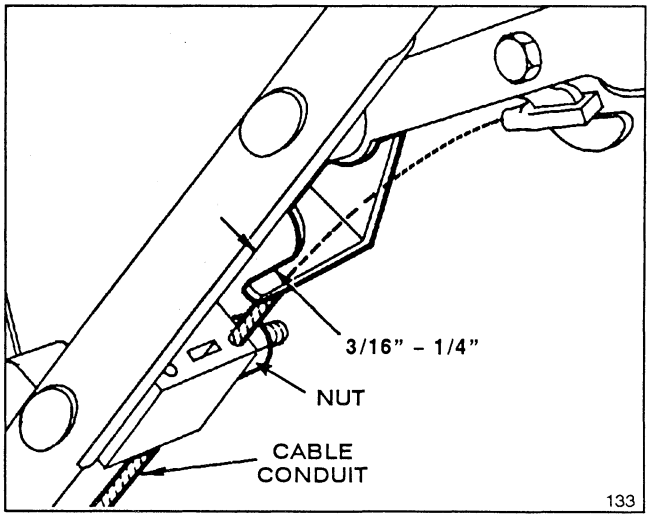

Figure 18

CLEANING MOWER HOUSING

To ensure best performance, keep underside of mower housing and inside of discharge area clean.

1. Drain gasoline from fuel tank: refer to Draining Gasoline, page 6.

2. Tip mower on its left side (Fig. 19). Avoid rotating blade because starting problems may result.

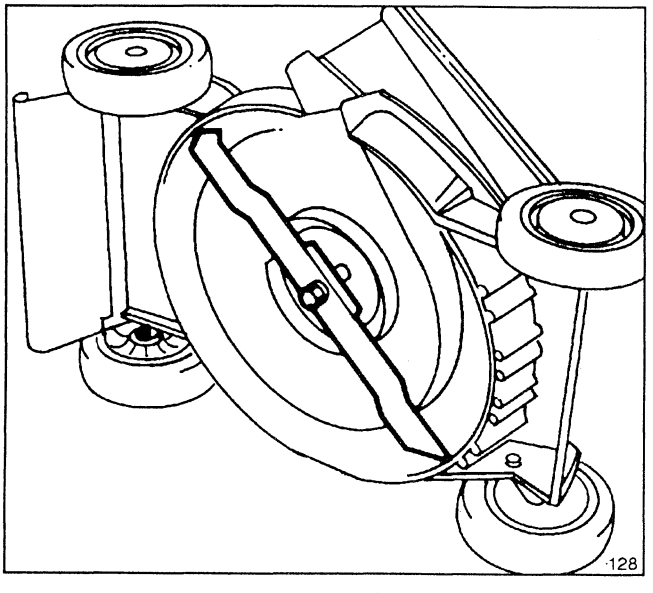

Figure 19

3. Remove dirt and grass clippings that stick to housing with a hardwood scraper. Avoid burrs and sharp edges.

PREPARING MOWER FOR STORAGE

1. For long term storage, either drain gasoline from fuel tank or add a fuel stabilizer to the gasoline. To drain gasoline, refer to Draining Gasoline, page 6. After fuel is drained, start engine and let it idle until all fuel is consumed and engine stops. Repeat the starting procedure two more times to ensure all gas is removed from the engine. If gasoline is not drained, gum-like varnish deposits will form and cause poor engine operation, even starting problems.

Fuel can be left in gas tank only if a fuel additive, such as Toro's Stabilizer/Conditioner, is added to gasoline and run through engine before storing. Toro's Stabilizer/Conditioner is a petroleum distillate based conditioner/stabilizer. Toro does not recommend stabilizers with an alcohol base, such as ethanol, methanol or isopropyl. Use fuel additive in recommended quantities as specified on container.

Under normal conditions, all fuel additives remain effective in fuel for 6-8 months.

2. Remove spark plug and pour 2 teaspoons of Toro two-cycle oil into hole in cylinder. Pull starter rope slowly to coat inside of cylinder. Install spark plug and tighten to 10 ft-lb (13.6 N·m). **DO NOT REINSTALL WIRE ON SPARK PLUG.**

3. Clean mower housing: refer to Cleaning Mower Housing, page 9.

4. Check condition of blade: refer to Inspecting/Removing/Sharpening Blade, page 6.

5. Tighten all nuts, bolts, and screws.

6. Clean dirt and chaff from cylinder, cylinder head fins, and blower housing. Also remove grass clippings, dirt, and grime from external parts of the engine, shrouding, and top of mower housing.

7. Clean air cleaner: refer to Servicing Air Cleaner, pages 6.

8. Lubricate the wheels: refer to Lubrication, page 7.

9. Check transmission oil: refer to Checking Transmission Oil Level, page 7.

10. Touch up all rusted or chipped paint surfaces. Toro Re-Kote paint is available from an Authorized TORO Service Dealer.

11. Store mower in a clean, dry place, out of the reach of children. Cover mower to keep it clean and protected.

OPTIONAL EQUIPMENT

For special conditions, the following accessories may be purchased at your local Authorized Toro Service Dealer.

1. Side Discharge Bagging Kit, Model No. 47-6510—Side bag kit (Fig. 20) lets you bag lush grass in spring to help keep your lawn free of clippings. In the fall, bag leaves while you mow to eliminate the hand-blistering raking job.

2. Spark Arrestor, Part No. 81-0200—If a spark arrestor is required because of local, state, or federal regulations, it may be purchased at your local Authorized TORO Service Dealer. If mower is operated on any California forest, brush, or grass covered land without a properly operating spark arrestor, the operator is violating state law, Section 4442 Public Resources Code.

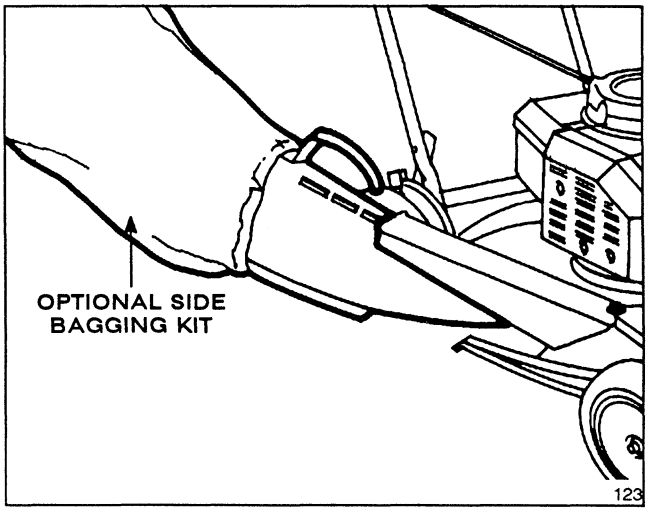

Figure 20

TORO SERVICE SUPPORT

If help - concerning safety, set-up, operation, maintenance, or troubleshooting - is ever needed, contact the local Authorized TORO Service Dealer or Distributor. Refer to the "Yellow Pages" for assistance. In addition to skilled service technicians, the dealer and distributor have factory approved accessories and replacement parts. Keep your Toro all TORO. Buy genuine TORO replacement parts and accessories.

PRODUCT IDENTIFICATION

A model and a serial number decal is located at rear of mower housing. Always refer to specific numbers on this decal in correspondence or when replacement parts are needed.

It is Toro's policy to design and produce high quality products. To ensure customer satisfaction, Toro has extensive warranty coverage on its products. Your TORO GTS Engine powered product has two warranty statements covering it. The Toro Promise is our standard warranty statement and is printed on the last page of this manual.

In addition to The Toro Promise, we are so confident that the TORO GTS Engine will provide a high level of performance and durability that we are providing a *Starting Guarantee!* Please read the details of this additional warranty coverage printed below.

THE TORO STARTING GUARANTEE

A Five Year Limited Warranty
On All Toro GTS Engines

What Is Covered?

The Toro Company guarantees that your TORO GTS Engine will start on the first or second pull for five years from the date of purchase—if you provide the routine maintenance it requires—or we will fix it. The cost of parts and labor are included, but you must pay transportation costs. This covers TORO GTS rotary mower engines purchased after September 1, 1988, and TORO GTS snow engines (Models 38180 and 38185) purchased after August 31, 1989.

What Must You Do To Keep The Warranty In Effect?

You must maintain your TORO GTS Engine by following the maintenance schedule detailed in the operator's manual, at your expense. You must record this work in the maintenance chart provided in your owner's manual and keep your proof of purchase.

How Do You Get Service?

If the starting performance of your TORO GTS Engine should diminish to the point where it will not start in one or two pulls by a normal, able-bodied adult, you should follow the procedures below:

1. Contact any Authorized TORO Service Dealer, TORO Master Service Dealer, or TORO Distributor (the Yellow Pages of your telephone directory is a good reference source).

2. He will either instruct you to return the product to him or recommend another Authorized TORO Service outlet which might be more convenient.

3. Bring the product, your maintenance records, and proof of purchase to the Service Dealer.

If, for any reason, you are dissatisfied with the Dealer's analysis of your engine's starting condition, or the assistance provided, please feel free to contact us:

TORO Customer Service Department
8111 Lyndale Avenue South
Minneapolis, Minnesota 55420

What Does This Warranty Not Cover?

This Warranty does not cover:

1. Any repairs on products used commercially.
2. Normal maintenance including replacement of spark plugs, air filter, fuel filter, and carburetor adjustments.
3. Oil change and lubrication.
4. Repairs or adjustments due to:
   a. Failure to follow proper maintenance procedures;
   b. Rotary mower blade striking an object;
   c. Contaminants in the fuel system;
   d. Improper fuel or fuel mixture (consult your owner's manual if in doubt);
   e. Failure to drain the fuel system prior to any period of non-use over three months;
   f. Operation misuse, neglect or accidents;
   g. Repairs or attempted repairs by anyone other than an Authorized TORO Service Dealer.
5. Special operational conditions where starting may require more than two pulls, including:
   a. First time starts after extended period of non-use or seasonal storage;
   b. Cool temperature starts such as those found in early spring and late fall may require an additional pull or two (applies to rotary products only);
   c. Improper starting procedures. If you are having difficulty starting your unit, please check the operator's manual to ensure you are using the correct starting procedures. This can save an unnecessary visit to a Service Dealer.

All warranty repairs reimbursable under this warranty must be performed by an Authorized TORO Service Dealer using Toro approved replacement parts.
The above remedy through repair by an Authorized TORO Service Dealer is the purchaser's sole remedy.

How Does State Law Relate To This Warranty?

There is no other express warranty except for The Toro Promise. All implied warranties of merchantability (that the product is fit for ordinary use) and fitness for use (that the product is fit for a particular purpose) are limited to the duration of the express warranty.

Some states do not allow limitation on how long implied warranties last, so the above exclusion may not apply to you.

The Toro Company is not liable for indirect, incidental or consequential damages in connection with the use of the product, including any cost or expense of providing substitute equipment or service during periods of malfunction or non-use.

Some states do not allow exclusions of incidental or consequential damages, so the above exclusion may not apply to you.

This warranty gives you specific legal rights, and you may also have other rights which vary from state to state.

GUARANTEED TO START MAINTENANCE RECORD

To keep the starting guarantee in effect, you must perform the following maintenance after every 25 operating hours, more often in dusty and dirty conditions. Follow the procedures in this Operator's Manual and record information on this chart.

Date	Hours Used	Air Cleaner Service	Change Oil Doesn't Apply to 2-Cycle	Lubricate Wheels	Check Spark Plug	Mower Storage

GUARANTEED TO START MAINTENANCE RECORD

To keep the starting guarantee in effect, you must perform the following maintenance after every 25 operating hours, more often in dusty and dirty conditions. Follow the procedures in this Operator's Manual and record information on this chart.

Date	Hours Used	Air Cleaner Service	Change Oil Doesn't Apply to 2-Cycle	Lubricate Wheels	Check Spark Plug	Mower Storage


TORO®

The Toro Promise

A Two Year Limited Warranty
On All
Gasoline Powered Consumer Products

The Toro Company promises to repair these TORO Products if defective in materials or workmanship. The following time periods from the date of purchase apply:

Residential Product	2 Years
Residential Products Used Commercially	45 Days
Straight Shaft Trimmers, 3 H.P. Edger, Back Pack Blowers, 5 H.P. Lawn Vac, 5 H.P. Blower Used Commercially	90 Days

The cost of parts and labor are included, but the customer pays the transportation costs. Just return any residential product to an Authorized TORO Service Dealer or TORO Distributor.

Should you feel your TORO Product is defective and wish to rely on The Toro Promise, the following procedure is recommended:

1. Contact any Authorized TORO Service Dealer, TORO Master Service Dealer, or TORO Distributor (the Yellow Pages of your telephone directory is a good reference source).
2. He will either instruct you to return the product to him or recommend another Authorized TORO Service outlet which might be more convenient.
3. Bring the product along with your original sales slip, or other evidence of purchase date, to the service dealer.
4. The servicing dealer will inspect the unit, advise you whether the product is defective and, if so, make all repairs necessary to correct the defect without extra charge to you.

If for any reason you are dissatisfied with the analysis of the defect or the service performed, you may contact us.

Write: TORO Customer Service Dept.
8111 Lyndale Avenue South
Minneapolis, MN 55420

The above remedy of product defects through repair by an Authorized TORO Service Dealer is the purchaser's sole remedy for any defect.

THERE IS NO OTHER EXPRESS WARRANTY EXCEPT FOR THE TORO STARTING GUARANTEE ON GTS ENGINES. ALL IMPLIED WARRANTIES OF MERCHANTIBILITY AND FITNESS FOR USE ARE LIMITED TO THE DURATION OF THE EXPRESS WARRANTY.

Some states do not allow limitations on how long implied warranty lasts, so the above limitation may not apply to you.

This Warranty applies only to parts or components which are defective and does not cover repairs necessary due to normal wear, misuse, accidents, or lack of proper maintenance. Regular, routine maintenance of the unit to keep it in proper operating condition is the responsibility of the owner.

All warranty repairs reimbursable under The Toro Promise must be performed by an Authorized Toro Service Dealer using Toro approved replacement parts.

Repairs or attempted repairs by anyone other than an Authorized TORO Service Dealer are not reimbursable under the TORO Promise. In addition, these unauthorized repair attempts may result in additional malfunctions, the correction of which is not covered by warranty.

THE TORO COMPANY IS NOT LIABLE FOR INDIRECT OR CONSEQUENTIAL DAMAGES IN CONNECTION WITH THE USE OF THE PRODUCT INCLUDING ANY COST OR EXPENSE OF PROVIDING SUBSTITUTE EQUIPMENT OR SERVICE DURING PERIODS OF MALFUNCTION OR NON-USE.

Some states do not allow the exclusion of incidental or consequential damages, so the above exclusion may not apply to you.

This warranty gives you specific legal rights, and you may also have other rights which vary from state to state.

COUNTRIES OTHER THAN THE UNITED STATES OR CANADA

Customers who have purchased TORO products exported from the United States or Canada should contact their TORO Distributor (Dealer) to obtain guarantee policies for your country, province, or state. If for any reason you are dissatisfied with your Distributor's service or have difficulty obtaining guarantee information, contact the TORO importer. If all other remedies fail, you may contact us at The Toro Company.