FORM NO. 3314-589 Rev. B

TORO®

MODEL NO. 30564 — 10001 THRU 30001 & UP

OPERATOR'S MANUAL

62" SIDE DISCHARGE CUTTING UNIT

TORO®
THIS UNIT CONFORMS TO ANSI B71.4 - 1984

To assure maximum safety, optimum performance, and to gain knowledge of the product, it is essential that you or any other operator of the mower read and understand the contents of this manual before the engine is ever started. Pay particular attention to the SAFETY INSTRUCTIONS highlighted by this symbol —



The safety alert symbol means CAUTION, WARNING or DANGER — personal safety instruction. Failure to comply with the instruction may result in personal injury.



FOREWORD

The cutting unit has advanced concepts in engineering, design and safety; and if maintained properly, will give excellent service.

Since it is a high-quality product, Toro is concerned about the future use of the machine and safety of the user. Therefore, read this manual to familiarize yourself with proper set-up, operation and maintenance instructions. The major sections of the manual are:

1. Safety Instructions
2. Set-up Instructions
3. Before Operating
4. Lubrication
5. Maintenance

Certain information in this manual is emphasized. DANGER, WARNING and CAUTION identify personal safety-related information. IMPORTANT identifies mechanical information demanding special attention. Be sure to read this directive because it deals with the possibility of damaging a part of the machine. NOTE identifies general information worthy of special attention.

TABLE OF CONTENTS

	Page
SAFETY INSTRUCTIONS	2-4
SAFETY AND INSTRUCTION DECALS	4
SPECIFICATIONS	5
LOOSE PARTS	5
SET-UP INSTRUCTIONS	6-8
Install Cutting Unit Suspension Frame	6
Install Cutting Unit	6
Install Weight Transfer Kit	7
Mount Rear Weights	9
BEFORE OPERATING	9
Adjusting Height-of-Cut	9
Adjusting Skid	10
Check Lubricant in Gear Box	10
OPERATING INSTRUCTIONS	10
Grass Deflector	10
Tension Spring Adjustment	10
LUBRICATION MAINTENANCE	11
CUTTING UNIT MAINTENANCE	12-20
Troubleshooting	12
Separating Cutting Unit From Traction Unit	13
PTO Shaft Removal	13
Servicing Bushings in Castor Arms	13
Servicing Castor Wheel and Bearing	14
Checking for Bent Blade	14
Replacing Cutter Blade	15
Checking Sail and Sharpening Cutter Blade	15
Correcting Cutting Unit Mismatch	16
Replacing Grass Deflector	17
Adjusting Idler Pulley	18
Adjusting Cover Latches	18
Replacing Drive Belt	18
Replacing Idler Pulley and Arm	19
Replacing Idler Plate	19
Replacing Spindle Pulley	19
IDENTIFICATION AND ORDERING	20
SERVICE INTERVAL CHART	21-23
THE TORO PROMISE	Back Cover

SAFETY INSTRUCTIONS



This safety alert symbol means CAUTION, WARNING or DANGER — "personal safety instruction". Read and understand the instruction because it has to do with safety. Failure to comply with the instruction may result in personal injury.

The cutting unit has been tested and certified for compliance with the B71.4-1984 specifications of the American National Standards Institute. Although hazard control and accident prevention partially are dependent upon the design and configuration of the machine, these factors are also dependent upon the awareness, concern, and proper training of the personnel involved in the operation, transport, maintenance, and storage of the machine. Improper use or maintenance of the machine can result in injury or death. To reduce the potential for injury or death, comply with the following safety instructions.

BEFORE OPERATING

1. Read and understand the contents of this Operator's Manual before operating the machine. Become familiar with all controls and know how to stop quickly. A free replacement manual is available by sending complete Model and Serial Number to:

   The Toro Company
   8111 Lyndale Avenue South
   Minneapolis, Minnesota 55420

2. Never allow children to operate the machine. Do not allow adults to operate the machine without proper instruction. Only trained operators who have read this manual should operate this machine.

3. Never operate the machine when under the influence of drugs or alcohol.

4. Remove all debris or other objects that might be picked up and thrown by the cutter blades. Keep all bystanders away from the mowing area.

5. Keep all shields and safety devices in place. If a shield, safety device or decal is defective or

COPYRIGHT © ALL RIGHTS RESERVED
©The Toro Company — 1991, Rev. 1992

MINNEAPOLIS, MN 55420 - U.S.A.

damaged, repair or replace it before operation is commenced. Also tighten any loose nuts, bolts and screws to assure machine is in safe operating condition.

6. Do not operate machine while wearing sandals, tennis shoes, sneakers or shorts. Also, do not wear loose fitting clothing which could get caught in moving parts. Always wear long pants and substantial shoes. Wearing safety glasses, safety shoes and a helmet is advisable and required by some local ordinances and insurance regulations.

7. Check interlock switches daily for proper operation (Refer To Section in Traction Unit Operator's Manual on Checking Interlock Switches). Do not rely entirely on safety switches — shut off engine before getting off seat. If a switch fails, replace it before operating the machine. The interlock system is for your protection, so do not bypass it. Replace all interlock switches every two years. Interlock switches should be adjusted so:

A. Engine cannot be started unless traction pedal is released (neutral position) and PTO lever is DISENGAGED (off position).

B. Engine stops if operator gets off seat when traction pedal is depressed.

C. Engine stops if operator gets off seat when PTO lever is ENGAGED (on position).

8. Fill fuel tank with gasoline before starting the engine. Avoid spilling gasoline. Since gasoline is flammable, handle it carefully.

A. Use an approved gasoline container.

B. Do not fill tank while engine is hot or running.

C. Do not smoke while handling gasoline.

D. Fill fuel tank outdoors and up to about one inch (25 mm) from top of the tank, not the filler neck.

E. Wipe up any spilled gasoline.

WHILE OPERATING

9. Do not run the engine in a confined area without adequate ventilation. Exhaust fumes are hazardous and could possibly be deadly.

10. Maximum seating capacity is one person. Never carry passengers.

11. Sit on the seat when starting the engine and operating the machine.

12. Before starting the engine:

A. Engage parking brake.

B. Ensure traction pedal is in neutral and PTO is in OFF, disengage position.

C. After engine is started, release parking brake and keep foot off traction pedal. Machine must not move. If movement is evident, the neutral return mechanism is adjusted incorrectly; therefore, shut engine off and adjust until machine does not move when traction pedal is released.

13. Using the machine demands attention, and to prevent loss of control:

A. Mow only in daylight or when there is good artificial light.

B. Watch for holes or other hidden hazards.

C. Do not drive close to a sand trap, ditch, creek or other hazard.

D. Reduce speed when making sharp turns and when turning on hillsides.

E. Avoid sudden stops and starts.

F. Before backing up, look to the rear and be sure no one is behind the machine.

G. Watch for traffic when near or crossing roads. Always yield the right-of-way.

14. The grass deflector must always be installed and in down position on the side discharge cutting unit. If the cutting unit discharge area ever plugs, disengage PTO and shut engine off before removing the obstruction. This product is designed to drive objects into the ground where they lose energy quickly in grassy areas. However, don't take an injury risk! When a person or pet appears unexpectedly in or near the mowing area, STOP MOWING. Careless operation, combined with terrain angles, ricochets, or improperly positioned guards, can lead to thrown object injuries. Do not resume mowing until area is cleared.

15. Never raise the cutting unit while the blades are rotating.

16. If the cutting blades strike a solid object or the machine vibrates abnormally, disengage PTO, move throttle to SLOW, set parking brake and shut engine off. Remove key from switch to prevent possibility of accidental starting. Check cutting unit and traction unit for damage and defective parts. Repair any damage before restarting the engine and operating the cutting unit. Be sure blades are in good condition and blade bolts are tight.

17. Cut grass slopes carefully. Do not start, stop, or turn suddenly.

18. Do not touch engine or muffler while engine is running or soon after it is stopped. These areas could be hot enough to cause a burn.

19. Before getting off the seat:

A. Move traction pedal to neutral position and remove foot from pedal.

B. Set the parking brake and disengage the PTO.

C. Shut the engine off and remove key from ignition switch. Wait for all movement to stop before getting off the seat.

SAFETY INSTRUCTIONS

20. Lower the cutting unit to the ground and remove key from ignition switch whenever machine is left unattended.

MAINTENANCE

21. Remove key from ignition switch to prevent accidental starting of the engine when servicing, adjusting or storing the machine.

22. Perform only those maintenance instructions described in this manual. If major repairs are ever needed or assistance is desired, contact an Authorized Toro Distributor.

23. To reduce potential fire hazard, keep the engine free of excessive grease, grass, leaves and accumulations of dirt.

24. Be sure machine is in safe operating condition by keeping nuts, bolts and screws tight. Check the blade mounting bolts frequently to be sure they are tight.

25. Make sure all hydraulic line connectors are tight, and all hydraulic hoses and lines are in good condition before applying pressure to the system.

26. Keep body and hands away from pin hole leaks or nozzles that eject hydraulic fluid under high pressure. Use paper or cardboard, not hands, to search for leaks. Hydraulic fluid escaping under pressure can have sufficient force to penetrate skin and do serious damage. If fluid is ejected into the skin it must be surgically removed within a few hours by a doctor familiar with this form of injury or gangrene may result.

27. Before disconnecting or performing any work on the hydraulic system, all pressure in system must be relieved by stopping engine and lowering implement to the ground.

28. If the engine must be running to perform a maintenance adjustment, keep hands, feet, clothing and other parts of the body away from the cutting unit blades and other moving parts.

29. Do not overspeed the engine by changing governor settings. To be sure of safety and accuracy, have an Authorized TORO Distributor check maximum engine speed with a tachometer.

30. Engine must be shut off before checking oil or adding oil to the crankcase.

31. At the time of manufacture the cutting unit conformed to safety standards in effect for riding mowers. Therefore, to ensure optimum performance and safety, always purchase genuine TORO replacement parts and accessories to keep the Toro all TORO. NEVER USE "WILL-FIT" REPLACEMENT PARTS AND ACCESSORIES MADE BY OTHER MANUFACTURERS. Look for the TORO logo to assure genuineness. Using unapproved replacement parts and accessories could void the warranty of The Toro Company.



SAFETY AND INSTRUCTION DECALS

The following decals are installed on the machine. If any become damaged or illegible, replace it. The decal part number is listed in your parts catalog. Replacement can be ordered from your Authorized Toro Distributor.



ON LEFT SIDE OF CUTTING UNIT
(Part No. 68-7270)



UNDER DEFLECTOR
(Part No. 66-6380)

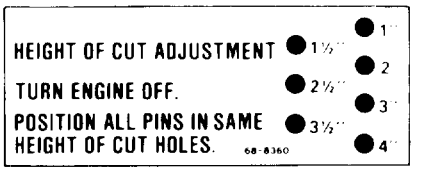

ON LEFT SIDE OF CARRIER FRAME
(Part No. 68-8360)



ON LEFT SIDE OF CUTTING UNIT AND DEFLECTOR
(Part No. 43-8480)

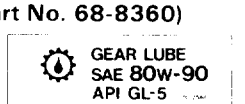

ON GEAR BOX BRACKET
(Part No. 70-2560)

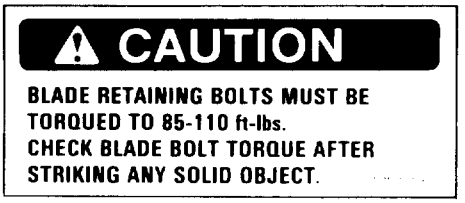

ON LEFT SIDE OF CUTTING UNIT
(Part No. 68-8340)



ON LEFT, CENTER AND RIGHT SIDES OF DECK, UNDER COVERS
(Part No. 67-5360)



ON RIGHT AND LEFT OF CUTTING UNIT
(Part No. 66-1340)

SPECIFICATIONS

CUTTING UNIT:

Width of Cut: 61 5/8 in. (1.56 m).

Height-of-Cut: Adjustable from 1" to 4" (25 to 102 mm) in 1/2" increments.

Blade Tip Speed: 264 ft/sec @ 3250 engine RPM.

Cutter Blades: Three heat treated steel blades, each 3/16 in. (4.8 mm) thick and 21 1/2 in. (55 mm) long.

Pneumatic Wheels: 8 in. (203 mm) dia. with grease-able roller bearings. (Inflation 20-30 P.S.I.).

Unit Drive System: PTO driven gear box transmits power through a "AA" section belt to all blade spindles.

Specifications and design subject to change without notice.

Optional Equipment:

Deluxe Weight Transfer Kit: Model 30703.

Note: On Models 30790 or 30798 also order Adapter Bar, Part No. 66-8210.

62" Front Baffle Kit: Part No. 82-8800 (For Dry Conditions)

Leaf Mulcher: Model 30792

Grass Collection System: Model 30503 Blower Kit used with Model 30504 Hopper Kit or Model 30505 Dump Kit.

Note: Model 30505 only fits Models 30223, 30794 & 30224.

Phenolic Castor Wheels: Part No. 27-1050 use with Spanner Part No. 69-8980 or order Part No. 40-0370 Castor Fork and 3/4" bolts Part No. 328-9.

LOOSE PARTS

Note: Use this chart as a checklist to assure all parts have been received. Without these parts, total set-up cannot be completed.

DESCRIPTION	QTY.	USE
Rear Cradle	2	
Capscrew 3/8 - 16 x 1-3/4"	6	
Flange Nut 3/8 - 16	6	
Capscrews — 1/2-13 x 1-1/2"	6	} Mount to lift arms.
Carrier Frame	1	
Castor Wheel Assembly	2	Install in frame.
Thrust Washer	8	Install on castor fork shafts.
Lynch Pin	2	Install in top hole of castor shafts.
Clevis Pin	4	} Mount deck to Suspension Frame.
Hair Pin Cotter	4	
Mounting Bracket	2	
Lock Pin Assembly	4	
Self-tapping Screw	4	
Spring Cover Assembly	4	
Clevis Pin	2	
Hair Pin Cotter	2	
Spring End — Top	2	
Extension Spring — Heavy (L.H. Side)	1	Mount Weight Transfer Kit to traction unit.
Extension Spring — Light (R.H. Side)	1	**Note:** On Models 30790 or 30798 also order
Spring End — Lower	2	Adapter Bar, Part No. 66-8210.
Knee Link	2	
Capscrew, 3/8 — 16 x 2-1/4"	4	
Capscrew, 3/8 — 16 x 1.0"	4	
Shoulder Bolt	4	
Flatwasher	4	
Locknut, 3/8 — 16	12	
Operator's Manual	1	
Registration Card	1	
Cushion Shim	3	Leveling rubber cushions on cutting deck.

Note: The following parts are also required for mounting a Model 30564 (62") Cutting Unit

Part No.	Description	Qty.	Part No.	Description	Qty.
24-5790	Rear Weight	1	3217-9	Nut 1-2	2
325-8	Capscrew 1-2 13x2"	2		OR	
3253-7	Lockwasher 1-2	2	*24-5780	Rear Weight Kit	1
3-8847	Spacer	2		(Includes two weights)	

*Use minimum of one weight from kit. Order parts from your Authorized Toro Distributor.

SET-UP INSTRUCTIONS

DANGER

Do not start the engine and engage the PTO lever when PTO shaft is not connected to cutting unit gear box because the PTO shaft will rotate with enough force to cause serious injury.

INSTALL CUTTING UNIT SUSPENSION FRAME

Note: Grease castor wheel shaft with No. 2 grease after installing and after initial operation of machine.

1. Remove Lynch Pins and two thrust washers shipped on each castor wheel assembly. Leave two thrust washers on each shaft, insert shafts into frame, install thrust washers and Lynch pins (Fig. 1).

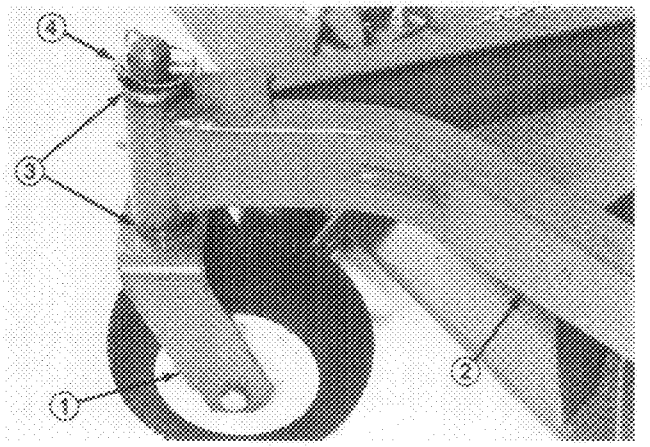

Figure 1

1. Castor wheel assembly *3. Thrust washers*
2. Frame *4. Lynch pin*

2. Mount a rear cradle to each lift arm with (3) 3/8 - 16 x 1-3/4" capscrews and flange nuts as shown in Figure 2. Torque fasteners to 20-25 ft-lb.

Note: If rear cradle mounting holes are not in lift arms, use the dimensions shown in Figure 3, to locate, mark and drill the (3) .406" dia. holes required in each lift arm.

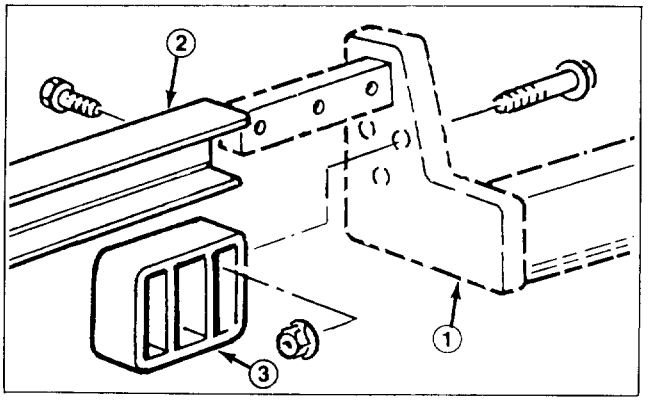

Figure 2

1. Lift arm *2. Carrier frame* *3. Rear cradle*

3. Slide carrier frame onto lift arms aligning mounting holes. Secure each side of carrier frame to lift arms with (3) 1/2 - 13 x 1-1/2" lg. capscrews. Torque capscrews to 70-80 ft-lb. (Fig. 2).

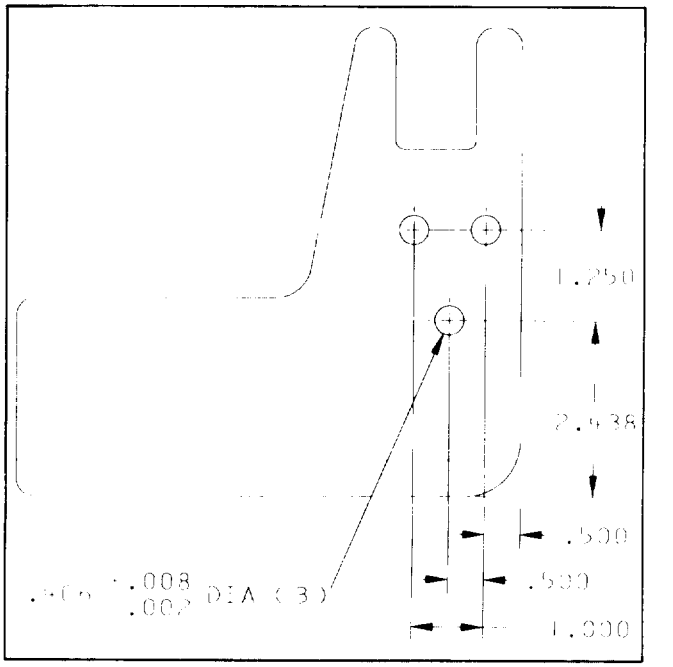

Figure 3

INSTALL CUTTING UNIT

1. Make sure PTO shaft on traction unit clears cutting unit frame, engage parking brake, be sure traction pedal is in neutral, PTO lever is in OFF position, start engine and raise frame.

2. Stop engine, slide cutting unit under frame, slide male PTO shaft into female PTO shaft. Align gearcase input shaft with PTO shaft and slide together. Secure with roll pin (Fig. 4).

Note: On Groundsmaster 223-D (Diesel) or GM 224 also tighten bolts and locknuts (Fig. 4).

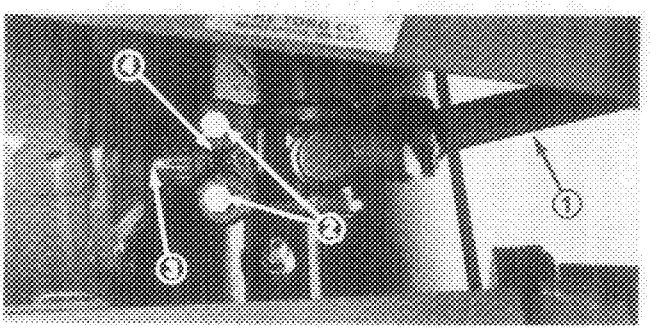

Figure 4

1. PTO shaft *3. Gearcase shaft*
2. Bolts and locknuts *4. Roll pin*

3. Install clevis pins through desired height-of-cut bracket holes and frame to secure cutting unit to frame (Fig. 8). Secure all four pins with hairpins.

SET-UP INSTRUCTIONS

4. Grease all lubricating fittings and check level of oil in gearcase; refer to Lubrication Maintenance, page 11.

INSTALL WEIGHT TRANSFER KIT

Note: Fully raise the cutting deck, set the parking brake, rotate the ignition key to OFF and remove it from the ignition switch. Place blocks under the cutting deck to prevent it from falling during assembly.

Note: Mounting brackets must be installed in different configurations (Fig. 5) and, depending on the cutter deck, in different locations on 220-D, 223D, and 224 models than on model machines (Fig. 6, 7).

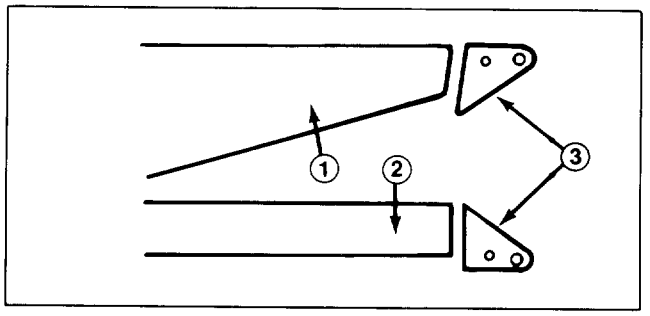

Figure 5

1. 223-D, 224 traction unit frame 2. 220 traction unit frame 3. Mounting bracket

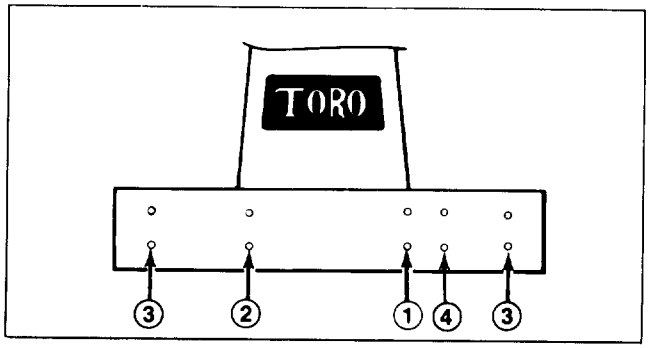

GM 223-D & GM 224

Figure 6

1. 52" side discharge deck 3. 62" & 72" decks
2. 52" deck w/bagger 4. 52" rear discharge deck

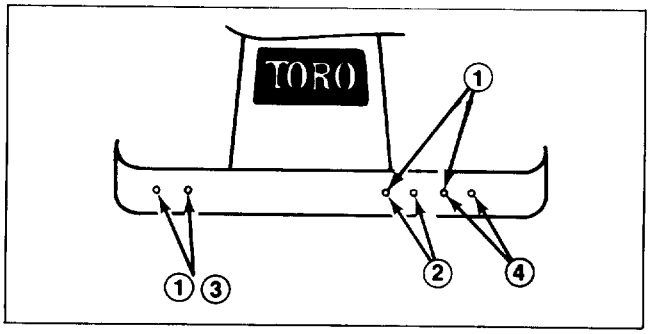

GM 220

Figure 7

1. Adapter bar mount holes (62", 72" C.U.)
2. 52" side discharge deck
3. 52" side discharge w/bagger
4. 52" rear discharge deck

1. To install the mounting bracket:

A. Groundsmaster 223-D and 224 — Insert (2) 3/8 x 1" flange screws through the slotted bracket holes. Thread the screws into captivated frame nuts and torque to 45-50 ft-lb (Fig. 8).

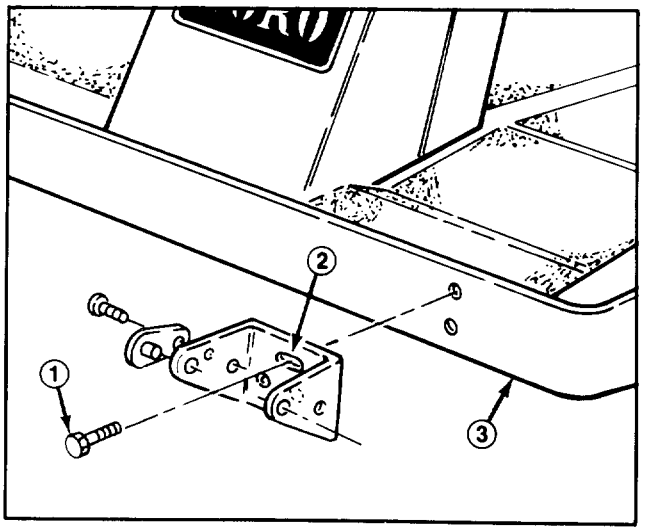

Figure 8

1. 3/8 x 1" flange screw (2) 2. Slotted hole 3. GM 223-D/224

B. Groundsmaster 217-D and 220 — Align the bracket with the frame mounting holes. Insert (2) 3/8 x 2-1/4" capscrews through the non-slotted bracket holes and frame mounting holes. Install locknuts and torque to 45-50 ft-lb (Fig. 9).

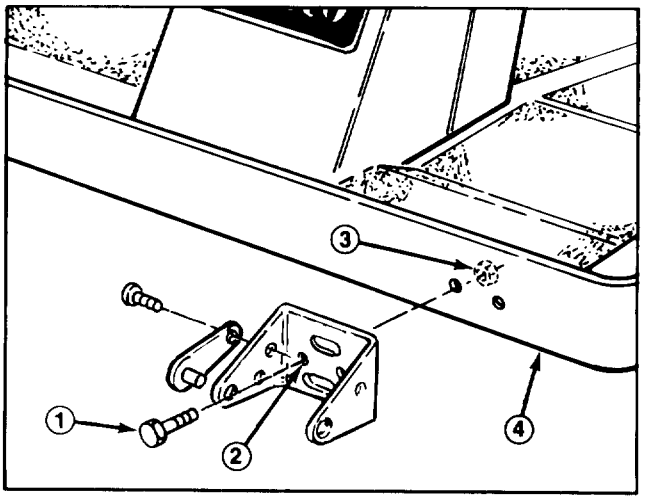

Figure 9

1. 3/8 x 2-1/4" capscrew (2)
2. Round hole
3. Locknut
4. GM 220/217-D

2. Thread the top extension spring coil into the top spring end holes and the bottom extension spring coil into the bottom spring end holes (Fig. 10).

SET-UP INSTRUCTIONS

3. Mount knee link to lower spring end with wide part of knee link pointing forward and spring end stop pointing forward. Secure knee link to outer side of spring end with a shoulder bolt and locknut (Fig. 10, 11).

IMPORTANT: The knee link must be assembled pointing in the proper direction or spring will not pivot correctly when deck is raised.

4. Mount bottom of knee link to deck bracket with a shoulder bolt and locknut. Use the heavy rate extension spring on the left hand side (large diameter spring wire) and the light rate extension spring on the right (small diameter spring wire).

5. Align slotted holes in the spring cover (slot toward the bottom) with the mounting bracket holes. Insert lock pin assemblies into the bracket holes and secure each to the bracket with self-tapping screws (Fig. 10). Torque the screws to 20 ft-lb.

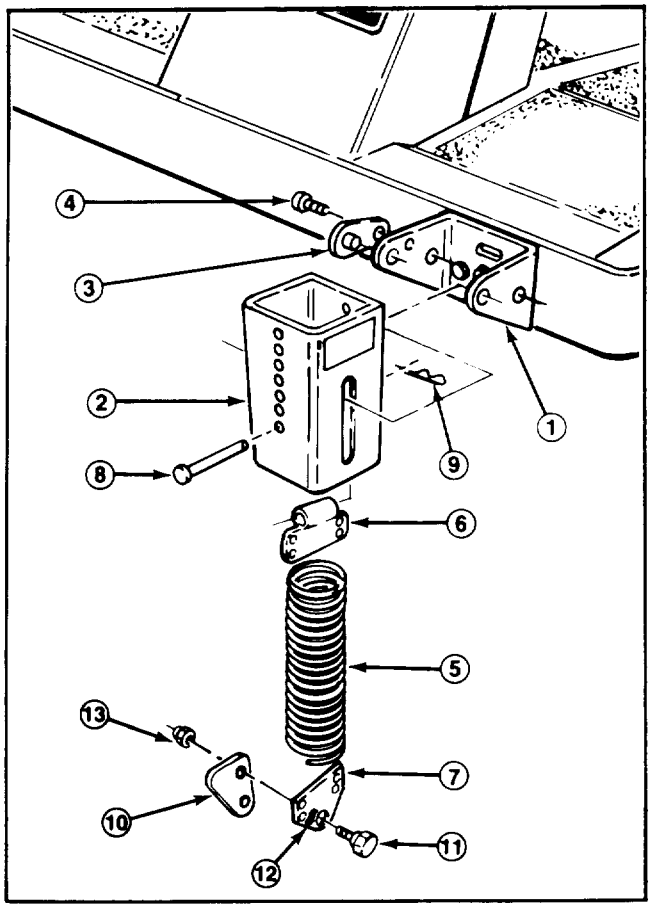

Figure 10

1. Mounting bracket
2. Spring cover
3. Lock pin assembly (2)
4. Self-tapping screw (2)
5. Extension spring
6. Top spring end
7. Bottom spring end
8. Clevis pin
9. Hair pin cotter
10. Knee link
11. Shoulder bolt (2)
12. Spring end stop
13. Locknut (2)

6. From the bottom, insert the spring and top spring end into the spring covers. Select a hole that matches the cutter deck height-of-cut hole setting; i.e., top cover hole matches highest height setting, bottom cover hole the lowest, etc. Align the top spring end hole with the selected spring cover holes and insert the clevis pin to secure the spring inside the cover (Fig. 10). Secure the clevis pin with the hair pin cotter (Fig. 10).

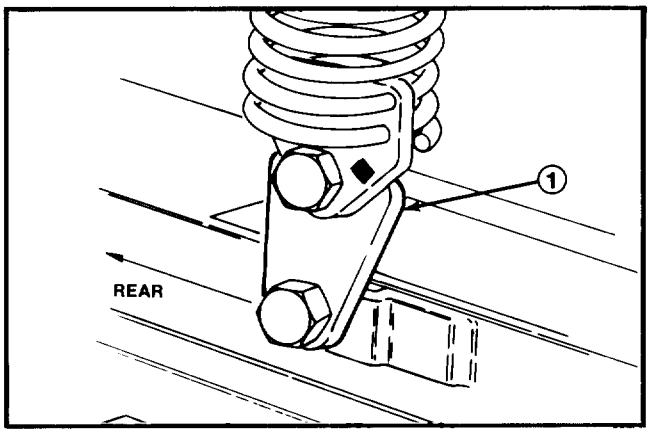

Figure 11

1. Wide part of knee link

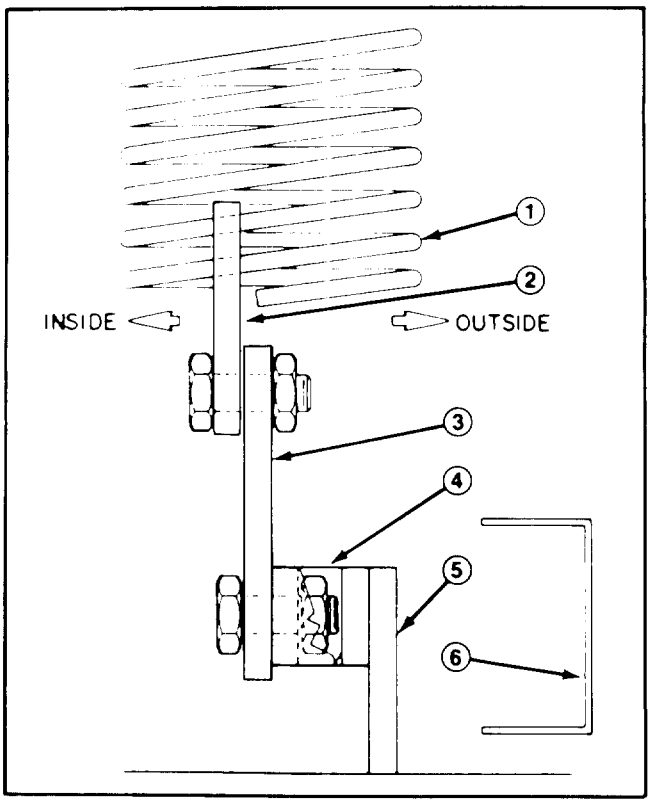

Figure 12

1. Weight transfer spring
2. Spring end plate
3. Knee link bracket
4. Deck Bracket
5. Deck frame
6. Flotation frame

7. Remove the blocks from under the cutting unit. Make final counterbalance adjustments under actual cutting conditions; refer to Tension Spring Adjustment, page 10.

SET-UP INSTRUCTIONS

MOUNT REAR WEIGHTS

CAUTION

To insure proper handling and safety characteristics, one 35 lb rear weight must be attached to Groundsmaster traction units.

1. Mount rear weights to back of machine with two capscrews, lockwashers, spacers, and nuts (Fig. 13). Spacer must be between weight and chassis. Order kit #24-5780 (includes 2-weights and hardware) from your Authorized Toro Distributor.

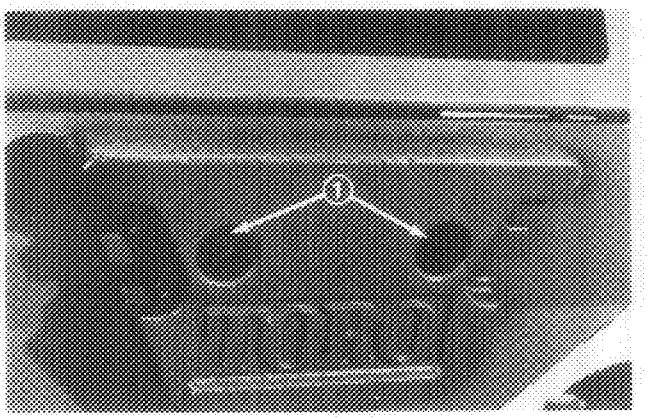

Figure 13

1. Capscrews, lock washers, spacers and nuts

BEFORE OPERATING

ADJUSTING HEIGHT-OF-CUT

The height-of-cut is adjustable from 1 to 4 inches (25 to 102 mm) in 1/2 inch (13 mm) increments by relocating four clevis pins in different hole locations in brackets at each corner of the cutting unit (Fig. 14).

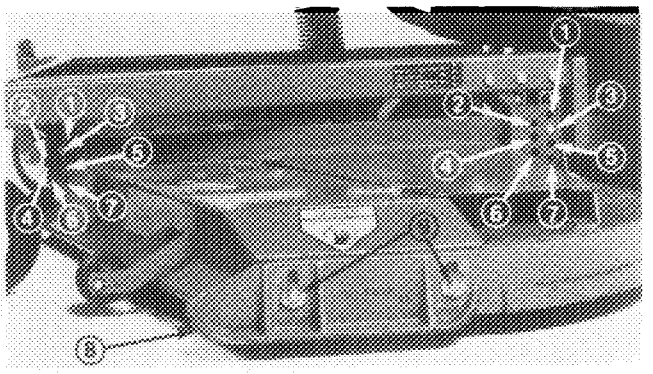

Figure 14

1. 1 in. (25 mm)
2. 1-1/2 in. (38 mm)
3. 2 in. (51 mm)
4. 2-1/2 in. (64 mm)
5. 3 in. (76 mm)
6. 3-1/2 in. (89 mm)
7. 4 in. (102 mm)
8. Skid
9. Flange nuts (2)

Note: All four pins should be in identical hole locations for proper operation.

Note: If cutting unit is to be used in 1 in. (25 mm) or 1-1/2 in. (38 mm) height-of-cut setting, rear cutting unit rollers must be positioned in the appropriate bracket holes (Fig. 15 & 16).

1. Remove nuts securing rear rollers to outside of cutting unit (Fig. 15).



Figure 15

1. Rear cutting unit roller

2. Position roller bracket in bottom mounting holes and reinstall nuts.

Note: Make sure L-shaped pin is inserted into roller shaft and hole in mounting bracket.

3. Remove cotter pins securing roller shafts to underside of deck (Fig. 16).

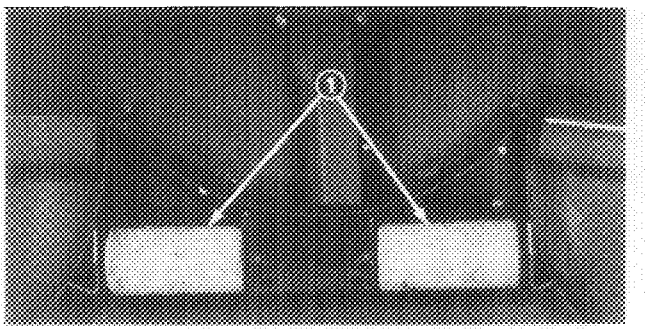

Figure 16

1. Rear cutting unit rollers

4. Slide shafts out of lower bracket holes, align rollers with top holes and install shafts.

5. Install cotter pins to secure assemblies.

BEFORE OPERATING

ADJUSTING SKID

1. After initial set up or if height-of-cut is changed, deck skid should also be adjusted.

1" H.O.C. — Skid all the way up
1-1/2" - 2" H.O.C. — Skid 1/4-3/8" off ground
2-1/2" and higher H.O.C. — Skid all the way down

2. Adjust skid by loosening flangenuts, positioning skid as desired, and retightening flangenuts (Fig.14).

CHECK LUBRICANT IN GEAR BOX

The gearbox is designed to operate on SAE 80-90 wt. gear lube. Although the gear box is shipped with lubricant from the factory, check the level before operating the cutting unit.

1. Position machine and cutting unit on a level surface. Lower cutting unit onto level surface.

2. Remove check plug from side of gear box (Fig. 17) and make sure lubricant is up to bottom of hole. If level of lubricant is low, remove fill plug on top of gear case and add enough lubricant to bring it up to bottom of hole in side.

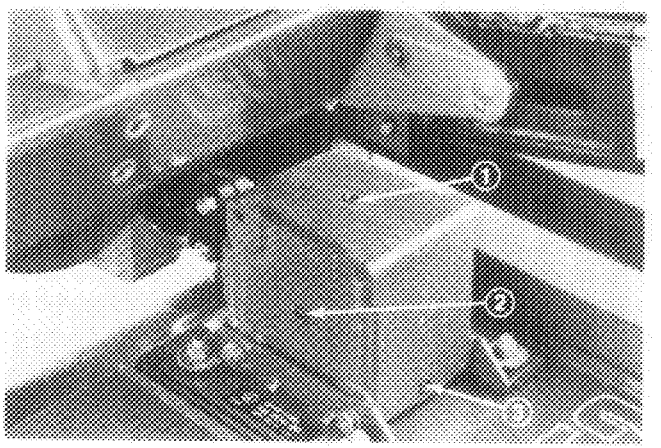

Figure 17

1. Filler plug 2. Check plug 3. Drain plug

OPERATING INSTRUCTIONS

GRASS DEFLECTOR

WARNING

The grass deflector (Fig. 18) is a safety device that diverts grass and other foreign objects being discharged downwardly. WE STRONGLY RECOMMEND THAT THE DEFLECTOR BE IN ITS NORMAL OPERATING POSITION WHENEVER THE CUTTING UNIT IS ENGAGED. NEVER OPERATE CUTTING UNIT WITH THE DEFLECTOR REMOVED FROM THE CUTTING UNIT OR TIED/BLOCKED IN A RAISED POSITION. SINCE THE BLADES COULD THEN THROW DEBRIS A CONSIDERABLE DISTANCE WITH SUFFICIENT FORCE TO CAUSE PERSONAL INJURY OR DAMAGE TO PROPERTY. If the grass deflector is damaged, repair or replace the affected part(s).

NOTE: The deflector is spring loaded into its downward normal operating position, but the operator can temporarily swing it out of the way to facilitate loading in a trailer or when otherwise necessary.

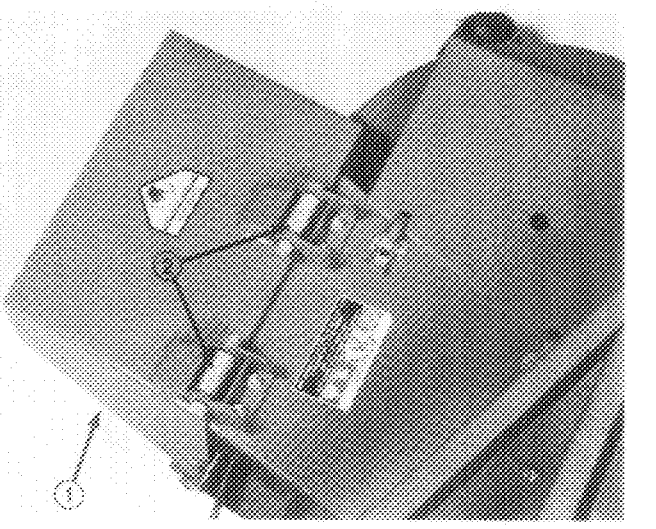

Figure 18

1. Grass deflector 2. Springs

TENSION SPRING ADJUSTMENT

For best performance, adjust spring tension so cutting unit bounce on uneven turf is minimal and it does not ride heavily over fairly flat terrain. If scalping occurs or

OPERATING INSTRUCTIONS

the cut is uneven from side to side, there may be too much weight on the deck and weight may have to be transferred to the traction unit; i.e., increased spring tension.

By contrast, if too much weight is transferred to the traction unit, the deck will bounce excessively and the cut will be uneven. If the cutting unit does not perform properly, adjust as follows:

1. Stop the machine on a level surface, set the parking brake, fully raise the cutting unit, turn the ignition key to OFF and remove it from the ignition switch.

2. Remove the hair pin cotter from the clevis pin and remove the clevis pin. Align the top spring end hole with the new hole selected in the spring cover, insert the clevis pin and secure it with the hair pin cotter.

3. Resume operation. If further adjustments are necessary, refer to steps 1, 2.

CAUTION

Counterbalance spring(s) are in tension when deck is in lowered position. Always raise deck before adjusting or removing spring(s).

LUBRICATION MAINTENANCE

GREASE BEARINGS, BUSHINGS AND GEAR BOX

The cutting unit must be lubricated regularly. If machine is operated under normal conditions, lubricate castor bearings and bushings with No. 2 general purpose lithium grease or molybdenum base grease, after every 8 hours of operation or daily, whichever comes first. All other bearings, bushings and the gear box must be lubricated after every 50 hours of operation.

1. The cutting unit lubrication points are: castor spindle bushings (Fig. 19); castor wheel bearings (Fig. 19); and blade spindle bearings (Fig. 20).

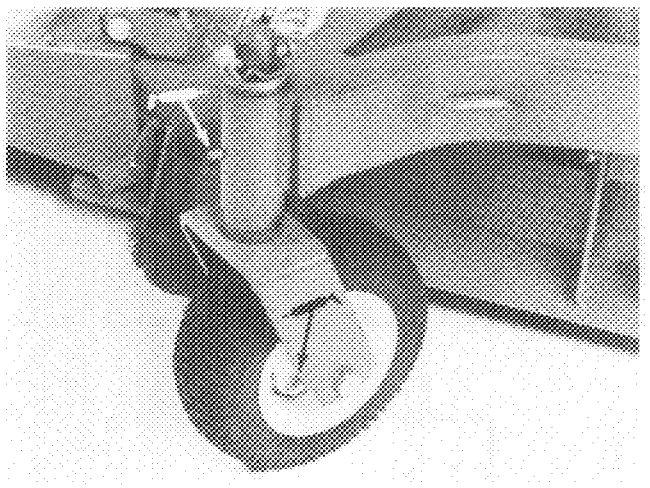

Figure 19

2. Lower cutting unit so castor wheels are on a level surface. Be sure all height-of-cut pins are in the same hole locations. Remove check plug (Fig. 21) from side of gear box and check level of lubricant. If level of lubricant is low, remove fill plug on top of gear box and add SAE 80-90 wt. gear lube until level is up to bottom of check hole.

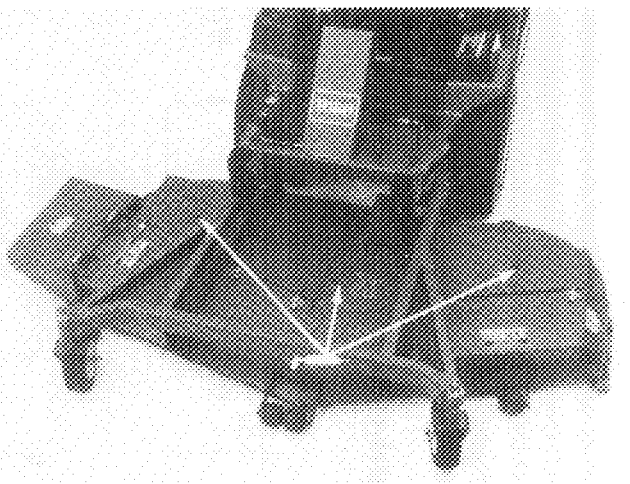

Figure 20

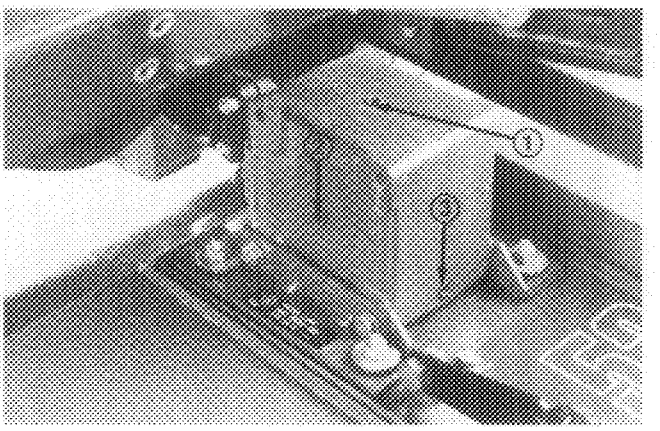

Figure 21

1. Filler plug 2. Check plug 3. Drain plug

CUTTING UNIT MAINTENANCE TROUBLESHOOTING

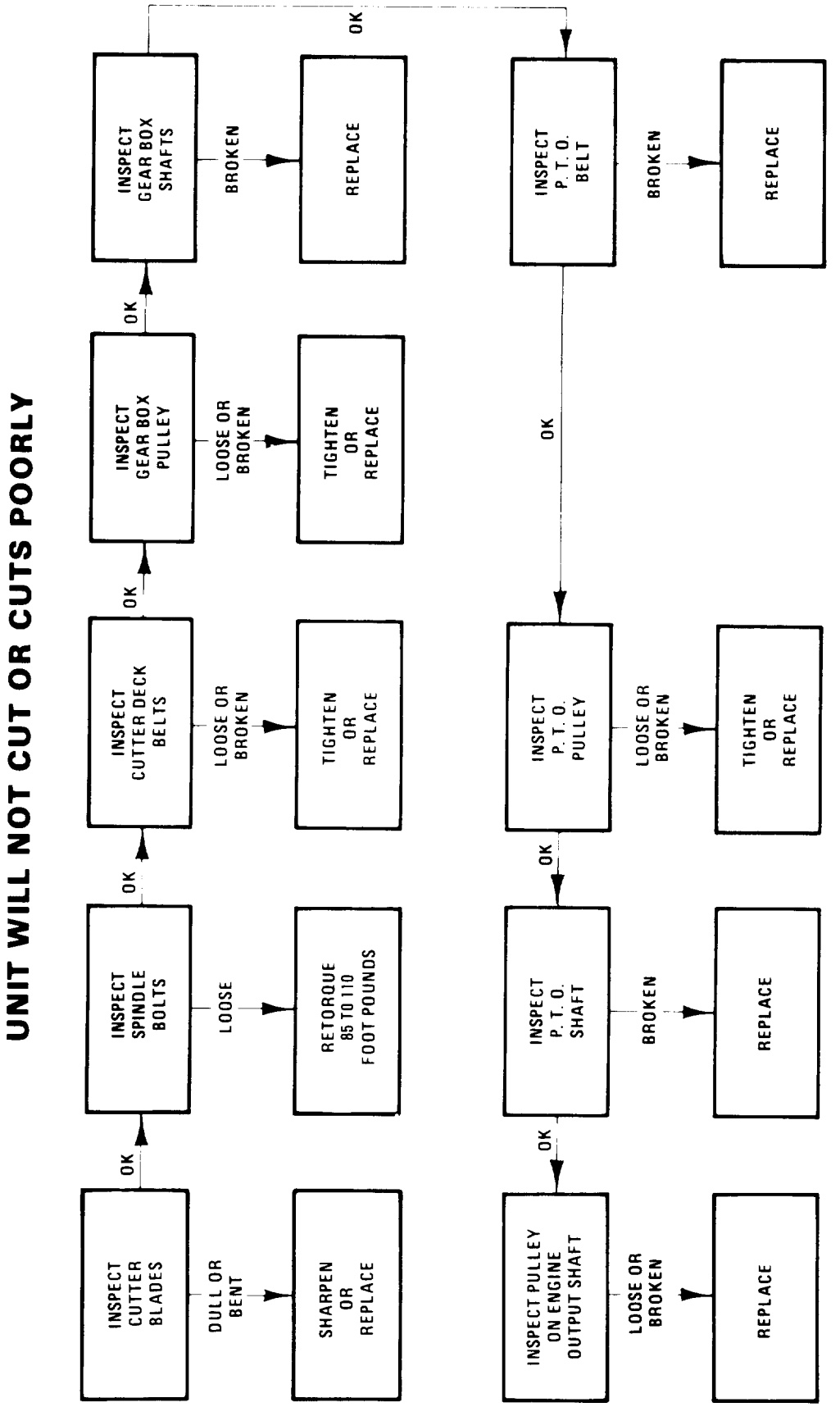

CUTTING UNIT MAINTENANCE

SEPARATING CUTTING UNIT FROM TRACTION UNIT

1. Position machine on level surface, raise cutting unit, engage parking brake, be sure traction pedal is in neutral position, PTO lever is in OFF position, shut engine off and remove key from switch.

CAUTION

Counterbalance springs are in tension when deck is in lowered position. Always raise deck before adjusting or removing springs.

2. Disconnect counterbalance from traction unit, remove lock pins from brackets, separate spring tension assemblies from brackets and lay them down on the deck. Loosely secure lock pins to brackets to prevent losing them. (Fig. 22).

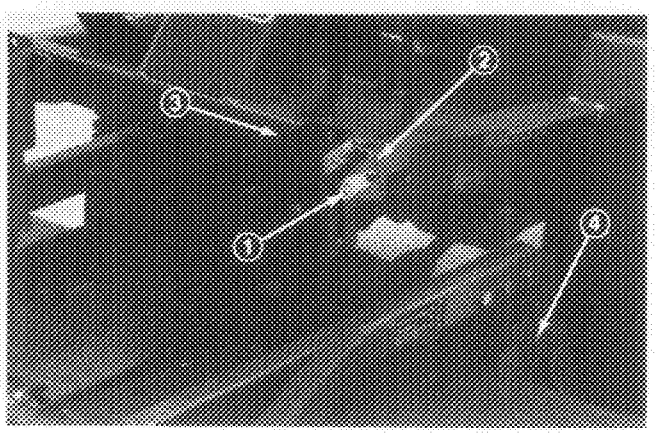

Figure 22

1. Lockpin 3. Spring tension assembly
2. Bracket 4. Height-of-cut clevis pin

3. Lower cutting unit, remove pins (4) from height-of-cut brackets (Fig. 22).

4. Start engine, raise cutting unit frame.

5. Stop engine and slide cutting unit away from traction unit and frame separating male and female section of PTO shaft (Fig. 23).

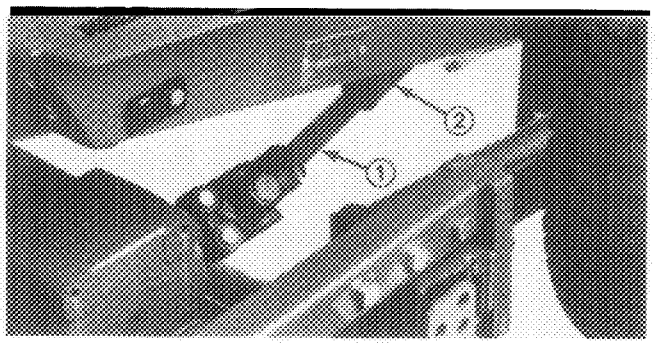

Figure 23

1. Male shaft 2. Female PTO shaft

DANGER

Do not start the engine and engage the PTO lever when PTO shaft is not connected to gear box on cutting unit. If engine is started and PTO shaft is allowed to rotate, serious injury could result.

6. Deck suspension frame must be removed if traction unit will be used with any other accessory.

PTO SHAFT REMOVAL

1. Jack left wheel off shop floor. Support the axle with a jackstand to prevent machine from falling accidentally.

2. Remove five wheel nuts and slide left wheel off axle to expose access hole inside of chassis (Fig. 24)

3. Push PTO lever forward until pulley and brake disengage. Align hole in PTO shaft with hole in chassis (Fig. 24).

4. Through access hole in chassis, drive roll pin out of PTO shaft and output shaft with pin punch and ball peen hammer (Fig. 24).

Note: On Groundsmaster 223-D (Diesel) or GM 224, bolts and locknuts must also be loosened or removed.

5. Install the left wheel with five wheel nuts. Tighten nuts to 60-80 ft-lb (81-109 N·m).

6. Lower machine and remove jack.

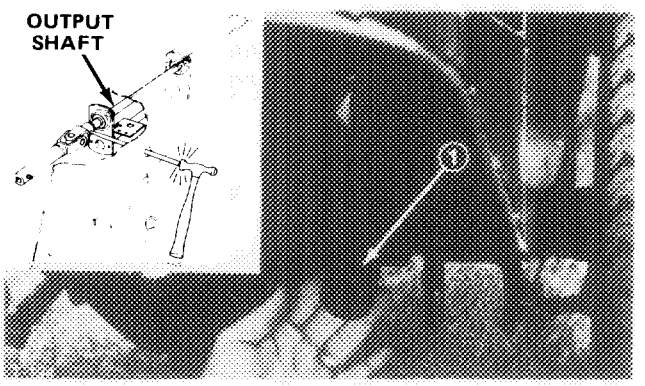

Figure 24

1. PTO shaft

SERVICING BUSHINGS IN CASTOR ARMS

The castor arms have bushings pressed into the top and bottom portion of the tube which, after many hours of operation, will wear. To check the bushings,

move castor fork back and forth and from side-to-side. If castor shaft is loose inside the bushings, bushings are worn and must be replaced.

1. Raise cutting unit and block it so it cannot fall accidentally.

2. Remove lynch pin and thrust washers from top of castor spindle (Fig. 25).

3. Pull castor spindle out of mounting tube. Allow thrust washers to remain on bottom of spindle.

4. Insert pin punch into top or bottom of mounting tube and drive bushing out of tube (Fig. 25). Also drive other bushing out of tube. Clean inside of tubes to remove dirt.

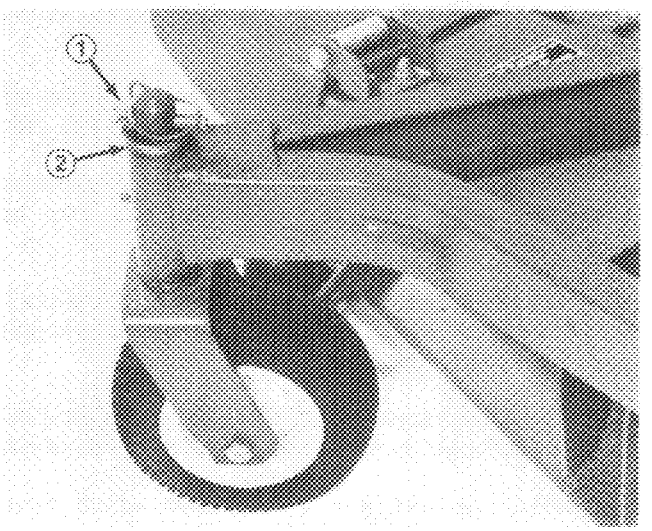

Figure 25

1. Lynch pin 2. Thrust washers

5. Apply grease to inside and outside of new bushings. Using a hammer and flat plate, drive bushings into mounting tube.

6. Inspect castor shaft for wear and replace it if damaged.

7. Push castor spindle through bushings and mounting tube. Slide spacers onto spindle. Install lynch pin through castor spindle to retain all parts in place.

IMPORTANT: When bushings are installed, the inside diameter may collapse slightly, and this may not allow castor spindle to be installed. If castor spindle does not slide through new bushings and mounting tube, ream both bushings to inside diameter of 1.126 inches (28.6 mm).

SERVICING CASTOR WHEEL AND BEARING

The castor wheel rotates on a high-quality roller bearing and is supported by a spanner bushing. Even after many hours of use, provided that the bearing was kept well-lubricated, bearing wear will be minimal. However, failure to keep bearing lubricated will cause rapid wear. A wobbly castor wheel usually indicates a worn bearing or bushing.

1. Remove locknut from capscrew holding castor wheel assembly between castor fork (Fig. 26). grasp castor wheel and slide capscrew out of fork.

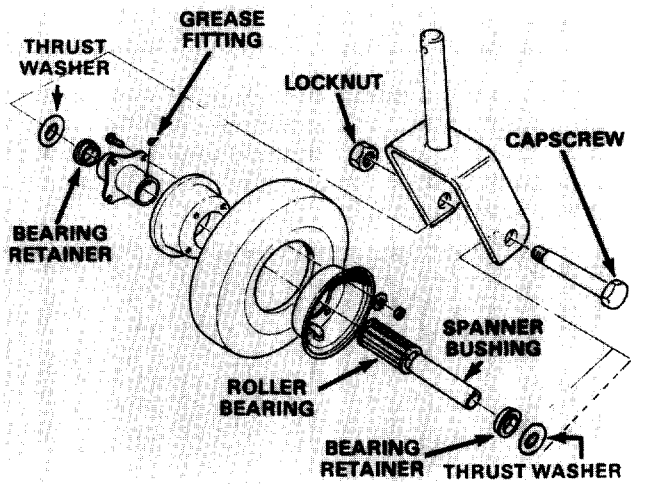

Figure 26

Note: Account for the two thrust washers (Fig. 26).

2. Tip wheel to the side and allow spanner bushing to fall out (Fig. 26).

3. Inspect bearing, spanner bushing and wheel for wear. Replace worn, damaged parts.

4. To reassemble parts, slide spanner bushing through hub assembly.

5. Mount castor wheel assembly and washers between the fork, insert capscrew and locknut. Tighten capscrew and locknut until spanner bushing and washers bottom against inside of castor fork.

6. Pump grease through grease fitting on wheel (Fig. 26) until bearing is greased thoroughly.

CHECKING FOR BENT BLADE

1. Raise cutting unit, engage parking brake, be sure traction pedal is in neutral, PTO lever is in OFF position, stop engine, remove key from switch, and disconnect high tension wires from spark plugs.

CUTTING UNIT MAINTENANCE

Block cutting unit to prevent it from falling accidentally.

2. Rotate blade until the ends face forward and backward (Fig. 27). Measure from inside of cutting unit to cutting edge at front of blade (Fig. 27), and remember this dimension.

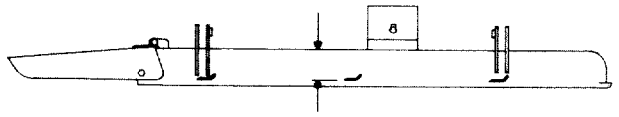

Figure 27

3. Rotate opposite end of blade forward. Measure between the cutting unit and cutting edge of blade at the same position as in step 2. The difference between dimensions obtained in steps 2 and 3 must not exceed 1/8 inch (3 mm). If dimension exceeds 1/8 inch (3 mm), replace the blade because it is bent: refer to Replacing Cutter Blade, page 15.

REPLACING CUTTER BLADE

The blade must be replaced if a solid object is hit, the blade is out-of-balance or if the blade is bent. Always use genuine TORO replacement blades to be sure of safety and optimum performance. Never use replacement blades made by other manufacturers because they could be dangerous.

WARNING

Do not try to straighten a blade that is bent, and never weld a broken or cracked blade. Always use a new blade to assure safety.

1. Raise cutting unit to its highest position. Engage parking brake, be sure traction pedal is in neutral, PTO lever is in OFF position, shut engine off and disconnect high tension wires from spark plugs. Block cutting unit to prevent it from falling accidentally.

2. Grasp end of blade using a rag or thickly padded glove. Remove bladebolt, flatwasher, anti-scalp cup and blade from spindle shaft (Fig. 28).

3. In sequence, install blade — sail facing toward cutting unit — and anti-scalp cup. Secure parts in place with bladebolt and flatwasher. Tighten bladebolt to 85-110 ft-lb.

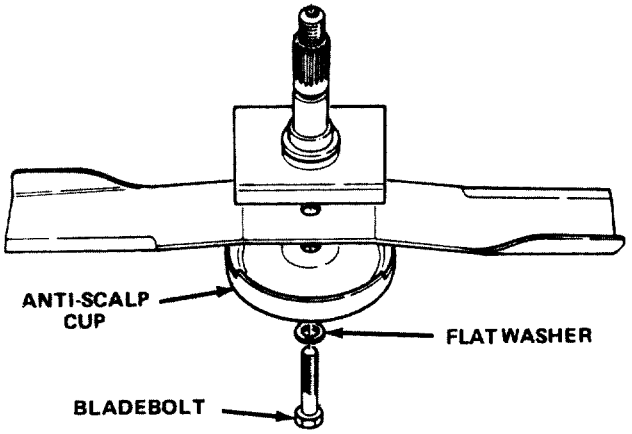

Figure 28

CHECKING SAIL AND SHARPENING CUTTER BLADE

Two areas must be considered when checking and servicing the cutter blade: one area is the sail, the other is the cutting edge. Both cutting edges and the sail, which is the turned up portion opposite the cutting edge, contribute to a good quality-of-cut. The sail is important because it pulls grass up straight, thereby producing an even cut. However, the sail will gradually wear down during operation, and this condition is normal. As the sail wears down, the quality-of-cut will degrade somewhat, even though the cutting edges are sharp. The blade cutting edges must be sharp so the grass is cut rather than torn. A dull cutting edge is evident when tips of the grass appear brown and shredded. Sharpen the cutting edges to correct this condition.

1. Raise cutting unit to its highest position. Engage parking brake, be sure traction pedal is in neutral, PTO lever is in OFF position, stop engine and remove key from switch. Block cutting unit to prevent it from falling accidentally.

2. Examine cutting ends of the blade carefully, especially where the flat and curved parts of the blade meet (Fig. 29-1). Since sand and abrasive material can wear away the metal that connects the flat and curved parts of the blade, check the blade before using the mower. If wear is noticed (Fig. 29-2), replace the blade.

DANGER

If blade is allowed to wear, a slot will form between the sail and flat part of the blade. (Fig. 29-3). Eventually, a piece of the blade may break off and be thrown from under the housing, possibly resulting in serious injury to yourself or bystanders.

CUTTING UNIT MAINTENANCE

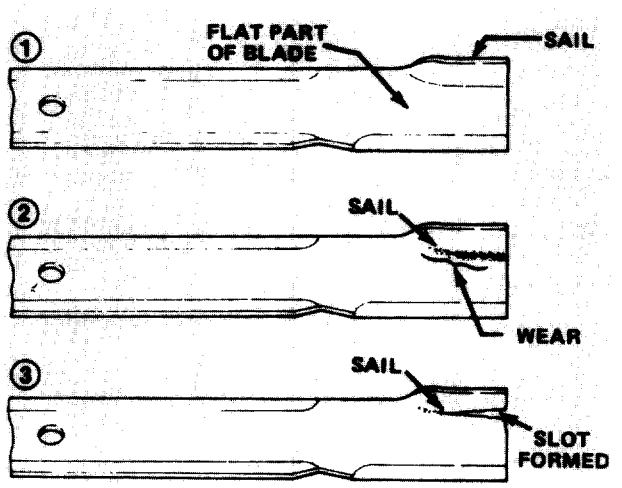

Figure 29

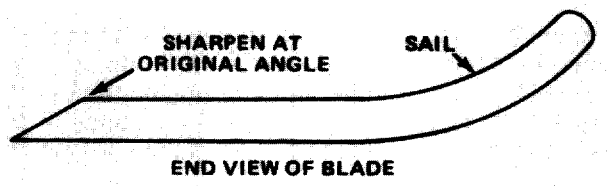

Figure 30

3. Inspect cutting edges of all blades. Sharpen the cutting edges if they are dull or nicked. Sharpen only the top side of the cutting edge and maintain the original cutting angle to make sure of sharpness (Fig. 30). The blade will remain balanced if same amount of metal is removed from both cutting edges.

Note: Remove the blades and sharpen them on a grinder: refer to Removing Cutter Blade, steps 1 and 2, page 13. After sharpening the cutting edges, reinstall blade and anti-scalp cup with bladebolt and lockwasher. Blade sails must be on top of blade. Tighten bladebolt to 85-110 ft-lb.

4. Remove blocking from cutting unit and lower it to the ground.

CORRECTING CUTTING UNIT MISMATCH

If one cutter blade cuts lower than the others, correct as follows:

1. Lower cutting unit onto level surface. Engage parking brake, be sure traction pedal is in neutral and PTO lever is in OFF position. Shut engine off and disconnect high tension wires from spark plugs. Make sure tire pressure is equal in all tires.

2. Raise height-of-cut to 4 in. (102 mm) position (Fig. 33); refer to Adjusting Height-Of-Cut, page 9.

3. Rotate blades so tips line up with one another. Tips of the adjacent blades must be within 1/8 in. (3 mm) of each other. If tips are not within 1/8 in. (3 mm) of each other, proceed to step 10 and add shims between spindle housing and bottom of cutting unit.

4. Check to make sure front height-of-cut pins are resting properly on frame cushions (Fig. 35). If pins are not resting properly, place a shim or shims under cushion to raise it for proper alignment.

5. Position all three blades in the "A" position (Fig. 31) and measure from level surface to the bottom of the tip end of each blade (Fig. 32).

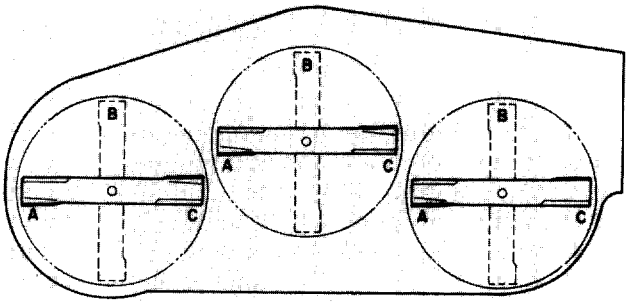

Figure 31

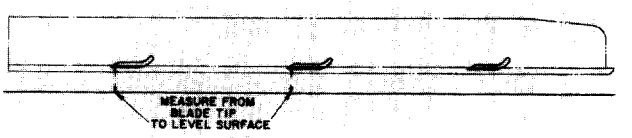

Figure 32

6. Note measurement attained at "A", rotate blades to "B" position (Fig. 31), measure distance of all blades to level surface and note dimensions (Fig. 32).

7. Rotate blades to "C" position, measure and note distance measured (Fig. 31, 32).

8. Compare measurements at various positions. All dimensions must be equal within 1/4 in. (6 mm) from any two adjacent blades. The difference between dimensions from all three blades must not exceed 3/8 inch. If difference exceeds specifications proceed to step 9.

9. Remove capscrews, flatwashers and locknuts from outer spindle in the area where shims must be added. To raise or lower the blade, add a shim, Part No. 3256-24, between spindle housing and bottom of cutting unit. Continue checking alignment of blades and adding shims until tips of blades are within the required dimension.

10. Equalize side to side measurements as follows:

A. Cutting units usually operated at 1 to 2 in. (25 to 51 mm) height-of-cut should have the low

side of the cutting unit raised. Remove the lynch pin securing castor wheel on low end (Fig. 34) and remove castor assembly.

B. Transfer one thrust washer from top side of castor shaft to bottom, install castor assembly and compare blade height of all blades; refer to steps 3 through 6. Continue adding thrust washers if height still does not meet requirements.

C. If cutting unit is operated at 2 to 4 in. (51 to 102 mm) height-of-cut, lower the high side of cutting unit. Remove lynch pin of castor at high end of unit and remove castor assembly (Fig. 34).

D. Transfer one thrust washer from bottom of castor shaft to top side, install assembly and compare blade height of all blades; refer to steps 2 through 6. Repeat procedure if height still does not meet requirements.

E. If height is within specified dimension, install lynch pin, and set height-of-cut to proper height.

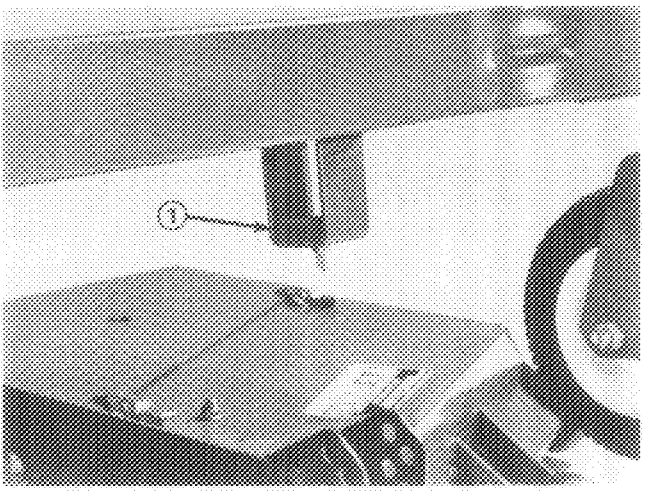

Figure 35

1. Frame cushions

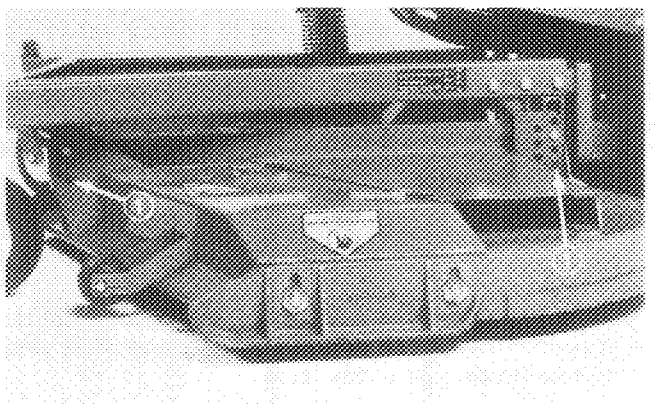

Figure 33

1. Highest height-of-cut setting

REPLACING GRASS DEFLECTOR

1. Raise cutting unit to its highest position. Engage parking brake, be sure traction pedal is in neutral and PTO lever is in OFF position. Stop the engine and remove key from switch. Block cutting unit to prevent it from falling accidentally.

2. Remove two capscrews, locknuts, and springs securing deflector mounts to pivot brackets (Fig. 36).

3. To remove the pivot brackets, remove carriage bolts and locknuts (Fig. 36).

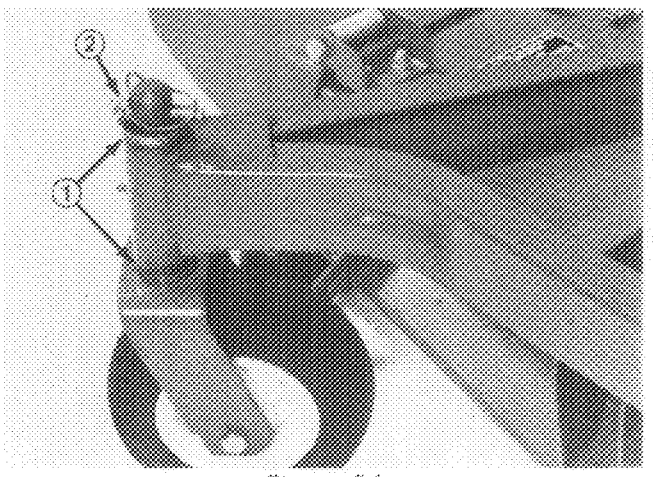

Figure 34

1. Thrust washers (as required) 2. Lynch pin

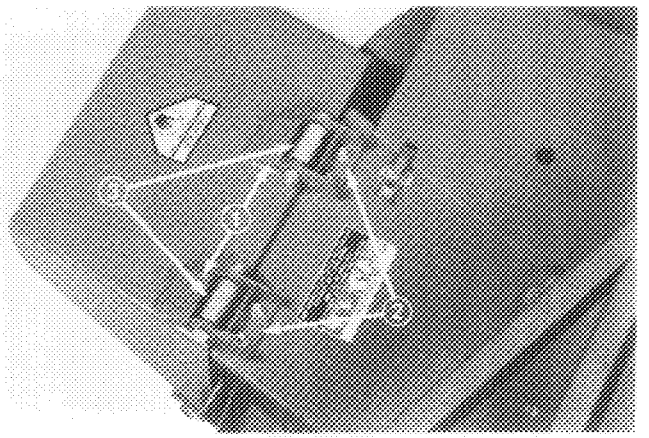

Figure 36

1. Deflector mounts 2. Pivot brackets 3. Pivot springs

CUTTING UNIT MAINTENANCE

4. Reinstall pivot brackets on top of discharge opening with carriage bolts and locknuts. Head of carriage bolts must be on inside of cutting unit.

5. Position deflector mounts on pivot brackets and secure parts together with capscrews, springs and locknuts. Tighten locknuts until they are flush against deflector pivots.

6. Lift deflector and allow it to drop to check spring tension. Deflector must be held firmly in full downward position by spring tension. Correct if necessary.

7. Remove blocking from under cutting unit and lower it to the floor.

ADJUSTING IDLER PULLEY

The idler pulley applies force against the belt so power can be transmitted to the blade pulleys. If the idler is not tensioned against the belt with sufficient force, maximum power will not be transmitted to the pulleys. Tension on the belt requires 40 to 50 ft-lb (54 to 68 N·m) of torque on the large nut, which applies force against the belt. If the idler is not adjusted to these specifications, adjustment is necessary.

1. Lower cutting unit, engage parking brake, be sure traction pedal is in neutral position, PTO lever is in OFF position, stop engine and remove key from switch.

2. Release and unhook latches securing center cover to top of cutting unit. Remove cover from cutting unit.

3. Loosen two nuts securing idler plate in place (Fig. 32). Using a socket and torque wrench, tighten the idler adjusting nut (Fig. 37) until proper torque value is achieved.

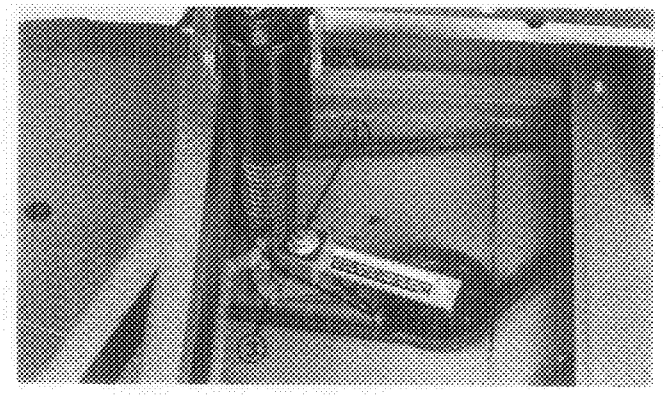

Figure 37

1. *Idler adjusting nut*
2. *Idler plate*
3. *Flange nuts*

4. Hold the torque against the belt and tighten the two nuts so idler plate is held securely in place (Fig. 37). Release the idler adjusting nut, install cover, and secure latches.

ADJUSTING COVER LATCHES

If cutting unit covers fit loose, latch tension may be adjusted by loosening latch mounting screws, and sliding latches (slotted mounting holes in cutting unit) to proper position.

REPLACING DRIVE BELT

The blade drive belt, tensioned by the adjustable idler, is very durable. However, after many hours use, the belt will show signs of wear. Signs of a worn belt are: squealing when belt is rotating, blades slipping when cutting grass, frayed edges, burn marks and cracks. Replace the belt if any of these conditions are evident.

1. Lower cutting unit to the floor. Engage parking brake, be sure traction pedal is in neutral and PTO lever is in OFF position. Stop the engine and remove key from switch.

2. Release and unhook latches securing covers to top of cutting unit. Remove covers.

3. Loosen two nuts securing idler plate in place (Fig. 37) and remove old belt from pulleys.

4. To install new belt, the gear box base must be removed. To do this, remove four carriage bolts, and locknuts holding gear box base.

5. Install new belt around gear box pulley, spindle pulleys, stationary idler pulley and adjustable idler pulley (Fig. 38).

6. Install gear box base with carriage bolts and locknuts.

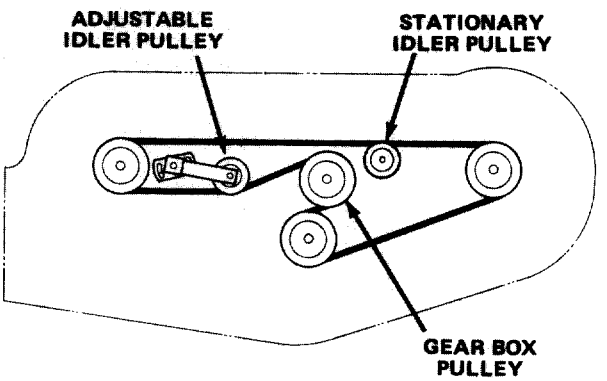

BELT ROUTING

Figure 38

7. Using a torque wrench, adjust tension of idler pulley against the belt: refer to Adjusting Idler Pulley, page 18.

8. Reinstall covers and latch.

REPLACING IDLER PULLEY AND ARM

1. Lower cutting unit, engage parking brake, be sure traction pedal is in neutral, PTO lever is in OFF position and stop the engine.

2. Release and unhook latches securing center cover to top of cutting unit.

3. Loosen two nuts securing idler plate in place (Fig. 39). Belt tension will be released when nuts are loosened.

4. Remove large nut and flatwasher retaining idler arm on idler plate shaft (Fig. 39). Slide arm off shaft and account for the square key.

5. Remove capscrew and locknut securing idler pulley and arm together (Fig. 39).

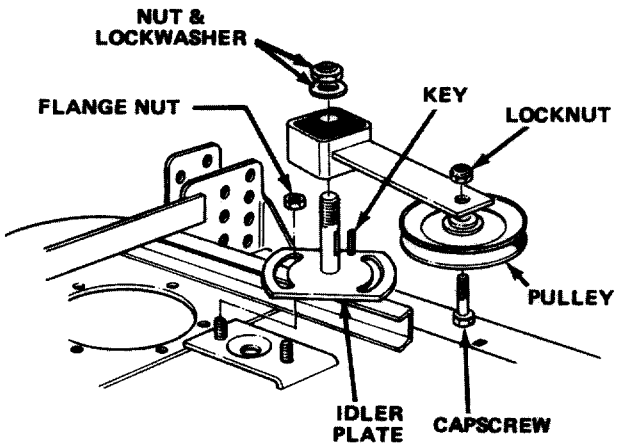

Figure 39

6. To reinstall idler pulley, mount pulley against bottom of idler arm with capscrew and nut. Tighten nut securely.

Note: Head of capscrew must be toward top of cutting unit when idler assembly is installed on idler plate shaft.

7. Install key into keyway in idler plate shaft. Slide idler arm socket onto shaft and retain it in place with large nut. Tighten nut to 35 ft-lb (47.5 N·m).

8. Adjust idler pulley tension against the belt: refer to Adjusting Idler Pulley, page 18.

9. Reinstall cover and latch securely.

REPLACING IDLER PLATE

1. Lower cutting unit, engage parking brake, be sure traction pedal is in neutral and PTO lever is in OFF position. Stop the engine and remove key from ignition switch.

2. Release and unhook latches securing center cover to top of cutting unit.

3. Loosen two nuts securing idler plate in place (Fig. 39). Belt tension will be released when nuts are loosened.

4. Remove large nut retaining idler arm on idler plate shaft. Slide arm off shaft and account for the square key.

5. Remove two flange nuts, holding slotted idler plate in place (Fig. 39).

6. To install idler plate, slide plate and locknuts onto stud guides. Thread nuts onto stud guides, but do not tighten them.

7. Install key into keyway in idler plate shaft. Slide idler arm socket onto shaft and retain it in place with large nut. Tighten nut to 35 ft-lb (47.5 N·m).

8. Adjust idler pulley tension against the belt: refer to Adjusting Idler Pulley, page 18.

9. Reinstall cover and latch securely.

REPLACING SPINDLE PULLEY

1. Lower cutting unit, engage parking brake, be sure traction pedal is in neutral position and PTO lever is in OFF position. Stop the engine and remove key from ignition switch.

2. Remove flangehead capscrews or release and unhook latches securing covers to top of cutting unit. Remove covers from cutting unit.

3. Loosen two nuts securing idler plate so tension of the idler pulley against the belt is released (Fig. 39).

4. Raise cutting unit to its highest position. Engage parking brake, be sure traction pedal is in neutral and PTO lever is in OFF position. Stop the engine and remove key from ignition switch. Block cutting unit to prevent it from falling accidentally.

5. Remove nut and flatwasher retaining pulley (Fig. 40) on spindle shaft. Pull pulley off shaft.

CUTTING UNIT MAINTENANCE

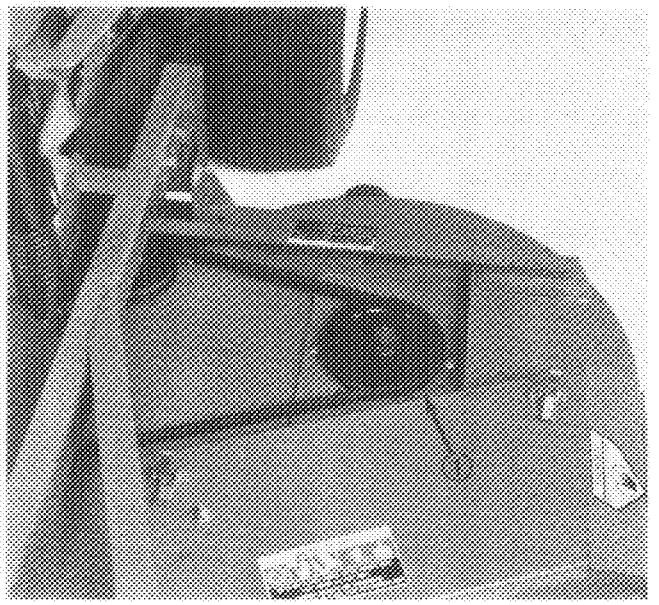

Figure 40

1. Spindle housing assembly

6. Check splines on inside of pulley. If splines are damaged, replace the pulley. When installing a new pulley, check the splines on end of spindle shaft. Splines on the spindle shaft must not be damaged. If splines are damaged, the spindle shaft must be replaced before a new pulley is installed.

7. Install new pulley on spindle shaft with flat-washer and locknut. Tighten nut to 100 ft-lb (136 N·m).

8. Remove blocking and lower cutting unit.

9. Adjust idler pulley tension against the belt: refer to Adjusting Idler Pulley, page 18.

10. Install covers and latch securely.

IDENTIFICATION AND ORDERING

MODEL AND SERIAL NUMBERS

The cutting unit has two identification numbers: a model number and a serial number. These numbers are stamped into a plate. The cutting unit identification plate is located on the frame, behind the right caster wheel. In any correspondence concerning the cutting unit, supply the model and serial numbers to assure correct information and replacement parts are obtained.

To order replacement parts from an authorized TORO Distributor, supply the following information:

1. Model and serial numbers of the cutting unit.

2. Part number, description and quantity of parts desired.

Note: Do not order by reference number if a parts catalog is being used; use the part number.

SERVICE INTERVAL CHART

Date									
Hour Meter Reading									
Service Interval ↓		Daily	10	50	100	150	200	250	300
Check Blades	Daily								
Lubricate Caster Arm Bushings	Daily								
Lubricate Caster Wheel Bearings	Daily								
Lubricate Grease Fittings	50								
Clean Cutting Unit	50								
Check Blade Drive Belts	50								
Check Gear Box Oil	50								
Change Gear Box Oil	250								

Date									
Hour Meter Reading									
Service Interval ↓		350	400	450	500	550	600	650	700
Check Blades	Daily								
Lubricate Caster Arm Bushings	Daily								
Lubricate Caster Wheel Bearings	Daily								
Lubricate Grease Fittings	50								
Clean Cutting Unit	50								
Check Blade Drive Belts	50								
Check Gear Box Oil	50								
Change Gear Box Oil	250								

SERVICE SPECIFICATIONS:

Cutting Unit Gear Box Oil — 80-90 wt. Gear Lube

SERVICE INTERVAL CHART

Date									
Hour Meter Reading									
Service Interval ↓		Daily	10	50	100	150	200	250	300
Check Blades	Daily								
Lubricate Caster Arm Bushings	Daily								
Lubricate Caster Wheel Bearings	Daily								
Lubricate Grease Fittings	50								
Clean Cutting Unit	50								
Check Blade Drive Belts	50								
Check Gear Box Oil	50								
Change Gear Box Oil	250								

Date									
Hour Meter Reading									
Service Interval ↓		350	400	450	500	550	600	650	700
Check Blades	Daily								
Lubricate Caster Arm Bushings	Daily								
Lubricate Caster Wheel Bearings	Daily								
Lubricate Grease Fittings	50								
Clean Cutting Unit	50								
Check Blade Drive Belts	50								
Check Gear Box Oil	50								
Change Gear Box Oil	250								

SERVICE SPECIFICATIONS:

Cutting Unit Gear Box Oil — 80-90 wt. Gear Lube

SERVICE INTERVAL CHART

Date									
Hour Meter Reading									
Service Interval ↓		Daily	10	50	100	150	200	250	300
Check Blades	Daily								
Lubricate Caster Arm Bushings	Daily								
Lubricate Caster Wheel Bearings	Daily								
Lubricate Grease Fittings	50								
Clean Cutting Unit	50								
Check Blade Drive Belts	50								
Check Gear Box Oil	50								
Change Gear Box Oil	250								

Date									
Hour Meter Reading									
Service Interval ↓		350	400	450	500	550	600	650	700
Check Blades	Daily								
Lubricate Caster Arm Bushings	Daily								
Lubricate Caster Wheel Bearings	Daily								
Lubricate Grease Fittings	50								
Clean Cutting Unit	50								
Check Blade Drive Belts	50								
Check Gear Box Oil	50								
Change Gear Box Oil	250								

SERVICE SPECIFICATIONS:

Cutting Unit Gear Box Oil — 80-90 wt. Gear Lube

The Toro Promise

A ONE YEAR LIMITED WARRANTY

The Toro Company promises to repair your TORO Product if defective in materials or workmanship. The following time periods from the date of purchase apply:

Commercial Products . . . . . 1 Year

The costs of parts and labor are included, but the customer pays the transportation costs on walk rotary mowers with cutting unit widths of less than 25".

If you feel your TORO product is defective and wish to rely on The Toro Promise, the following procedure is recommended:

1. Contact your Authorized TORO Distributor or Commercial Dealer (the Yellow Pages of your telephone directory is a good reference source).
2. The TORO Distributor or Commercial Dealer will advise you on the arrangements that can be made to inspect and repair your product.
3. The TORO Distributor or Commercial Dealer will inspect the product and advise you whether the product is defective and, if so, make all repairs necessary to correct the defect without an extra charge to you.

If for any reason you are dissatisfied with the distributor's analysis of the defect or the service performed, you may contact us.

Write:

TORO Commercial Products Service Department
8111 Lyndale Avenue South
Minneapolis, Minnesota 55420

The above remedy of product defects through repair by an Authorized TORO Distributor or Commercial Dealer is the purchaser's sole remedy for any defect.

THERE IS NO OTHER EXPRESS WARRANTY. ALL IMPLIED WARRANTIES OF MERCHANTABILITY AND FITNESS FOR USE ARE LIMITED TO THE DURATION OF THE EXPRESS WARRANTY.

Some states do not allow limitations on how long an implied warranty lasts, so the above limitation may not apply to you.

This Warranty applies only to parts or components which are defective and does not cover repairs necessary due to normal wear, misuse, accidents, or lack of proper maintenance. Regular, routine maintenance of the unit to keep it in proper condition is the responsibility of the owner.

All warranty repairs reimbursable under the Toro Promise must be performed by an Authorized TORO Commercial Dealer or Distributor using Toro approved replacement parts.

Repairs or attempted repairs by anyone other than an Authorized TORO Distributor or Commercial Dealer are not reimbursable under the Toro Promise. In addition, these unauthorized repair attempts may result in additional malfunctions, the correction of which is not covered by warranty.

THE TORO COMPANY IS NOT LIABLE FOR INDIRECT, INCIDENTAL OR CONSEQUENTIAL DAMAGES IN CONNECTION WITH THE USE OF THE PRODUCT INCLUDING ANY COST OR EXPENSE OF PROVIDING SUBSTITUTE EQUIPMENT OR SERVICE DURING PERIODS OF MALFUNCTION OR NON-USE.

Some states do not allow the exclusion or limitation of incidental or consequential damages, so the above limitation or exclusion may not apply to you.

This warranty gives you specific legal rights, and you may also have other rights which vary from state to state.

COUNTRIES OTHER THAN THE UNITED STATES OR CANADA

Customers who have purchased TORO products exported from the United States or Canada should contact their TORO Distributor (Dealer) to obtain guarantee policies for your country, province or state. If for any reason you are dissatisfied with your Distributor's service or have difficulty obtaining guarantee information, contact the TORO importer. If all other remedies fail, you may contact us at The Toro Company.

Compliance with Radio Interference Regulations Certified.
Certifie Conforme au Reglement sur le Brouillage Radioelectrique.

Litho in U.S.A.