Form No. 3385-224 Rev A

TORO®

Count on it.

Parts Catalog

CCR™ 6053 R Quick Clear Snowthrower

Model No. 38567—Serial No. 315000001 and Up

Register at www.Toro.com.
Original Instructions (EN)

CE

3385-224 A

Ordering Replacement Parts

To order replacement parts, please supply the part number, the quantity, and the description of each part desired.

Understanding Reference Numbers

Each identified part in an illustration has a reference number. The reference number for a part also appears in the parts list, along with other information about the part.

This catalog uses two special reference number formats, one to indicate parts in a service assembly and another to indicate the quantity of a given part in an illustration.

Service Assembly Reference Numbers

Parts in service assemblies have reference numbers in the form a:b. The a represents the reference number of the entire service assembly and the b represents a sequential number unique to each part within the service assembly.

For example, a wheel assembly might be identified by reference number 6, the tire by 6:1, the valve by 6:2, and the wheel by 6:3. When you order the assembly identified by reference number 6, you receive all parts identified by reference numbers 6:1,6:2, and 6:3. However, you may also order any part individually. Reference numbers of this type appear in illustration and in parts lists.

Reference Numbers Indicating Quantity

In an illustration, if a reference number indicates more than one part, the reference number has the form nX y. The n represents the quantity of the part, the X is the multiplication symbol, and the y represents the reference number.

For example, in an illustration, the reference number 2X 37 means that two of the parts identified by reference number 37 are indicated.

List of Abbreviations

AR: as required

ASM: assembly

BBC: blade brake control

BHTF: button head thread forming

CARR: carriage

CCW: counter clockwise

CW: clockwise

DEG: degrees

DPA: Dual Point Adjustment

ECM: electronic control module

EXT: external

FH: flat head

GA: gauge

HD: heavy-duty

HF: hex flange

HH: hex head

HHF: hex head flange

HHFTF: hex head flange thread forming

HJ: hex jam

HLH: hex lag head

HOC: height-of-cut

HP: high pressure

HSBH: hex socket button head

HSFH: hex socket flat head

HSH: hex socket head

HWH: hex washer head

HWHTF: hex washer head thread forming

HYD: hydraulic

LH: left hand

LP: low pressure

LPG: Liquefied Petroleum Gas

NI: nylon insert

NPTF: national pipe thread fine

PFH: phillips flat head

PPH: phillips pan head

PPHTF: phillips pan head thread forming

PRH: phillips round head

PTH: phillips truss head

PTO: power-take-off

RH: right hand

ROPS: roll-over protection system

RRB: rear roller brush

SFH: slotted fillister head

SHH: slotted hex head

SHWH: slotted hex washer head

SPH: slotted pan head

SQH: square head

SRH: slotted round head

STD: standard

TAP: self tapping

TTH: torx truss head

Contents

Main Frame, Chute and Wheel Assembly 4
Clutch Cable and Belt Drive Assembly 6
Rotor Assembly 8
Engine Assembly 10
No. 1 Engine Assembly No. 121-0426 12
No. 2 Engine Assembly No. 121-0426 14
No. 3 Engine Assembly No. 121-0426 16
Shroud Assembly 18
Chute Control Assembly 20
Upper Handle Assembly 22
Handle Chute Control Assembly 24
Attachments and Accessories 26

© 2014—The Toro® Company
8111 Lyndale Avenue South
Bloomington, MN 55420

Contact us at www.Toro.com.
Printed in the USA.
All Rights Reserved

Main Frame, Chute and Wheel Assembly

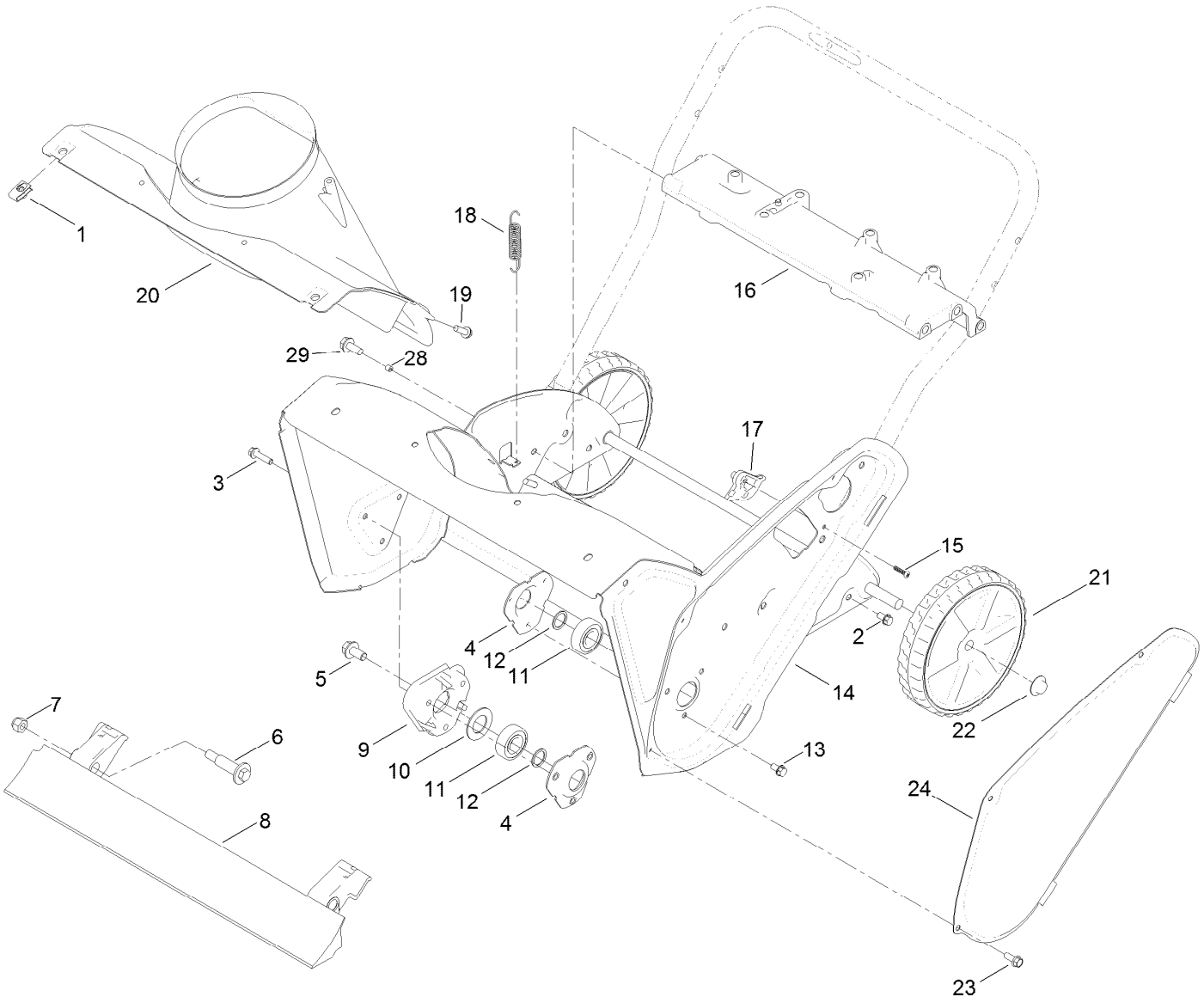

Main Frame, Chute and Wheel Assembly (continued)

Ref.	Part Number	Qty.	Description
1	107069	2	Clip
2	32144-11	4	Screw-HWHTF
3	32144-86	3	Screw-HWHTF
4	108-4943	2	Flange-Bearing
5	110-9380	1	Screw-HWH
6	56-6590	2	Bolt-Wheel
7	3296-39	2	Nut-Lock, NI
8	108-4884	1	Blade-Scraper
9	114-3781	1	Spacer-Bearing, RH
10	110-9353	1	Washer-Rubber
11	100-1048	2	Bearing-Ball
12	52-7280	2	Washer-Thrust
13	32144-4	3	Screw-HWH
14	108-4868-03	1	Housing-Auger
15	94-4496	1	Screw-PPH
16	108-4905	1	Brace-Frame
17	108-4919	1	Guide-Cable, Clutch
18	108-4906	2	Spring-Extension
19	46-8091	3	Screw-HWH
20	108-4871	1	Chute-Lower
21	117-2309	2	Wheel ASM
22	32112-14	2	Nut-Push
23	32144-85	3	Screw-HWH
24	108-4893-03	1	Cover-Belt
28	1-633545	2	Spacer
29	701243	2	Screw-HWHTF

Clutch Cable and Belt Drive Assembly

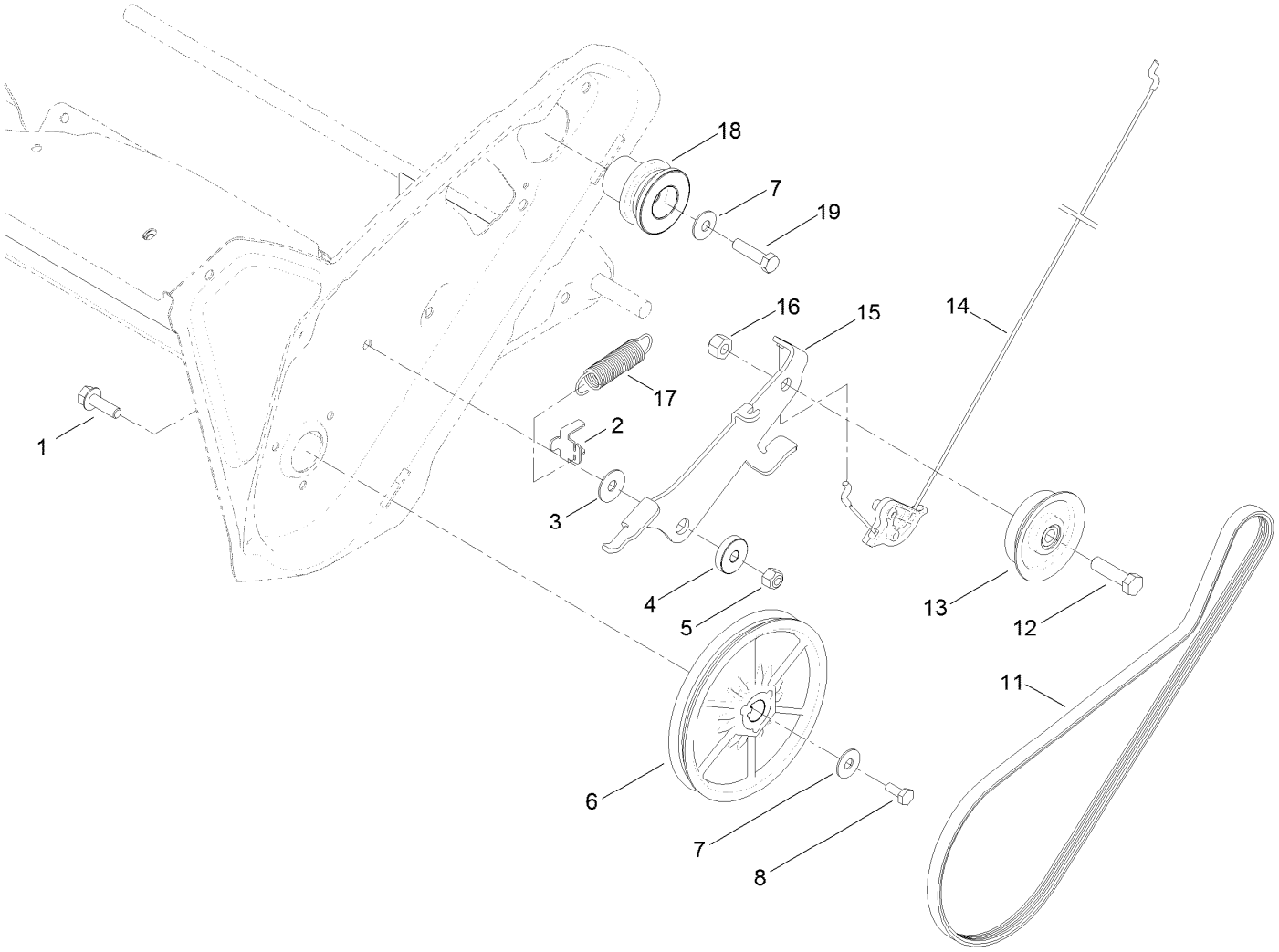

Clutch Cable and Belt Drive Assembly (continued)

Ref.	Part Number	Qty.	Description
1	3234-29	1	Screw-HHF
2	108-4938	1	Clip-Spring, Brake
3	108-4925	1	Washer
4	108-4916	1	Bushing-Pivot
5	3296-29	1	Nut-Lock, NI
6	107-9287	1	Rotor Pulley ASM
7	3290-456	2	Washer-Belleville
8	110-9381	1	Screw-HH
11	108-4921	1	Belt-Drive
12	323-29	1	Screw-HH
13	114-3785	1	Pulley-Idler
14	115-5682	1	Cable-Clutch
15	114-3782	1	Arm-Idler
16	32152-2	1	Nut-Lock, Cone
17	121-6630	1	Spring-Extension
18	121-6605	1	Pulley-Engine
19	121-6646	1	Screw-HH

Rotor Assembly

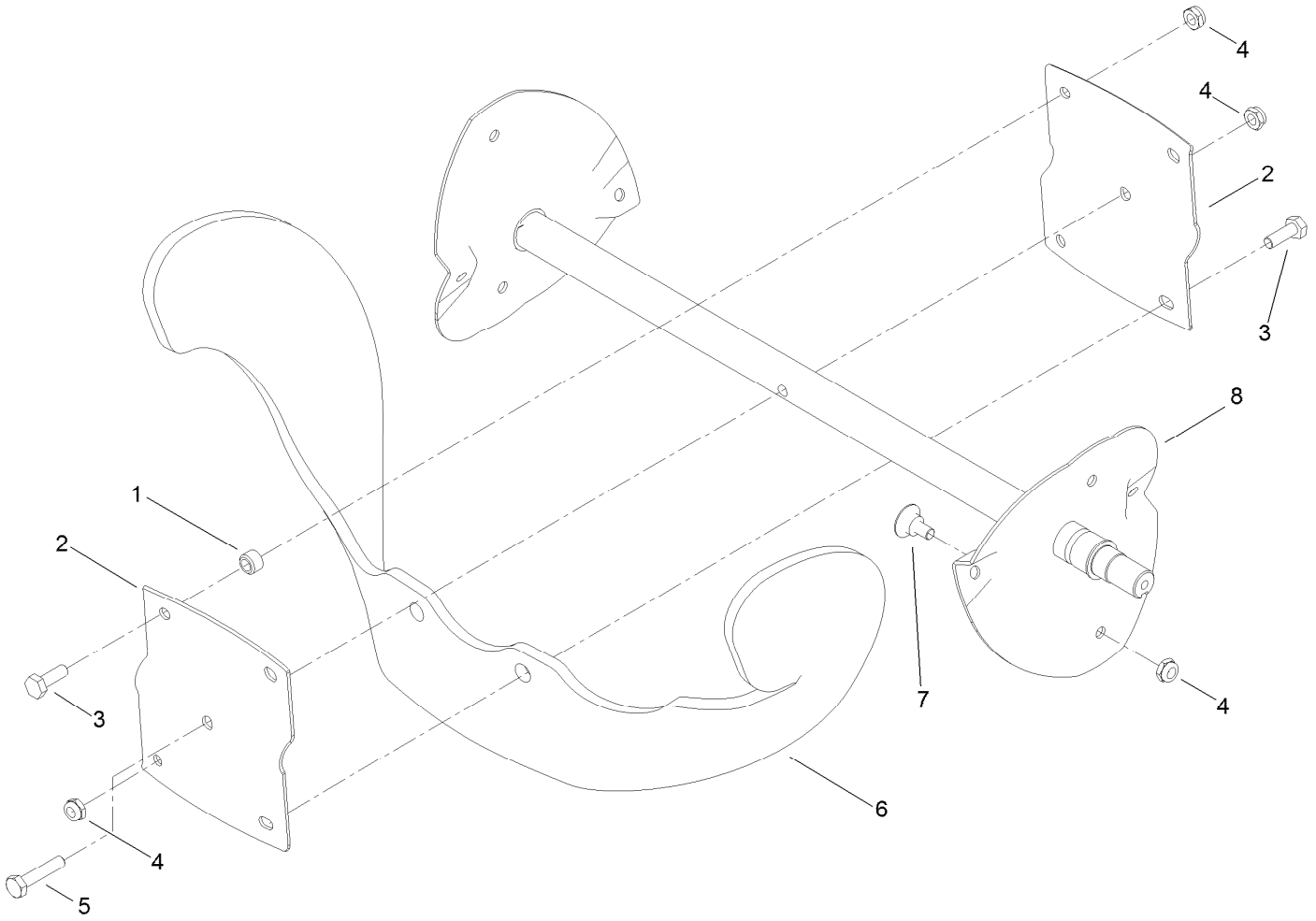

Rotor Assembly (continued)

Ref.	Part Number	Qty.	Description
1	55-9370	4	Spacer-Blade, Rotor
2	66-6600-03	2	Half-Rotor
3	321-4	4	Screw-HH
4	3296-56	13	Nut-Lock, NI
5	321-8	1	Screw-HH
6	99-9313	2	Blade-Rotor
7	84-1971	8	Screw
8	108-4894-03	1	Rotor

Engine Assembly

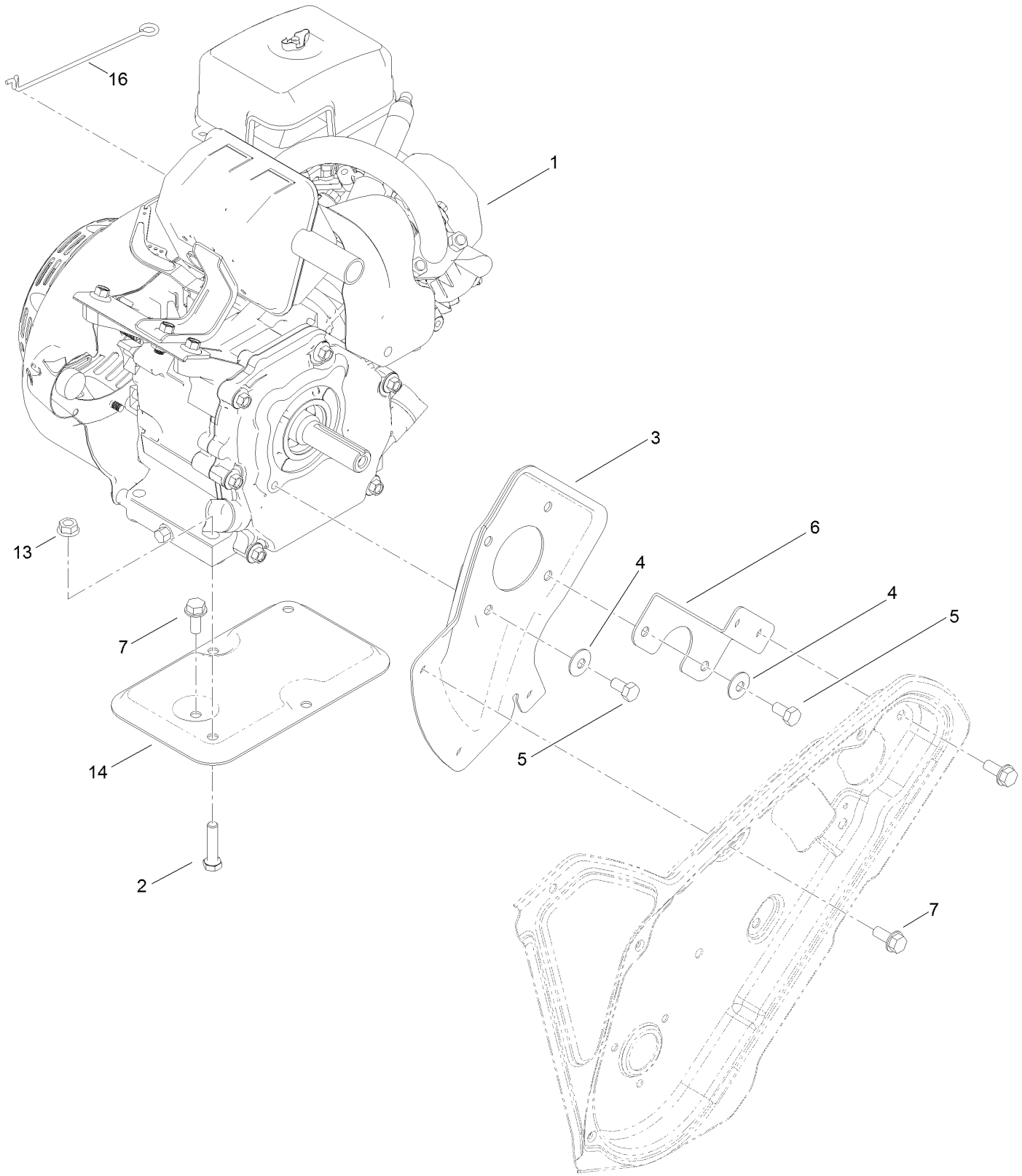

Engine Assembly (continued)

Ref.	Part Number	Qty.	Description
1	121-0426	1	Engine-Lc168Fs-1
2	322-17	2	Screw-HH
3	108-4892-03	1	Plate-Engine, PTO
4	3290-456	4	Washer-Belleville
5	33114-016	4	Screw-HH
6	110-9354-03	1	Support-Engine, Side
7	32144-11	7	Screw-HWHTF
13	32128-20	2	Nut-HF
14	117-6037-03	1	Support-Engine
16	117-6040	1	Link-Knob, Choke

No. 1 Engine Assembly No. 121-0426

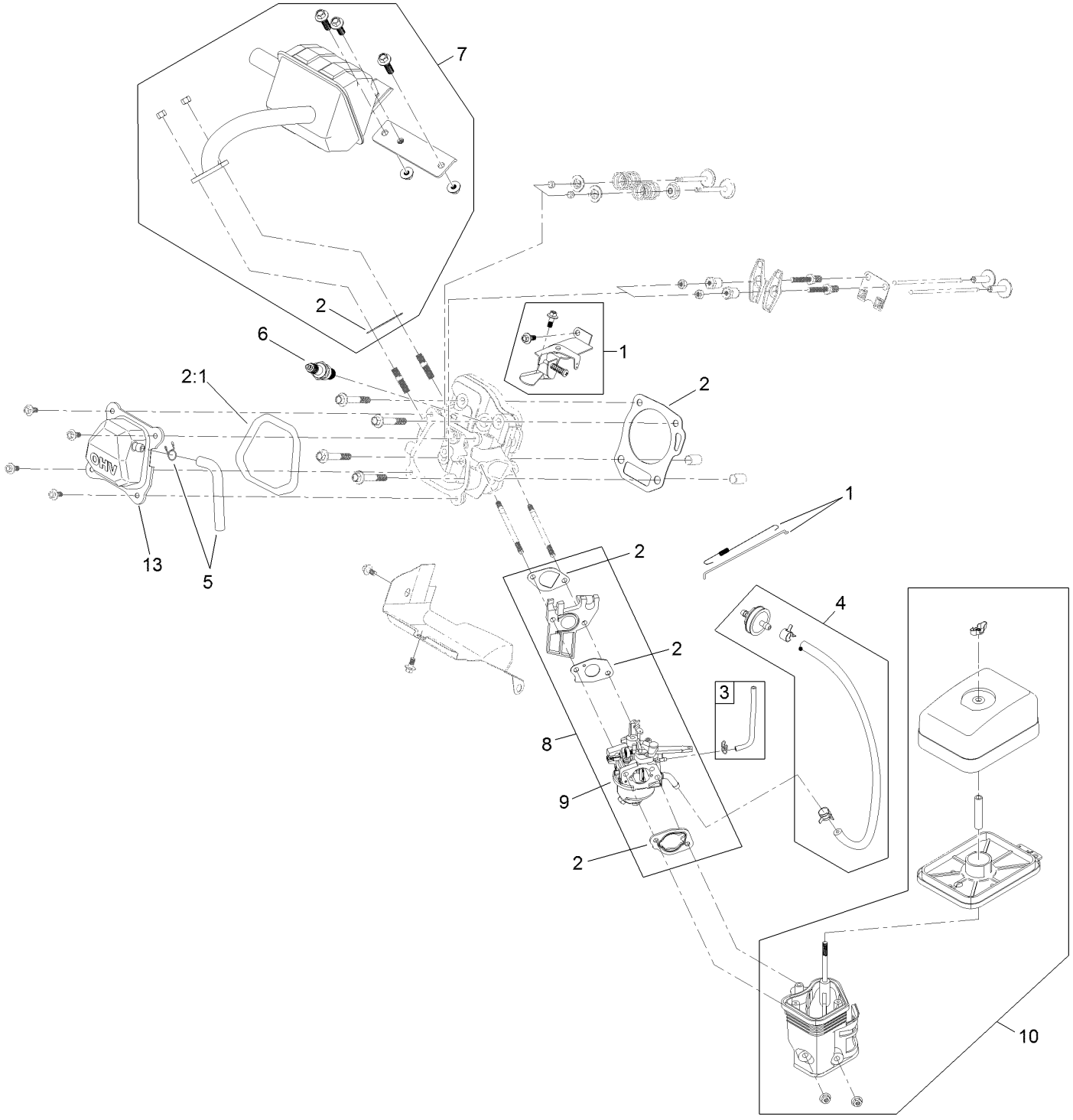

No. 1 Engine Assembly No. 121-0426 (continued)

Ref.	Part Number	Qty.	Description
1	119-1957	1	Governor Kit
2	119-1955	1	Gasket And Seal Kit
2:1	121-0109	1	Gasket-Cover, Valve
3	119-1949	1	Primer Line Kit
4	120-4402	1	Fuel Line Kit
5	119-1921	1	Breather Tube Kit
6	119-1901	1	Plug-Spark
7	119-1954	1	Muffler Kit
8	120-4418	1	Complete Carburetor Service Kit
9	127-9089	1	Carb Repair Kit With Gaskets
10	121-4282	1	Heater Box Kit
13	121-0499	1	Valve Cover ASM

No. 2 Engine Assembly No. 121-0426

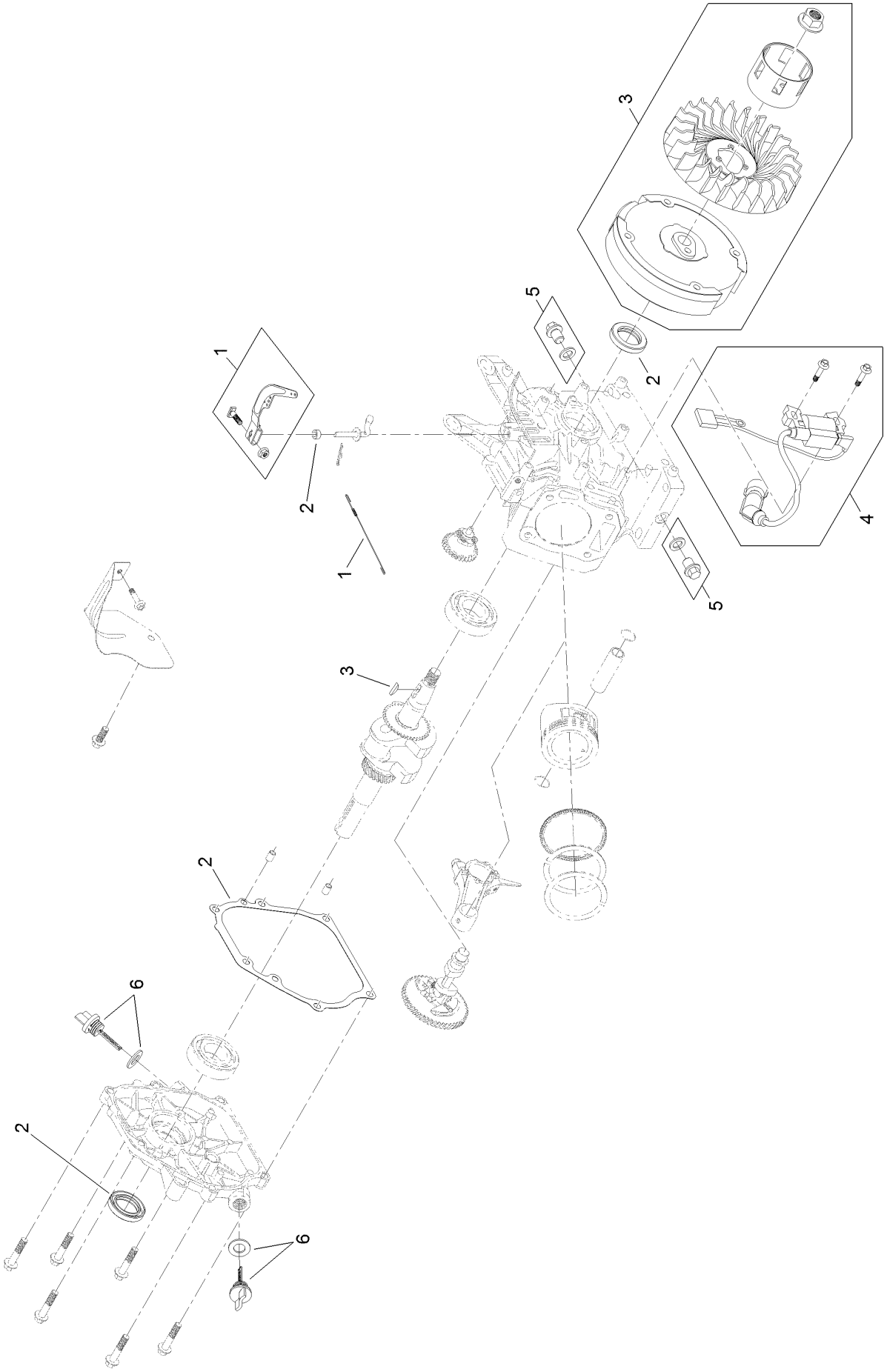

No. 2 Engine Assembly No. 121-0426 (continued)

Ref.	Part Number	Qty.	Description
1	119-1957	1	Governor Kit
2	119-1955	1	Gasket And Seal Kit
3	119-1963	1	Flywheel Kit
4	119-1959	1	Ignition Kit
5	119-1923	2	Drain Plug Kit
6	119-1944	2	Dipstick And O-Ring Kit

No. 3 Engine Assembly No. 121-0426

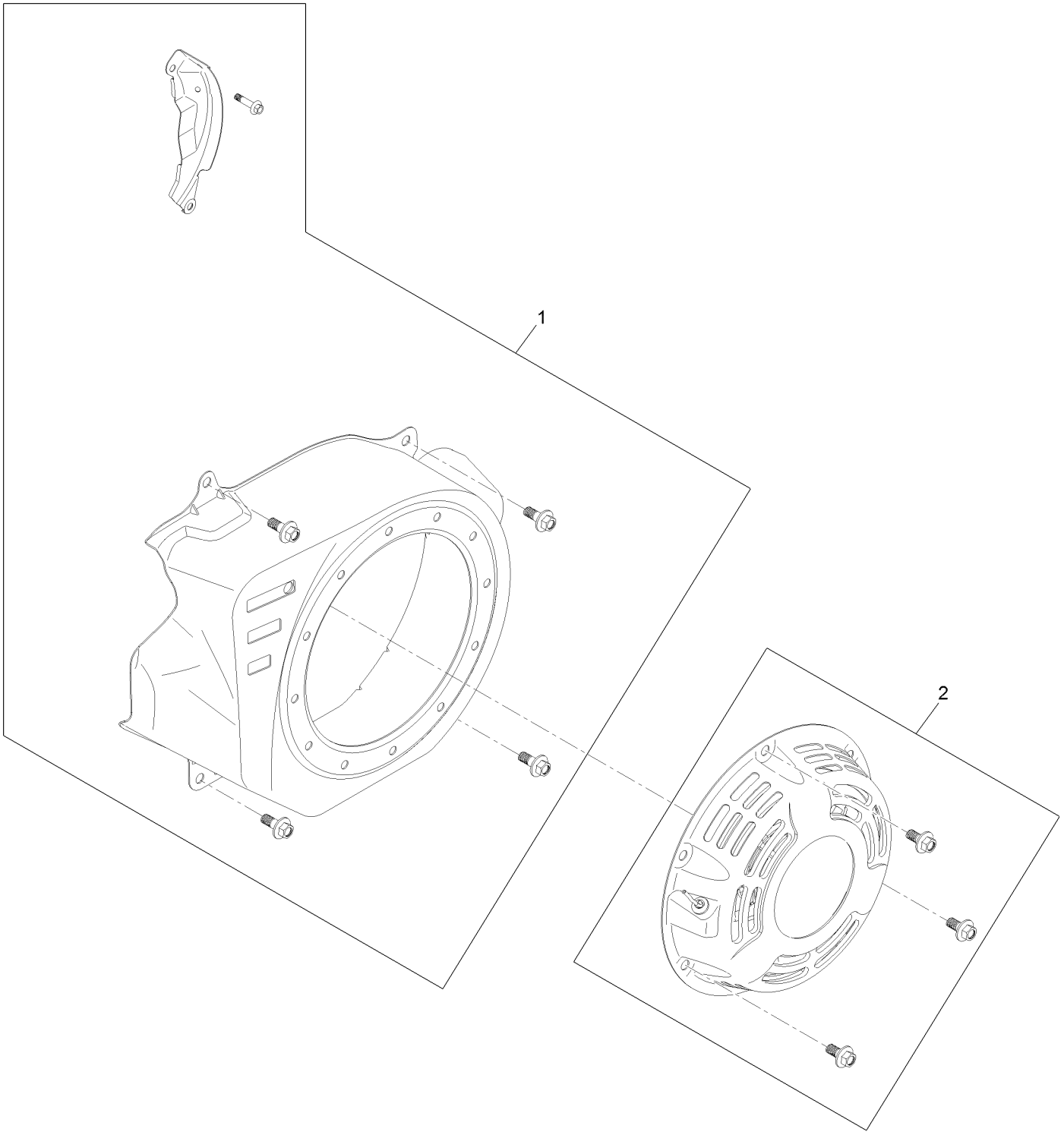

No. 3 Engine Assembly No. 121-0426 (continued)

Ref.	*Part Number*	*Qty.*	*Description*
1	121-4285	1	Blower Shroud Kit
2	121-4252	1	Recoil Kit

Shroud Assembly

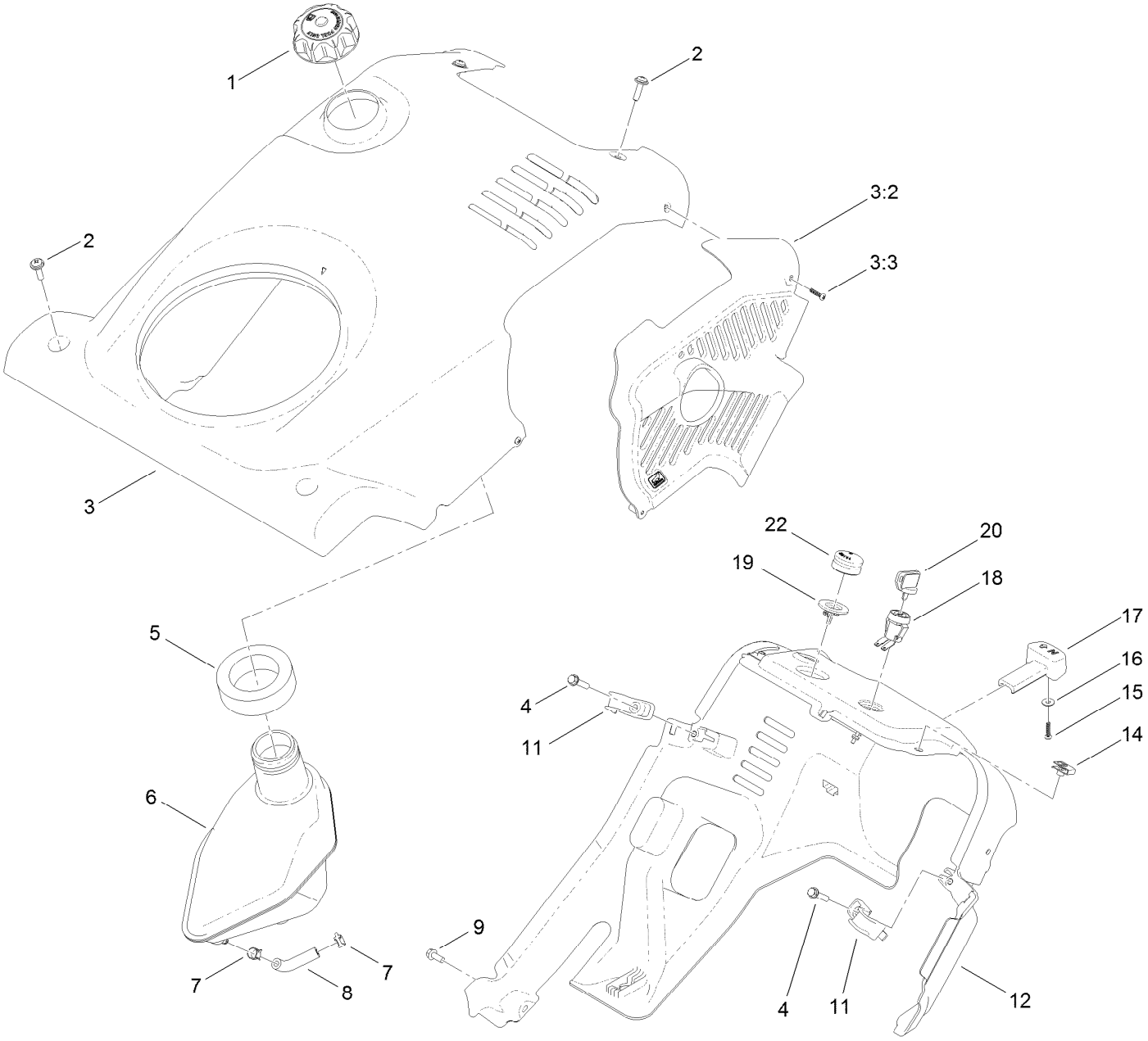

Shroud Assembly (continued)

Ref.	Part Number	Qty.	Description
1	125-7928	1	Cap-Gas
2	110-9361	4	Screw-PPH, Sems
3	120-0100	1	Shroud ASM
3:2	117-6035	1	Baffle-Exhaust, 4-Cycle
3:3	94-4496	2	Screw-PPH
4	46-8092	2	Screw-Plastite
5	114-3773	1	Seal-Tank
6	120-9848	1	Tank-Fuel, Gas
7	2412-98	2	Clamp-Hose
8	114-3765	1	Hose-Fuel
9	32144-85	1	Screw-HWH
11	108-4947	2	Clip-Shroud
12	117-6036	1	Shroud-Lower
14	107069	2	Clip
15	94-4496	1	Screw-PPH
16	3256-49	1	Washer-Flat
17	117-9100	1	Knob-Choke
18	40-5940	1	Switch
19	44-2750	1	Body-Primer
20	63-8360	1	Key-Ignition
22	66-7460	1	Bulb-Primer

Chute Control Assembly

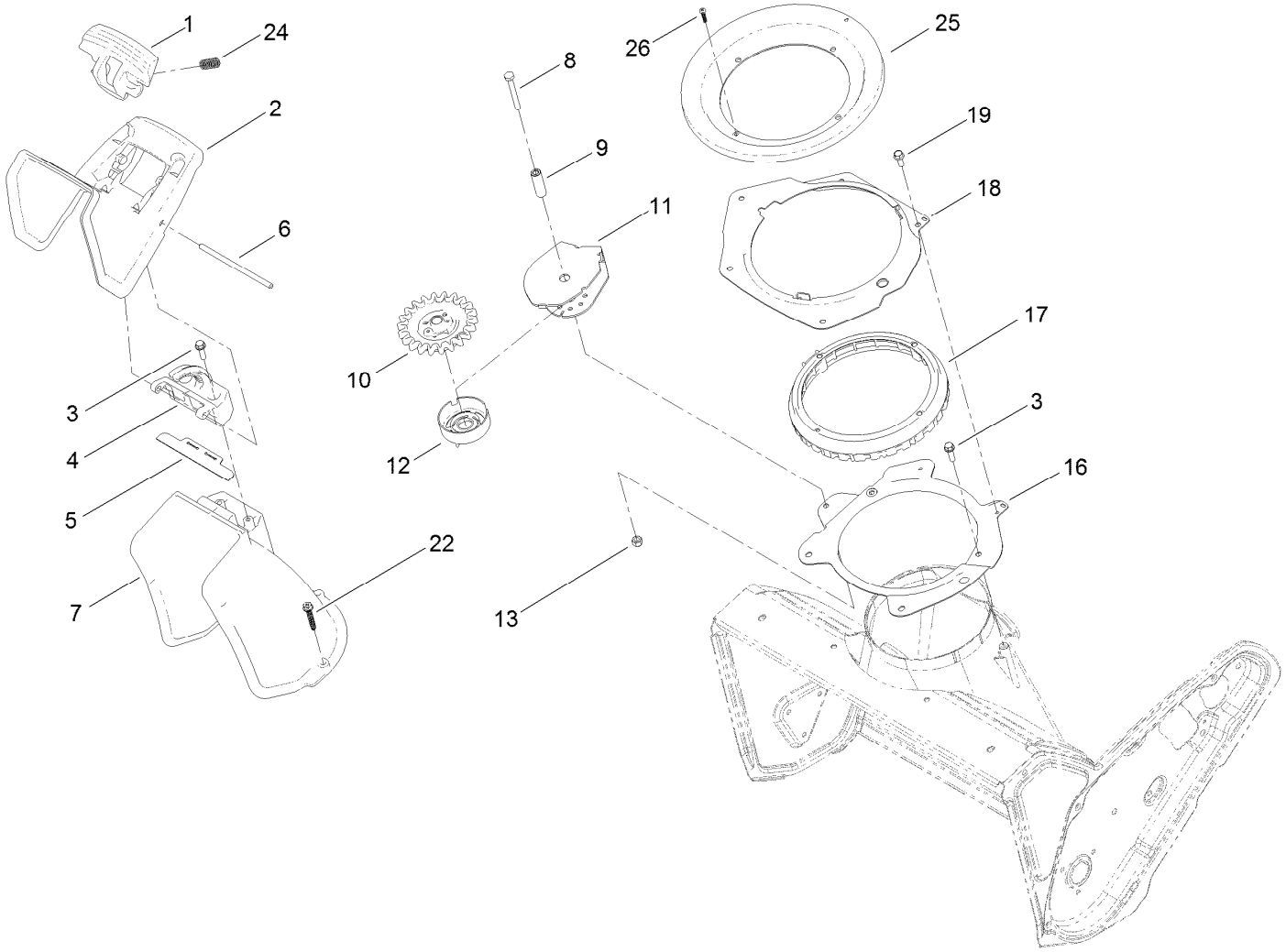

Chute Control Assembly (continued)

Ref.	Part Number	Qty.	Description
1	108-4941	1	Trigger-Deflector
2	117-9121	1	Deflector-Chute, Ce
3	46-8091	6	Screw-HWH
4	108-4942	1	Hinge-Ratchet, Deflector
5	114-3790	1	Seal-Deflector
6	110-9368	1	Pin-Hinge, Deflector
7	108-4939	1	Chute
8	321-18	1	Screw-HH
9	108-4877	1	Spacer-Sleeve, Pinion
10	108-4875	1	Pinion-Gear
11	108-4900-03	1	Bracket-Pinion
12	114-3792	1	Retainer-Cable
13	3296-42	1	Nut-Lock, NI
16	108-4883-03	1	Ring-Support, Chute
17	108-4882	1	Ring-Chute, Gear
18	108-4874-03	1	Retainer-Ring, Chute
19	32144-85	2	Screw-HWH
22	108-4946	3	Screw-Plastite
24	110-9360	2	Spring-Compression
25	114-3772	1	Seal-Ring, Chute
26	94-4496	1	Screw-PPH

Upper Handle Assembly

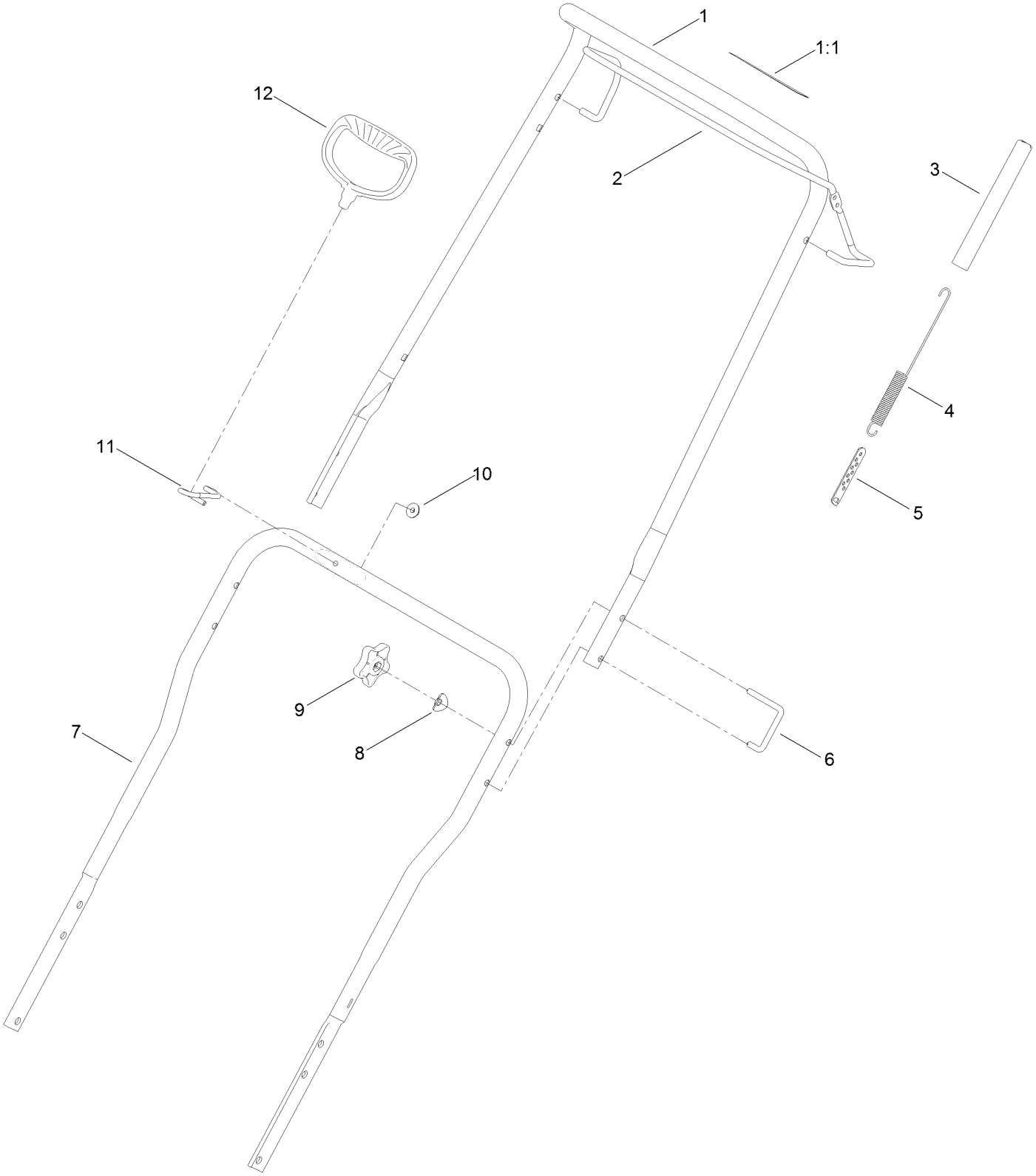

Upper Handle Assembly (continued)

Ref.	Part Number	Qty.	Description
1	114-3768	1	Upper Handle ASM
1:1	94-2577	1	Decal-Drive, Rotor
2	114-3780-03	1	Bail-Control
3	114-3796	1	Cover-Spring
4	117-9146	1	Spring-Extension, Clutch
5	71-5330	1	Adjuster-Cable, Clutch
6	108-4887	2	Lock-Handle
7	127-5956-03	1	Handle-Lower
8	107-3844	2	Washer
9	114-3779	2	Knob-Handle
10	114-3778	1	Nut-Lock, NI
11	108-4949	1	Guide-Rope
12	117-9104	1	Handle-Recoil

Handle Chute Control Assembly

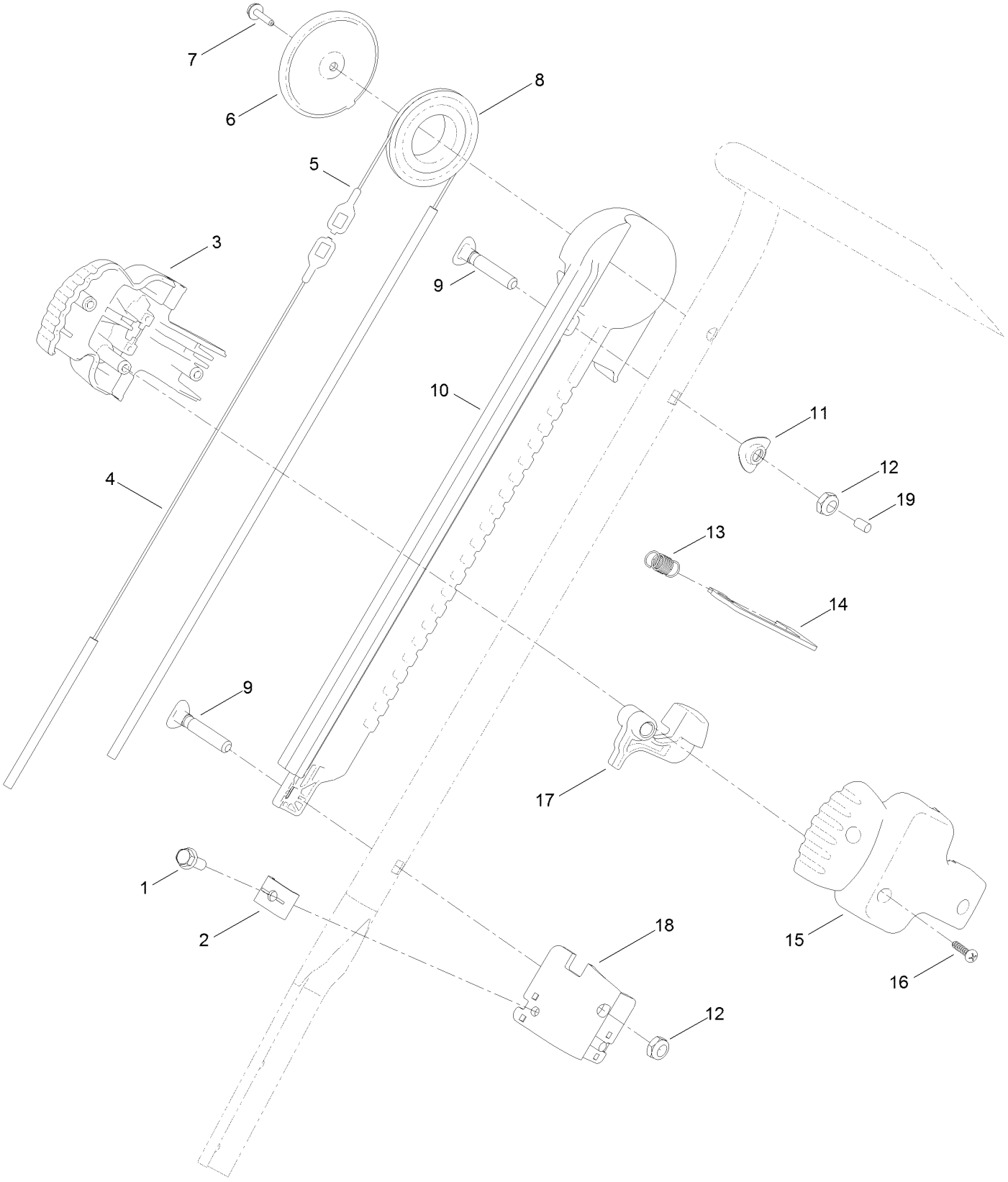

Handle Chute Control Assembly (continued)

Ref.	Part Number	Qty.	Description
1	32144-85	2	Screw-HWH
2	106-7297	2	Clamp-Cable
3	108-4912	1	Handle-Slider, RH
4	108-4897	1	Cable-Chute, Short
5	108-4898	1	Cable-Chute, Long
6	108-4931	1	Cover-Pulley
7	98-1375	1	Screw-HWH
8	108-4907	1	Pulley-Slider
9	107-3018	2	Screw-Handle
10	108-4899	1	Track-Slider
11	107-3844	1	Washer
12	3296-47	2	Nut-Lock, NI
13	108-4914	1	Spring-Trigger
14	108-4908	1	Plate-Lock, Chute
15	108-4911	1	Handle-Slider, LH
16	94-4496	3	Screw-PPH
17	108-4913	1	Trigger
18	108-4909	1	Bracket-Cable
19	125-7943	1	Cap-Thread, Screw

Attachments and Accessories

For 38567 CCR 6053 R Quick Clear Snowthrower

Product Name	Model/Part
High-Altitude Kit	121-4240
Long Life Rotor Blade Kit	38205
Paddle Replacement Kit	38261
Case of 24 20-Ounce Bottles 5W30 Winter Oil	38908
Toro Snow Oil 0W30 Synthetic 20-Ounce Bottle	38913

Notes:



Count on it.