Form No. 3315–596

Flow Combining Kit

Groundsmaster® 580–D

Model No. 30586

Installation Instructions

Note: If a front–mounted implement, such as a broom or snowthrower, is used with the Groundsmaster 580–D, the Flow Combining Kit must be installed on the machine. The Flow Combining Kit lets you direct all the oil flow to the front implement by shutting off the flow of oil to the wing units. Complete oil flow to the front implement is required to assure the implement gets maximum power.

Remove the Rear Panel and the Battery

1. Park the machine on a level surface, lower all the cutting units, shut the off and engage the parking brake
2. Open the hood and prop it up. Unlatch and remove the left and right engine panels.

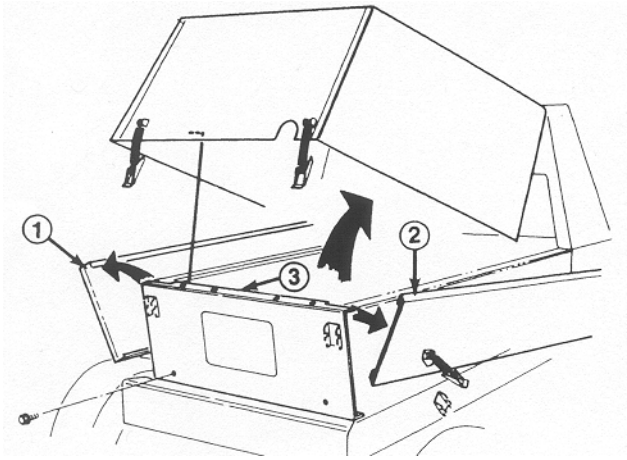

Figure 1

1. Left engine panel
2. Right engine panel
3. Rear panel

3. Remove the (6) flangehead screws securing the rear panel to the frame (Fig. 1). Set the rear panel aside.
4. Remove the (2) flangehead screws retaining the battery tray to the battery base (Fig. 2). Slide the battery tray out to the side. This gives you more space to work on the hydraulic system.

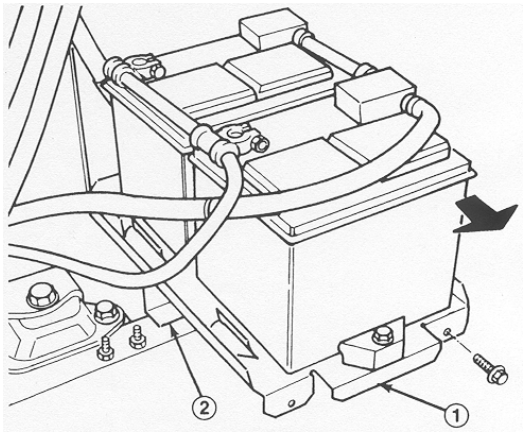

Figure 2

1. Battery tray
2. Battery base

Drain the Oil from the Pump and Remove the Elbows

1. Put an oil pan below the fixed tandem oil gear pump.
2. Disconnect the hoses from the fittings on the right front and the rear of the pump (Fig. 3). Also, disconnect the right front hose, which is not needed, from the straight fitting on the PTO manifold (Fig. 3).

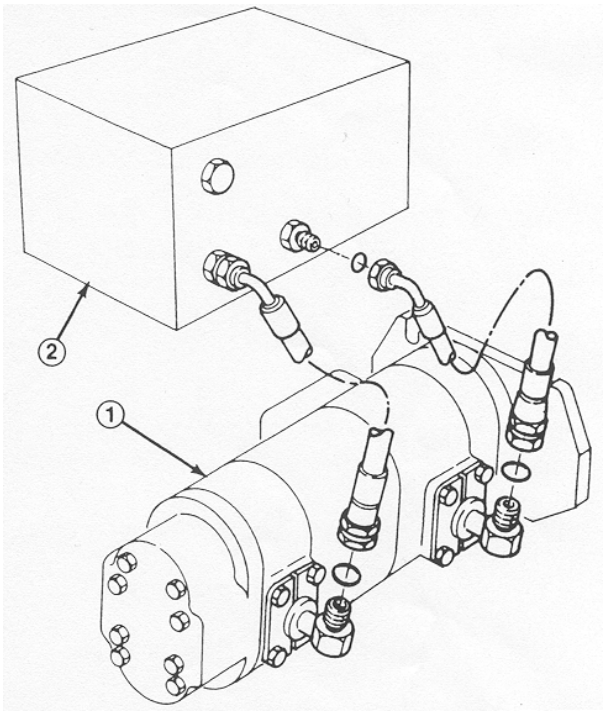

Figure 3

1. Pump
2. PTO Manifold

© 2005 by The Toro Company
8111 Lyndale Avenue South
Bloomington, MN 55420-1196

All Rights Reserved
Printed in the USA

3. Remove the 90 degree fitting from the right front and the rear of the pump because they will not be used (Fig. 4). However, the two–piece mounting flange that held the rear fitting to the pump will be used later. The other two–piece mounting flange will not be used.

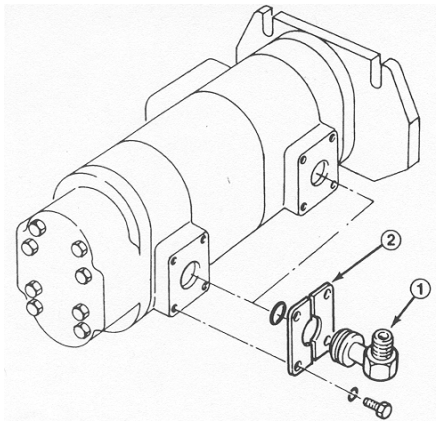

Figure 4

1. 90 degree fitting
2. Mounting flange

Install the Flow Combining Valve

1. The flow combining valve (Fig. 5) has an arrow marked on its upper right side. With the arrow pointing up, install the 90 degree fitting and the O–ring into the rear port on the valve. Also, install the straight fitting and the O–ring into the front port on the valve.

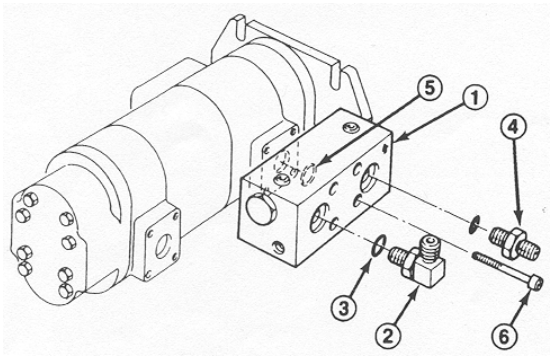

Figure 5

1. Flow combining valve
2. 90 degree fitting
3. O–ring
4. Straight fitting
5. O–ring
6. Socket head capscrew

Note: The 90 degree fitting may need a slight adjustment when the hydraulic hose is eventually installed.

2. Mount the flow combining valve to the front port, on the side of the pump, with a O–ring and (4) socket head capscrews. the arrow on the valve must point up to assure proper installation.

Install the Fittings and U–Shaped Hydraulic Tube

1. Install the T–fitting and the O–ring in the port at the left rear of the pump, using existing two–piece mounting flange, (4) lockwashers and capscrews (Fig. 6).

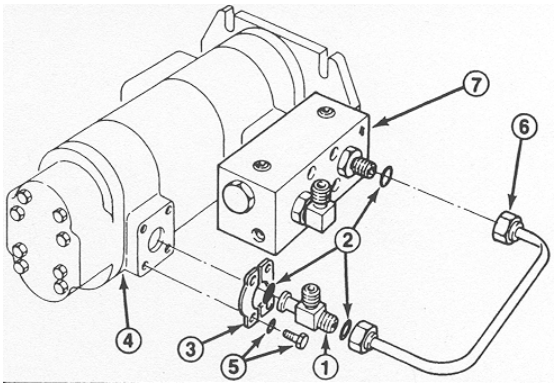

Figure 6

1. T–fittings
2. O–rings
3. Mounting flange
4. Pump
5. Capscrew/lockwasher
6. Hydraulic tube
7. Flow combining valve

2. Connect the U–shaped hydraulic tube and the O–rings to the end of the T–fitting and the straight fitting at the front of the flow combining valve (Fig. 6).

3. Remove the bottom right plug from the end of the flow combiner. Install the 90 degree fitting and the O–ring into the port (Fig. 7).

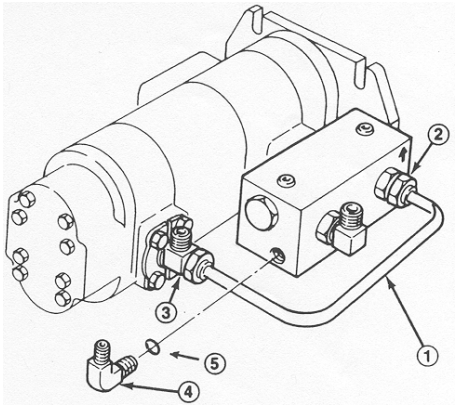

Figure 7

1. Hydraulic tube
2. Straight fitting
3. T–fitting
4. 90 degree fitting
5. O–ring

Note: The 90 degree fitting may need a slight adjustment when the hydraulic hose is eventually installed.

4. Install the 90 degree fitting and the O–ring into the top left rear port in the PTO manifold (Fig. 8).

5. Assemble the regulator valve, 90 degree swivel fitting, straight fitting and O–rings (Fig. 8).

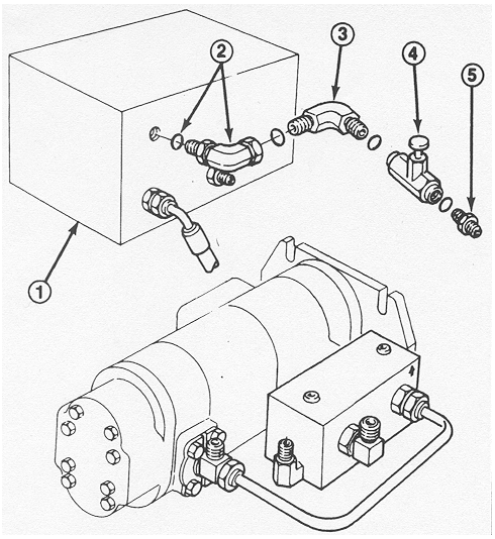

Figure 8

1. PTO manifold
2. 90 fitting w/o–ring
3. 90 fitting w/o–ring
4. Regulator valve w/o–ring
5. Straight fitting w/o–ring

6. Screw the swivel fitting into the 90 degree fitting, installed in step 2 (Fig. 8).

Connect the Hydraulic Hoses

Note: After the hydraulic hoses are installed, it may be necessary to slightly adjust each fitting.

1. Connect hose “A” and the O–rings to the regulator valve and to the 90 degree fitting at the rear end of the flow combining valve.

2. Connect hose “B” and the O–rings to the 90 degree fittings on the end of the flow combining valve and the straight fitting on the PTO manifold.

3. Connect the existing hose “C” and O–rings from PTO manifold to the top of the T–fitting at the rear of the pump.

Install Metal Tag and Decals

1. Affix the warning decal to one side of the metal tag and the operating decal to the other side. Install the metal tag to the flow combining regulator with a cable tire (Fig. 9).

2. Affix the warning decal to the center of the front frame below the steering tower.

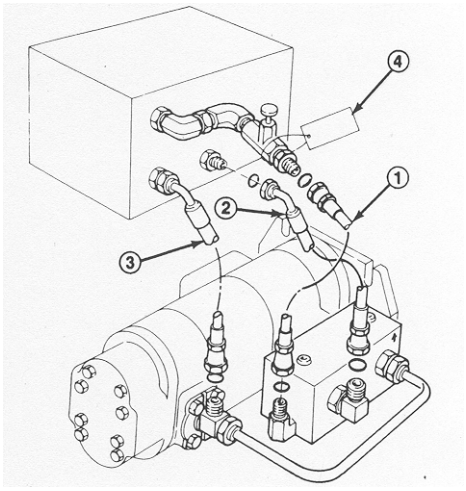

Figure 9

1. Hose “A”
2. Hose “B”
3. Hose “C”
4. Metal tag w/decals

Install the Flow Control Valve

The purpose of the flow control valve is to regulate the rate at which the front implement is lowered.

1. Disconnect and remove the hydraulic tube secured to the tank return and the lift cylinder bulkhead fittings (Fig. 10).

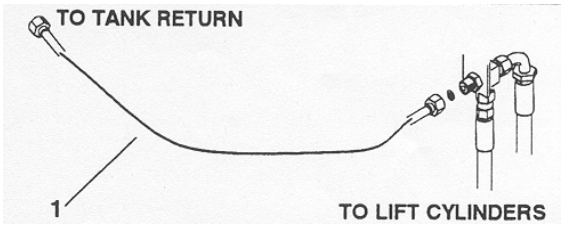

Figure 10

1. Old hydraulic tube

2. Assemble the hydraulic fittings to the flow control valve (Fig. 11).

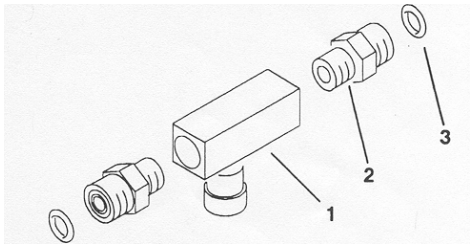

Figure 11

1. Flow control valve
2. Fitting (2)
3. O–ring

3. Loosely secure the new hydraulic tube assembly to the flow control valve (Fig. 12). The arrow on the flow control must point in the direction of the tube to the tank return.

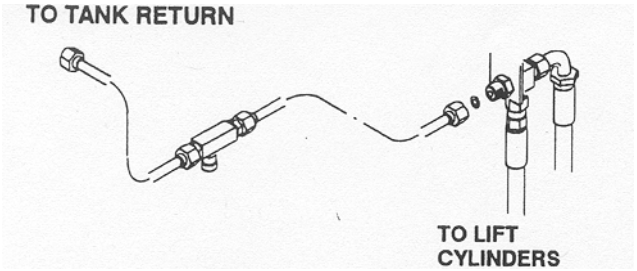

Figure 12

Note: Make sure all O–rings are properly positioned when making connections (Fig. 11).

4. Tighten all connections.

Check the Hydraulic System

1. If all three cutting units are still on the machine, make sure to completely close the flow combining valve.
2. Make sure all hydraulic fittings are tight.

Danger

Keep body and hands away from pin hole leaks or nozzles that elect high pressure hydraulic fluid. Use cardboard or paper, not hands, to search for all leaks. Highly pressurized hydraulic fluid that is escaping can penetrate skin and cause serious injury. If fluid is accidentally injected into the skin, it must be surgically removed within a few hours by a doctor familiar with this type of injury, otherwise gangrene may occur.

3. Start the engine, lower the cutting units and engage the deck drive/PTO switch. All cutting units should be operating at the same speed. If the side cutting units are not operating, disengage switch immediately and assure that the flow combining valve is completely closed.
4. With the engine running and all other controls disengaged, check for leaks around the newly installed hydraulic parts.
5. After checking for leaks, shut the engine off.

Operating Instructions

The Flow Combining Kit, by means of an in–line regulator valve between the flow combiner and the manifold, controls the flow of oil to the front and side hydraulic motors.

1. **Using a front–mounted Implement** – Attachments, such as snowthrowers and brooms that are powered by the front hydraulic motor, require maximum oil flow to operate properly. To assure maximum oil flow to the front hydraulic motor and attachment, turn the regulator valve counterclockwise until it is completely open to combine flow.
2. **Using three cutting units** – Three cutting units attached to the hydraulic motors require equal oil flow and power so the blades operate at the same speed. To separate flow and assure equal oil flow to all three hydraulic motors, turn regulator valve clockwise until it is completely closed.

Caution

If the flow combining regulator valve is accidentally allowed to remain open:

- **the front cutting unit blades will spin excessively fast and be very noisy**
- **the side cutting units will not engage.**

Failure to close the regulator valve may result in serious injury to the operator of the machine, and/or bystanders, especially from thrown objects. Whenever you notice the blades spinning excessively fast, disengage the deck drive/PTO switch immediately. Then have a qualified mechanic close the regulator valve before you resume operating the cutting units.

3. **Adjusting the Implement Drop Rate (Flow Control Valve)** – Rotate the flow control knob 1/4 turn counterclockwise, if front implement is dropping too slow or 1/4 turn clockwise it front implement is dropping too fast.

Note: Allow hydraulic oil to reach full operating temperature before adjusting flow control valve.

Important **DO NOT CLOSE VALVE COMPLETELY!** Doing so will restrict fluid flow and prevent front implement from being lowered.