FORM NO. 3315–770 Rev. A

TORO®

MODEL NO. 03420–30001 & UP
MODEL NO. 03425–30001 & UP

OPERATOR'S MANUAL

REELMASTER 216–D

Traction Units

To assure maximum safety, optimum performance, and to gain knowledge of the product, it is essential that you or any other operator of the mower read and understand the contents of this manual before the engine is ever started. Pay particular attention to the SAFETY INSTRUCTIONS highlighted by this symbol.

The safety alert symbol means CAUTION, WARNING or DANGER – personal safety instruction. Failure to comply with the instruction may result in personal injury.

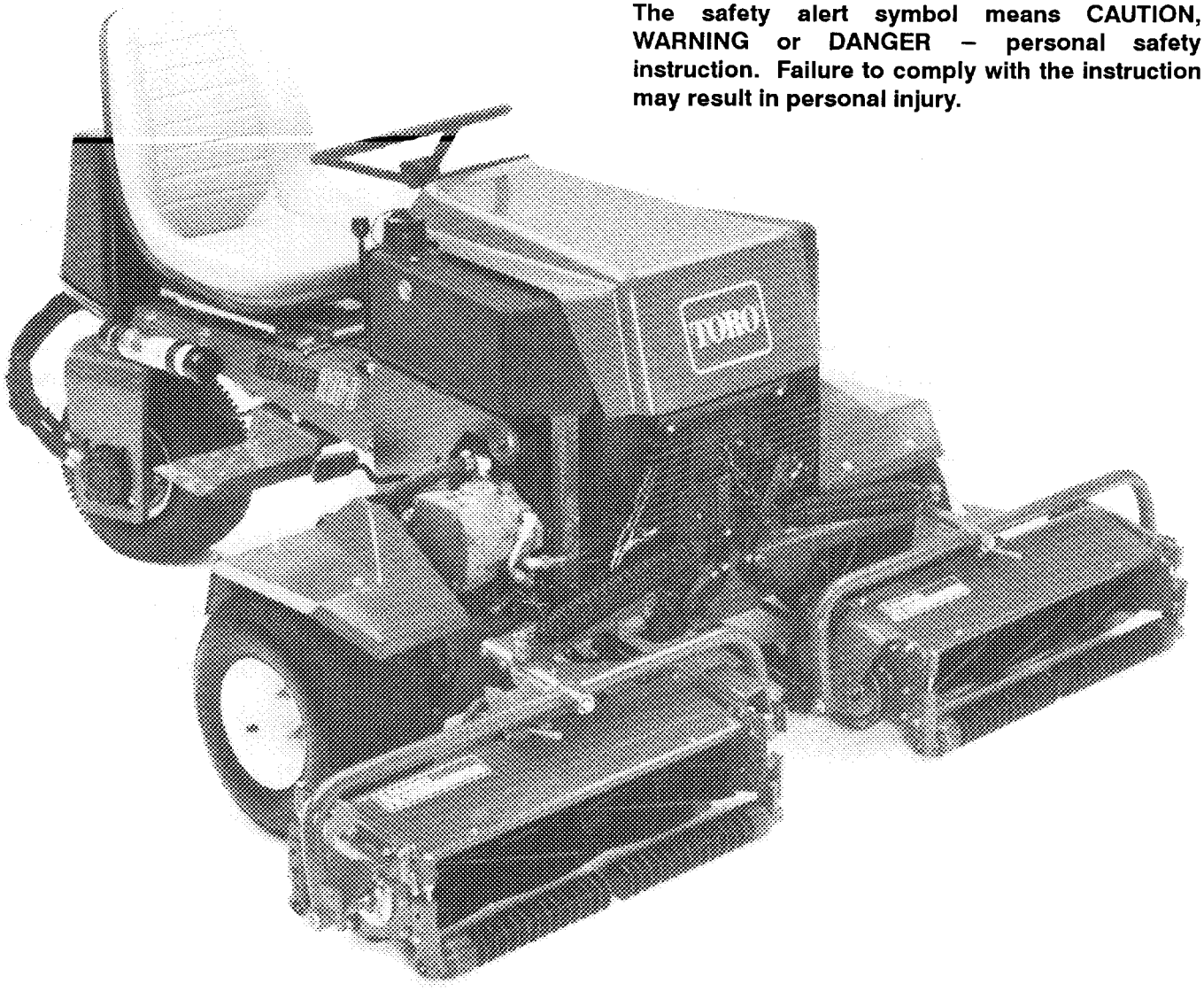

© The TORO COMPANY – 1992

FOREWORD

Your new REELMASTER 216-D was developed to provide an efficient, reliable and time-saving method of mowing high quality turf. The latest concepts in engineering and design have been incorporated into this machine along with the highest quality parts and workmanship. Excellent service will be derived if proper operation and maintenance practices are followed.

We know, since you have purchased the industry leader in mowing excellence, that future performance and dependability are of prime importance. TORO also is concerned about future use of the machine and of the safety to the user. Therefore, this manual should be read by you and those involved with the REELMASTER 216-D to ensure that safety, proper set-up, operation and maintenance procedures are followed at all times. The major sections of the manual are:

1. Safety Instructions
2. Set-up Instructions
3. Before Operating Instructions
4. Operating Instructions
5. Maintenance

Safety, mechanical and some general information in this manual is emphasized. DANGER, WARNING and CAUTION identify safety messages. Whenever the triangular safety alert symbol appears, A it is followed by a safety message that must be read and understood. For more complete details concerning safety, read the safety instructions on pages 4 and 5. IMPORTANT identifies special mechanical information and NOTE identifies general information worthy of special attention.

OPTIONAL SPARK ARRESTER

In some places a spark arrester muffler must be used because of local, state or federal regulations. The spark arrester available from your local Toro Distributor is approved by the United States Department of Agriculture and the United States Forest Service.

When the mower is used or operated on any California forest, brush or grass covered land, a properly operating spark arrester must be attached to the muffler. The operator is violating state law, Section 442 Public Resources Code if a spark arrester is not used.

Whenever you have questions or need service, contact your local authorized Toro Distributor. In addition to having a complete line of accessories and professional turf care service technicians, the distributor has a complete line of genuine TORO replacement parts to keep your machine operating properly. Keep your TORO all TORO. Buy genuine TORO parts and accessories.

TABLE OF CONTENTS

Page

SAFETY INSTRUCTIONS 4–5
- Before Operating 4
- While Operating 4
- Maintenance 5

SAFETY INSTRUCTIONS & DECALS 6
SPECIFICATIONS 7
LOOSE PARTS CHART 8
SET-UP INSTRUCTIONS 9–16
- Install Rear Wheel 9
- Install Steering Wheel 9
- Installing Seat 9
- Install Front Pivot Rods 10
- Mount Front Roller 10
- Set Height–of–Cut and Level Rear Roller .. 11
- Adjust Bedknife Parallel To Reel 11
- Verify Height–of–Cut Setting 12
- Mount Cutting Units 12
- Install Cutting Unit Drive Belts 13
- Install Belt Tensioners To Cutting Units 13
- Adjust Pulley Cleaners 13
- Install Counterbalance Springs 14
- Add Rear Ballast 15
- To Install Rear Weight 15
- Activate and Charge Battery 15

BEFORE OPERATING 16–18
- Check Crankcase Oil 16
- Fill Fuel Tank 17
- Check Cooling System 17
- Check Hydraulic System Fluid 18
- Inspect Fuel Filter 18

CONTROLS 19–20
OPERATING INSTRUCTIONS 21–24
- Starting/Stopping Engine 21
- Bleeding Fuel System 21

Page

- Bleeding Cooling System 22
- Check Operation of Interlock Switches 22
- Adjust Steering Column 22
- Towing Traction Unit 23
- Training Period 23
- Before Mowing 23
- Operating Characteristics 23
- Transport Operation 23
- Inspection and Clean–Up After Mowing 24
- Cutting Unit Characteristics 24
- Cutting Unit Daily Adjustments 24

LUBRICATION 24–25
MAINTENANCE 26–32
- Hood Removal 26
- Servicing Air Cleaner 26
- Cleaning Radiator and Screen 27
- Changing Crankcase Oil 27
- Changing Hydraulic System Fluid and Filter . 28
- Replacing Fuel Filter 28
- Adjusting Transmission For Neutral 29
- Belt Adjustments 29
- Adjusting Steering Stops 30
- Adjusting Traction Pedal 30
- Hand Brake Adjustment 31
- Adjust Hood Latch 31
- Battery Care 31
- Battery Storage 32
- Backlapping Cutting Units 32

IDENTIFICATION AND ORDERING 32
HYDRAULIC SCHEMATIC 33
ELECTRICAL SCHEMATIC 34
SLOPE CHART 35
THE TORO PROMISE ..... Back Cover

SAFETY INSTRUCTIONS

Improper use or maintenance by the operator or owner of the machine can result in injury. To reduce the potential for any injury, comply with the following safety instructions.

WARNING: Engine exhaust contains carbon monoxide which is an odorless, deadly poison. Carbon monoxide is also known to the State of California to cause birth defects. Do not run engine indoors or in an enclosed area.

BEFORE OPERATING

1. Operate the machine only after reading and understanding the contents of this manual. A free replacement manual is available by sending complete model and serial number to: The Toro Company, 8111 Lyndale Ave. S., Minneapolis, MN 55420.

2. Only trained operators, skilled in slope operation and who have read this manual should operate the machine. Never allow children to operate the machine or adults to operate it without proper instructions.

3. IMPORTANT: Always use proper rear ballast as specified in this manual; see Rear Ballast, page 15.

4. Become familiar with the controls and know how to stop the machine and engine quickly.

5. Do not carry passengers on the machine. Keep everyone, especially children and pets, away from the areas of operation.

6. Keep all shields, safety devices and decals in place. If a shield, safety device or decal is damaged, malfunctioning or illegible, repair or replace it before operating the machine.

7. Always wear substantial shoes. Do not operate machine while wearing sandals, tennis shoes or sneakers. Do not wear loose fitting clothing because it could get caught in moving parts and possibly cause personal injury.

8. Wearing safety glasses, safety shoes, long pants and a helmet is advisable and required by some local ordinances and insurance regulations.

9. Make sure the work area is clear of objects which might be picked up and thrown by the reels.

10. Fill fuel tank with diesel fuel before starting engine. Avoid spilling any fuel. Since fuel is highly flammable, handle it carefully.

A. Use an approved fuel container.

B. Do not remove cap from fuel tank when engine is hot or running.

C. Do not smoke while handling diesel fuel.

D. Fill fuel tank outdoors and not over one inch from the top of the tank, (bottom of the filler neck). Do not overfill.

WHILE OPERATING

11. Do not run the engine in a confined area without adequate ventilation. Exhaust fumes are hazardous and could be deadly.

12. Sit on the seat when starting and operating the machine.

13. Check interlock switches daily for proper operation (Refer To Checking Interlock Switches, Page 22). Do not rely entirely on safety switches -shut off engine before getting off seat. If a switch fails, replace it before operating the machine. The interlock system is for your protection, so do not bypass it. Replace all interlock switches every two years.

14. When starting the engine:

A. Engage parking brake.

B. Be sure traction pedal is in neutral and reel drive is in disengage position.

C. After engine starts, release parking brake and keep foot off traction pedal. Machine must not move. If movement is evident, the neutral control linkage is incorrectly adjusted: therefore, shut engine off and adjust until machine does not move when traction pedal is released. Refer to Adjusting Transmission for Neutral, page 29.

D. Hills over 15 degrees should be mowed up and down, not side to side; see slope gauge, page 35.

E. Mowing hills may be dangerous. However, hills over 20 degrees generally should not be mowed unless special safeguards, skills and conditions exist; see slope gauge, page 35.

F. Stay alert for holes in terrain and other hidden hazards. Use extreme care when operating close to sand traps, ditches, creeks, steep hillsides or other hazards.

G. Reduce speed when making sharp turns. Avoid sudden stops and starts. Use reverse pedal for braking. Cutting units must be lowered when going down slopes for steering control.

H. Before backing up, look to the rear and assure no one is behind the machine. Watch out for traffic when near or crossing roads. Always yield the right of way.

15. Keep hands, feet and clothing away from moving parts and the reel discharge area. Grass baskets, if so equipped, must be in place during reel operation for maximum safety.

16. Raise the cutting units when driving from one work area to another.

SAFETY INSTRUCTIONS

17. Do not touch engine, muffler, exhaust pipe or hydraulic tank while engine is running or soon after it has stopped because these areas could be hot enough to cause burns.

18. If a cutting unit strikes a solid object or vibrates abnormally, stop immediately. Turn engine off, wait for all motion to stop and inspect for damage. A damaged reel or bedknife must be repaired or replaced before operation is continued.

19. Before getting off the seat:

A. Move traction pedal to neutral.

B. Set the parking brake.

C. Disengage the cutting units and wait for the reels to stop spinning.

D. Stop the engine and remove key from the ignition switch.

20. Whenever machine is left unattended, make sure reels are not spinning, key is removed from ignition switch and parking brake is set.

MAINTENANCE

21. Before servicing or making adjustments to the machine, stop the engine and remove key from switch to prevent accidental starting of the engine.

22. Check performance of all four interlock switches daily. Do not defeat interlock system. It is for your protection.

23. To ensure entire machine is in good operating condition, frequently check and keep all nuts, bolts, screws and hydraulic fittings tight.

24. Make sure all hydraulic line connectors are tight, and all hydraulic hoses and lines are in good condition before applying pressure to the system.

25. Keep body and hands away from pin hole leaks or nozzles that eject hydraulic fluid under high pressure. Use paper or cardboard, not hands, to search for leaks. Hydraulic fluid escaping under pressure can have sufficient force to penetrate skin and do serious damage. If fluid is injected into the skin it must be surgically removed within a few hours by a doctor familiar with this form of injury or gangrene may result.

26. Before disconnecting or performing any work on the hydraulic system, all pressure in system must be relieved by stopping engine and lowering cutting units to the ground.

27. If major repairs are ever needed or if assistance is desired, contact an Authorized Toro Distributor.

28. To reduce potential fire hazard, keep the engine area free of excessive grease, grass, leaves and accumulation of dirt.

29. If the engine must be running to perform a maintenance adjustment, keep hands, feet, clothing, and any other parts of the body away from the cutting units and any moving parts. Keep everyone away.

30. Do not overspeed the engine by changing governor settings. To assure safety and accuracy, have an Authorized Toro Distributor check maximum engine speed with a tachometer.

31. Engine must be shut off before checking oil or adding oil to the crankcase.

32. To insure optimum performance and safety, use genuine TORO replacement parts and accessories. Replacement parts and accessories made by other manufacturers could be dangerous, and such use could void the product warranty of The Toro Company

SAFETY AND INSTRUCTION DECALS

The following safety and instruction decals are affixed to the traction unit. If any decal becomes illegible or damaged, install a new decal. Part numbers are listed below and in your Parts Catalog. Order replacements from your Authorized Toro Distributor.

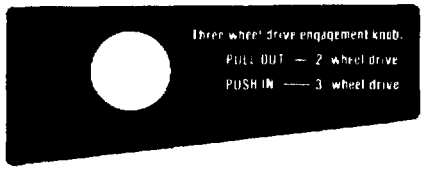

ON LEFT SIDE OF SEAT PANEL
(Part No. 80-4220)
Model 03425

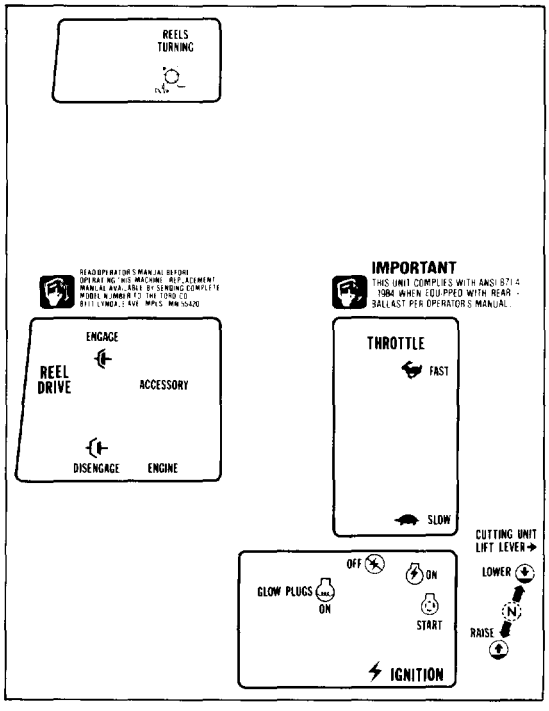

ON INSTRUMENT PANEL
(Part No. 83-8180)

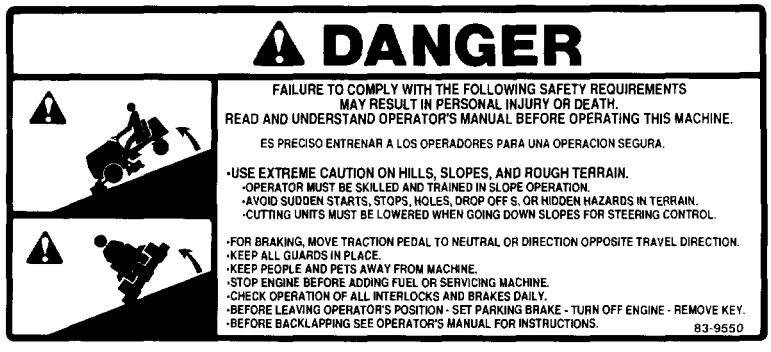

ON SKIRT PANEL
(Part No. 83-9550)

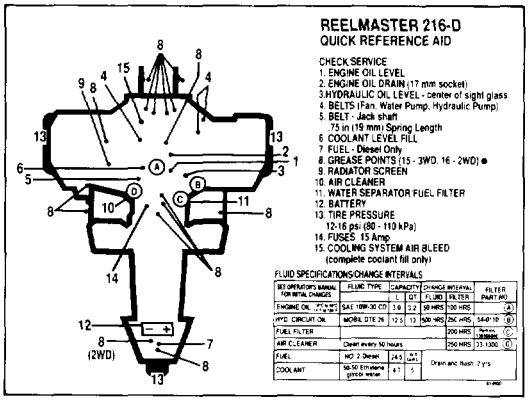

ON SKIRT PANEL
(Part No. 83-8900)



ON INSIDE OF
FRONT RIGHT PANEL
(Part No. 67-5360)



ON CONTROL PANEL
(Part No. 83-9150)



ON CUTTING UNIT SHIELD
(Part No. 62-5070)



ON LIFT ARMS
(Part No. 55-4300)

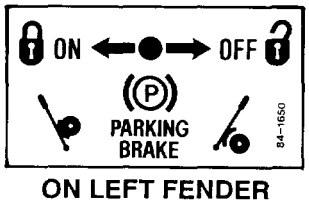

ON LEFT FENDER
(Part No. 84-1650)



ON FAN SHROUD
(Part No. 77-3100)

SPECIFICATIONS

Engine: Perkins, 4 cycle, 3 cylinder, liquid cooled, vertical overhead valve, diesel engine with centrifugal water pump. 16.5 hp governed to a maximum speed of 3200 rpm. 37.60 cu. in. displacement. Forced lubrication gear pump. Mechanical fuel transfer pump. Fuel filter/water separator with replaceable filter element. Heavy duty remote mounted air cleaner.

Radiator: Side mounted radiator, industrial construction. Cooling system capacity is 5-1/4 quarts.

Electrical: 12 volt starter. Interlock switches. 14 amp alternator with remote electronic regulator rectifier.

Fuel Capacity: 6.5 gallons.

Traction Drive: Hydrostatic drive; variable displacement pump, infinitely variable in both forward and reverse direction. High torque hydraulic wheel motors.

Hydraulic Oil Capacity/Filter: Remote mounted, 2.3 gallon oil reservoir. 3.3 gallon total system capacity. 10 micron remote mounted spin on filter.

Ground Speed: Infinitely variable speed selection in forward and reverse

Mowing speed: 0-5 mph
Transport speed: 0-8 mph
Reverse speed: 0-3 mph

Tires/Wheels: Two front traction tires, 18 x 8.50 - 8, tubeless, 4 ply rating. Rear steering tire 18 x 6.50 - 8 ,4 ply tire with tube. Recommended tire pressure 12-16 psi.

Frame: Frame consists of formed steel, welded steel and steel tubing components.

Model 03420: Tricycle vehicle with 2-wheel traction drive in front and rear wheel steering.
Model 03425: Tricycle vehicle with 3-wheel traction drive and rear wheel steering.

Steering: Adjustable steering wheel. Pinion gear and sector gear with solid drag link to rear steer wheel arm.

Brakes: Service braking accomplished through dynamic characteristics of hydrostat. Parking or emergency brake is actuated by ratchet hand lever.

Controls: Foot operated traction pedal and traction pedal stop. Hand operated throttle, ignition switch, reel engagement switch, cutting unit lift lever and parking brake. Model 03425 only: 2 or 3 wheel drive selector valve.

Gauges and Protective Systems: Hour meter, temperature gauge. 4 light warning cluster gauge: oil pressure, water temperature, amps and glow plug. High water temperature shut-down.

Cutting Unit Lift: Hydraulic lift with automatic reel shut off.

Overall Dimensions:

Wheel tread width:	54"
Wheel base:	55"
Width:	81"
Length:	92"
Height:	43"
Weight:	
Model 03420	1205 lb. w/ 5 bld. cutting unit.
Model 03425	1235 lb. w/ 5 bld. cutting unit.

Optional Equipment:

Full Roller Kit	Model No. 03440
Sectional Roller Kit	Model No. 03445
Wiehle Roller Kit	Model No. 03450
Skid Kit	Model No. 03446
Anti-Scalp Kit	Model No. 03447
Grass Basket Kit	Model No. 03433
Roller Scraper Kit	Part No. 60-9560
Comb Kit	Part No. 67-9400
Large Pulley Kit	Part No. 67-9540
Rear Weight Kit	Part No. 83-9370
Seat Weight Kit	Part No. 80-4210
Gauge Bar Kit	Part No. 13-8199

LOOSE PARTS CHART

Note: Use this chart as a checklist to assure all parts necessary for assembly have been received. Without these parts, total set-up cannot be completed. Some parts may have already been assembled at factory.

Wheel Assy Spacers Flat washers Castor Axle Locknut	1 2 2 1 1	Install rear wheel on model 03420.
Wheel Assy. Lug Nuts	1 4	Install rear wheel on model 03425.
Roll Pin	1	Mount steering wheel.
Pivot Rod Capscrews—5/16– 18 x 7/8"Lg. Lockwashers	2 2 2	Install to Front Lift Arms.
Thrust Washers Flat Washer Flange Head Capscrew	3 3 3	Mount cutting Units to Lift Arms.
Capscrew Spacer Washer Nut	4 4 8 4	Install Belt Tension Rod to Cutting Unit (Fixed Cutting Units only).
V–Belt	2	Install to Jackshaft Pulley and Reel Pulley.
Spring Vinyl Sleeve Chain Spring Shackle Clevis Pin Cotter Pin	3 1 1 3 6 6	Install Counterbalance Springs.
Key	2	
Hydraulic Reservoir Plug	1	
Operators Manual Parts Catalog Registration Card	2 1 1	Read Before Operating Machine. Fill out and send to the Toro Co.

Specifications and design subject to change without notice.

SET-UP INSTRUCTIONS

INSTALL REAR WHEEL (Fig. 1 & 2)

Model 03420 – Two wheel drive

1. Mount wheel assembly to rear castor fork with (2) spacers, (2) flat washers, castor axle and locknut. Spacers to be positioned on inside of fork and washers outside of fork. Torque nut to 45–65 ft–lb.

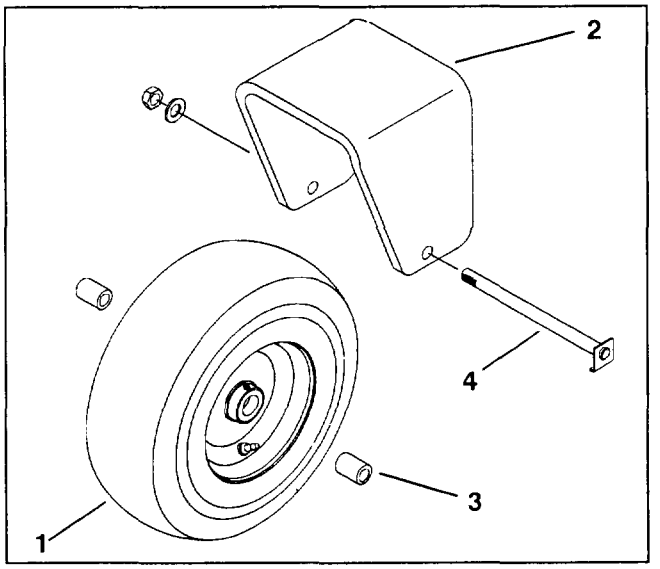

Figure 1

1. Wheel assembly
2. Rear castor fork
3. Spacer (2)
4. Castor axle

Model 03425 – Three wheel drive

1. Mount wheel assembly onto rear wheel hub.

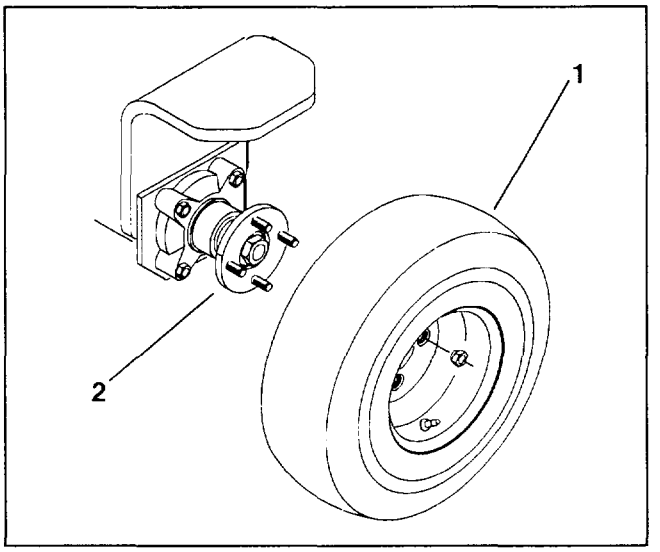

Figure 2

1. Wheel assembly
2. Rear wheel hub

2. Install lug nuts and torque to 45–65 ft–lb.

INSTALL STEERING WHEEL (Fig. 3)

1. Move rear wheel so it points straight ahead.

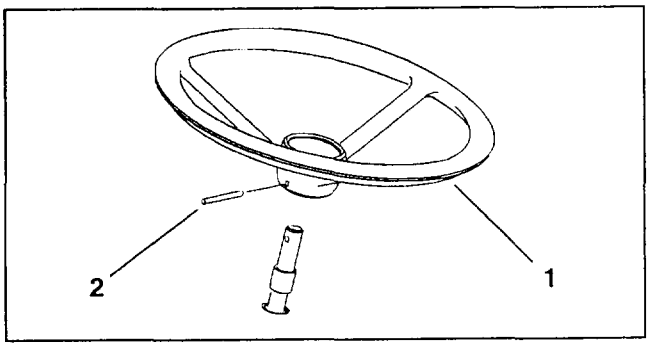

Figure 3

1. Steering wheel
2. Castor axle

2. Slide steering wheel onto steering shaft aligning mounting holes.

3. Secure steering wheel in place with roll pin.

INSTALLING SEAT (Fig. 4–5)

The Reelmaster 216–D is shipped without the seat assembly. Deluxe Seat Kit, Model 30797 or Standard Seat Kit, Model 30796, must be installed as follows:

1. Remove shipping ties securing lower seat slides to upper seat slides. Note orientation of lower slides for correct reinstallation.

2. On Deluxe Seat, remove machine screws securing upper slides to seat bottom. Move seat slides inward to next set of mounting holes and resecure with machine screws and (4) M8 locknuts. Apply Loctite to fasteners.

3. Insert lower slides onto upper slides.

4. Loosely secure slides to seat plate with fasteners supplied with seat.

Note: Mount seat in forward holes to attain forward adjustment.

5. Tighten flange nuts and check operation of seat.

Note: For operators that are lightweight, (less than 150 pounds) and short in stature (less than 5'4" tall), an optional weight kit (Toro part no. 80–4210) for seat model 30796 is available from your Authorized Toro Distributor. Mount weight to top of seat plate with (2) capscrews and flange nuts as shown in Figure 5. When using weight, seat slide adjusters should be mounted in the forward set of holes provided in seat plate to insure seat can be positioned forward enough to provide comfortable operation and control of the mower.

SET-UP INSTRUCTIONS

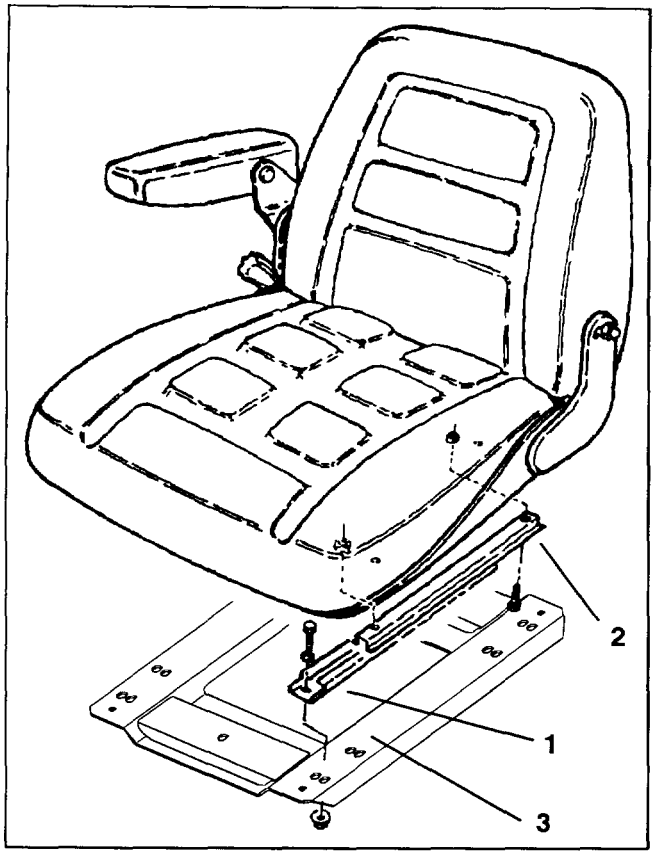

Figure 4
1. Lower seat slide
2. Upper seat slide
3. Seat plate

Important: Do not use weight with any other seat as it may cause interlock system to malfunction.

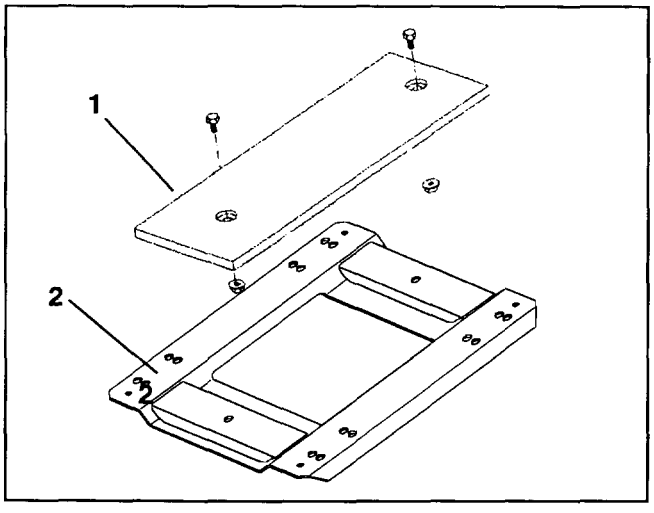

Figure 5
1. Seat weight
2. Seat plate

INSTALL FRONT PIVOT RODS (Fig. 6)

1. Insert a pivot rod into each lift arm and align mounting holes.

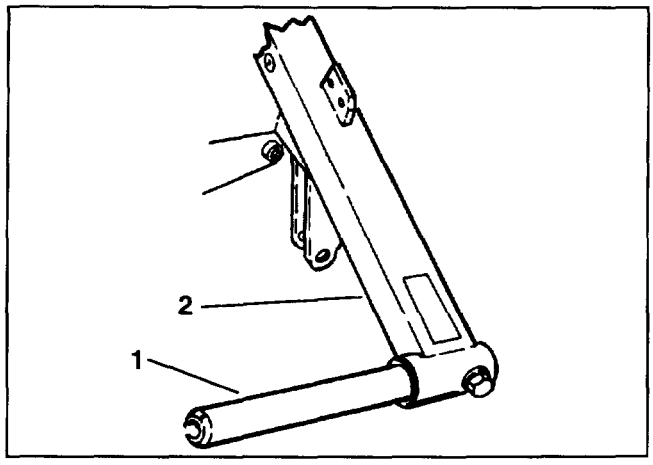

Figure 6
1. Pivot rod
2. Lift arm

2. Secure a pivot rod to each lift arm with a 5/16 – 18 x 7/8" Lg. capscrew and lock washer.

MOUNT FRONT ROLLER (Fig. 7) (Floating Cutting Unit)

1. Remove (2) locknuts securing each angle bracket to cutting unit.

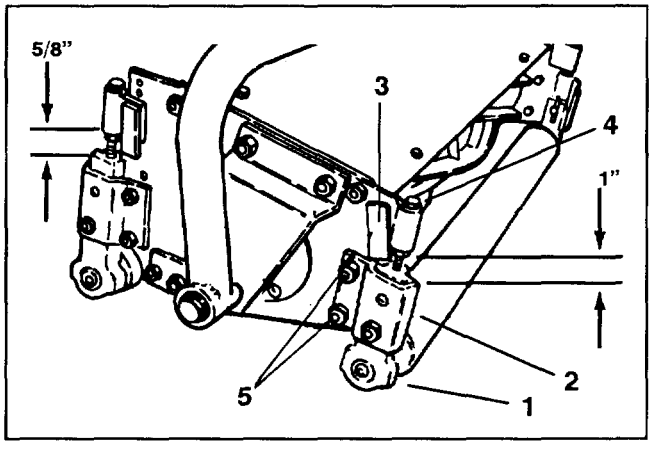

Figure 7
1. Roller bracket
2. Angle bracket
3. Height–of–cut pin
4. Support capscrew
5. Locknuts

2. Remove height–of–cut pins.

3. Insert smaller dia. shaft end of roller into white bushing in roller bracket, making sure flanged end of nylon bushing faces inside toward roller. **Hex of roller bracket must mate with hex of nut adjustment.**

4. Press roller bracket onto other shaft end of roller. **Hex of roller bracket must mate with hex of nut adjustment.**

5. Hold one roller bracket stationary and use other bracket as a wrench to loosen or tighten bearing clearance to allow roller to rotate freely and to eliminate bearing end play.

SET-UP INSTRUCTIONS

6. Roller brackets must be aligned for installation onto cutting unit. If necessary to align after bearing adjustment, remove roller bracket on side with flanged nyliner, align with opposite roller bracket within ± one hex flat and replace.

7. Reinstall Height–of–Cut pins.

8. Reinstall (2) locknuts securing each angle bracket to cutting unit.

SET HEIGHT OF CUT AND LEVEL REAR ROLLER (Fig. 7) (Floating Cutting Unit)

1. Position cutting unit on a flat level table or board.

2. Slightly loosen (crack) nut securing each roller bracket to angle bracket.

3. Adjust support capscrew to achieve 1" ± 1/16 dimension between Height–of–Cut support and *front* roller bracket (2 places).

4. Adjust support capscrew to achieve 5/8" ±1/16 dimension between Height–of–Cut support and *rear* roller bracket (2 places).

5. Remove hairpin cotters securing *rear* Height–of–Cut pins and reinstall in the 1/2" setting as indicated on Height–of–Cut plate.

6. Remove hairpin cotters securing front Height–of–Cut pins and reinstall in the 1/4" setting as indicated on Height–of–Cut plate to allow clearance between roller and table.

7. Position a 1/2" or thicker bar under the reel blades and against the front face of the bedknife. Make sure bar covers the full length of reel blades.

8. Verify if rear roller is level, by inserting a piece of paper under each end of roller.

9. Level roller by adjusting appropriate support capscrew on rear roller supports until roller is parallel and entire length of roller contacts table.

10. When roller is level, adjust both rollers to desired Height–of–Cut pins. **Tighten nuts securing roller brackets.**

SET HEIGHT–OF–CUT AND LEVEL REAR ROLLER (Fig. 8) (Fixed Cutting Units)

1. Position cutting unit on flat level surface or board.

2. Slightly loosen (crack) nuts securing roller brackets to angle brackets.

3. Adjust support capscrews to achieve 5/8"± 1/16 " dimension between Height–of–Cut support and roller bracket (2 places).

4. Remove hairpin cotters securing Height–of–Cut pins and reinstall in hole at desired setting as indicated on Height–of–Cut plate.

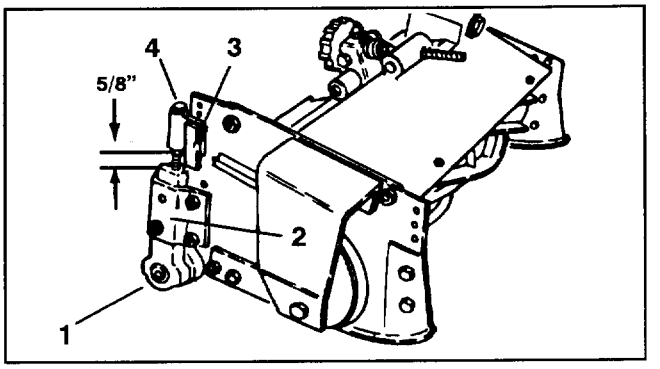

Figure 8

1. Roller bracket
2. Angle bracket
3. Height–of–cut pin
4. Support capscrew

5. Use a gage block with a height equal to the desired height–of–cut and position it against the front edge of the bedknife at one end. Turn the support capscrew to adjust the height of the bedknife equal to the gage block.

6. Repeat the procedure at the other end, then recheck the original end.

7. **Tighten nuts securing roller brackets.**

8. After initial set–up, height–of–cut may be changed by re–positioning Height–of–Cut pins to desired setting.

ADJUST BEDKNIFE PARALLEL TO REEL (Fig. 9–10) (Floating or Fixed Cutting Units)

1. Make sure reel contact is removed by turning bedknife adjustment knob counterclockwise (Fig. 9). Tip cutting unit to gain access to reel and bedknife (Fig. 10).

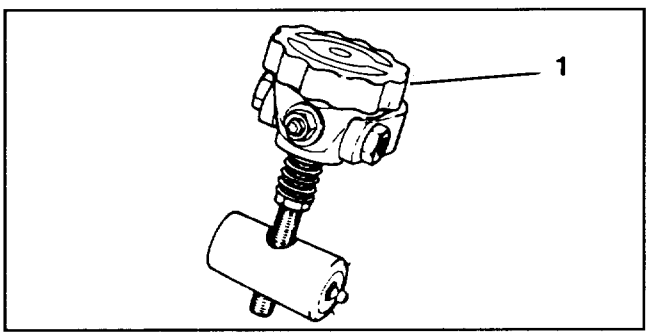

Figure 9

1. Bedknife adjusting screw

2. On either end of reel, insert a long strip of dry newspaper between reel and bedknife. While slowly rotating reel into bedknife, turn bedknife adjusting knob clockwise, one click at a time until paper is pinched lightly, which results in a slight drag when paper is pulled.

SET-UP INSTRUCTIONS

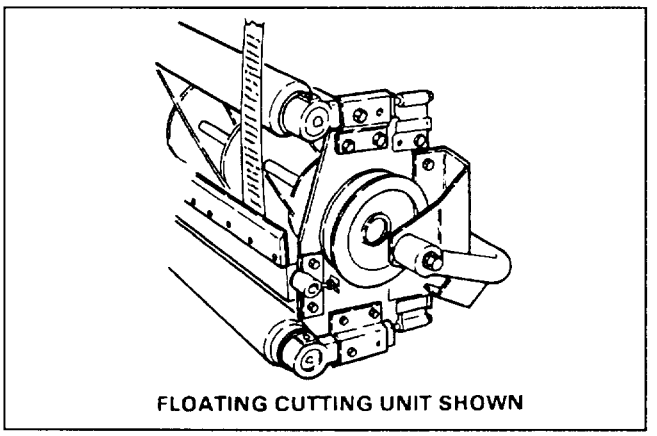

Figure 10

3. Check for light contact at other end of reel using paper. If light contact is not evident, proceed to next step.

4. Loosen (2) carriage bolts on bedbar adjuster (Fig. 11).

5. Adjust nuts to move bedbar adjuster up or down until paper is pinched along entire bedknife surface, when bedknife adjustment knob is adjusted to no more than two clicks beyond first contact of reel bedknife (Fig. 11).

6. Tighten nuts and carriage bolts and verify adjustment.

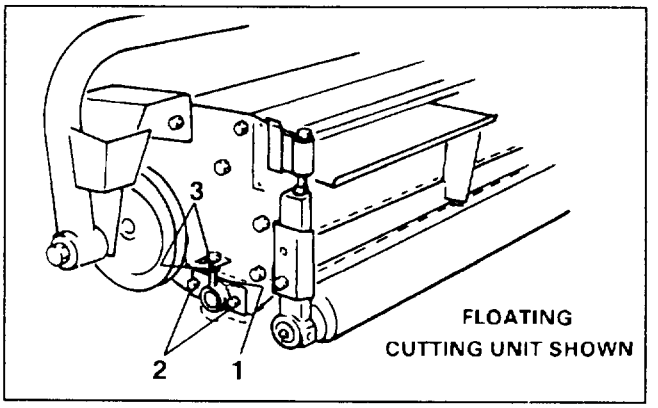

Figure 11

1. Bedbar adjuster 2. Carriage bolts 3. Adjustment nuts

VERIFY HEIGHT–OF–CUT SETTING (Fig.12) (Floating Cutting Unit)

1. On gauge bar, set head of screw to desired Height–of–Cut. This measurement is from bar face to underside of screw head. Gauge bar (Toro Part No. 13–8199) may be obtained from your local Toro Distributor.

2. Slightly loosen (crack) nut securing each front roller bracket to angle bracket.

3. Place the bar across the front and rear rollers and adjust the front roller support screws until the underside of screw head engages the bedknife cutting edge. Do this on both ends of reel.

4. Tighten nuts securing roller brackets.

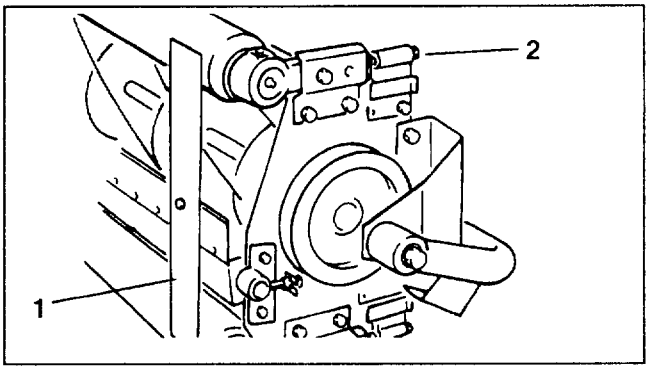

Figure 12

1. Gauge bar
2. Front roller support screw

MOUNT CUTTING UNITS (Fig. 13) (Floating Cutting Unit)

1. Slide a thrust washer onto lift arm pivot rod.

2. Slide cutting unit carrier frame onto pivot rod and secure with a flatwasher and capscrew.

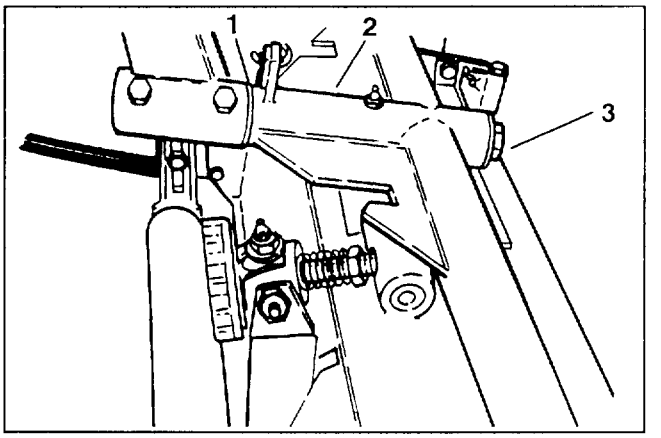

Figure 13

1. Thrust washer
2. Carrier frame
3. Flatwasher and flange head capscrew

MOUNT CUTTING UNITS (Fig. 14) (Fixed Cutting Units)

1. Slide a thrust washer onto lift arm pivot rod.

2. Slide cutting unit support onto pivot rod and secure with a flat washer and flange head capscrew.

Note: Thrust washer to be positioned between rear of cutting unit support and flatwasher on rear cutting unit.

Note: When mounting rear cutting unit, thrust washer to be positioned between cutting unit support and flatwasher at rear.

SET-UP INSTRUCTIONS

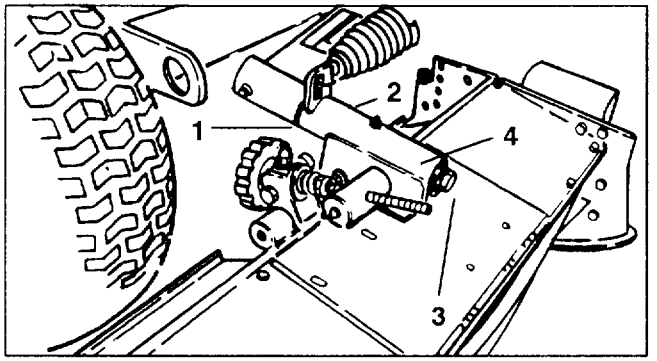

Figure 14

1. Thrust washer
2. Cutting unit support
3. Flatwasher & flange head capscrew
4. Cutting unit support

3. Front cutting units should be parallel to front wheels. To adjust, loosen capscrews securing supports to cutting units, adjust cutting units until parallel, then, retighten screws.

INSTALL CUTTING UNIT DRIVE BELTS (Fig. 15) (Floating Cutting Units)

1. Route (3) V–belts (two in loose parts) around jackshaft pulleys and reel pulleys.

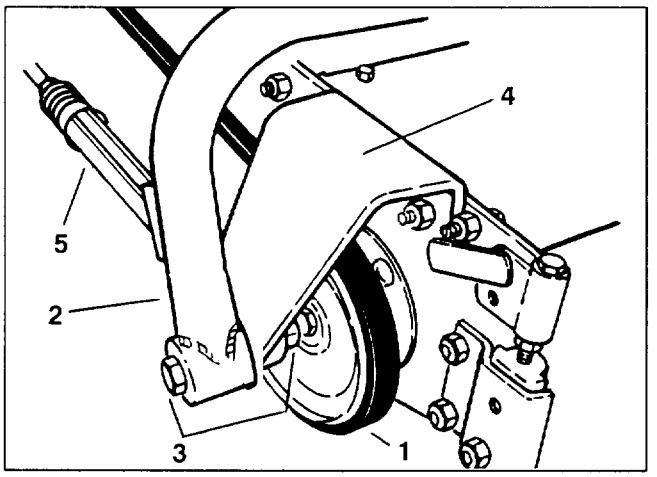

Figure 15

1. Cutting unit drive belt
2. Carrier frame
3. Shoulder bolt, (2) flatwashers & nut
4. Tensioner bracket
5. Belt tensioner

INSTALL CUTTING UNIT DRIVE BELTS (Fig. 16) (Fixed Cutting Units)

1. Route (3) V–belts (two in loose parts) around jackshaft pulleys and reel pulleys.

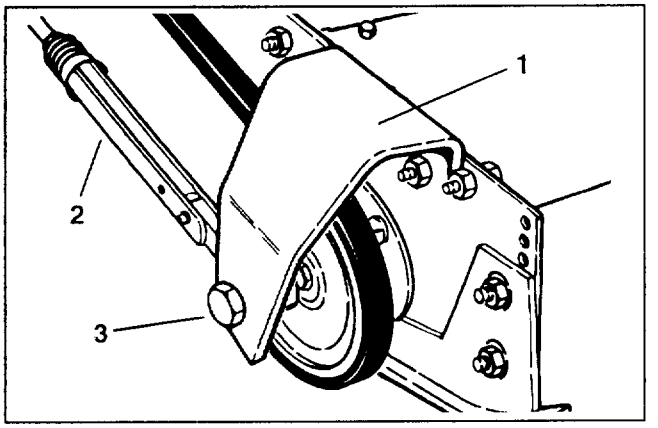

Figure 16

1. Tensioner bracket
2. Belt tensioner
3. Capscrew, (2) flatwashers, spacer & nut

INSTALL BELT TENSIONERS TO CUTTING UNITS (Fig. 15) (Floating Cutting Units)

1. On pulley end of front cutting units and both ends of rear cutting unit, remove nut from bolt securing carrier frame to tensioner bracket.

2. Install a spacer, belt tension rod and washer onto capscrew.

Note: Belt tension rods to be in locked position when installing. Loosen jam nut and rotate rod to adjust rod length for installation.

3. Reinstall nut previously removed.

INSTALL BELT TENSIONERS TO CUTTING UNITS (Fig. 16)

(Fixed Cutting Units)

1. On pulley end of front cutting units and both ends of rear cutting unit, install a washer, spacer, belt tension rod and spacer on capscrew.

Note: Belt tension rods to be in locked position when installing. Loosen jam nut and rotate rod to adjust rod length for installation.

2. Secure with nut.

ADJUST PULLEY CLEANERS (Fig. 17)

1. Adjust cleaner bracket so it is centered in groove of pulley and tighten carriage bolt and locknut.

2. Adjust cleaner bracket so there is approximately .030 – .060 clearance between bracket and pulley, then tighten capscrew and locknut.

SET-UP INSTRUCTIONS

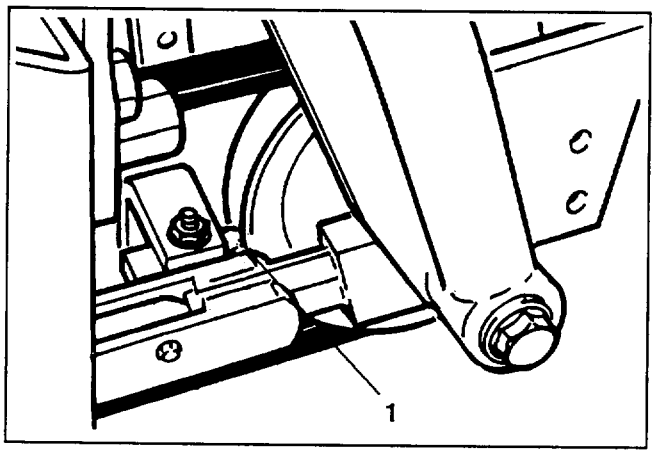

Figure 17
1. Cleaner bracket

INSTALL COUNTERBALANCE SPRINGS
(Figs. 18–20)

WARNING

Use caution when tensioning springs as they are under heavy load.

1. Hook one end of spring into second hole (from bottom) on cutting unit lift tab (Fig. 18).

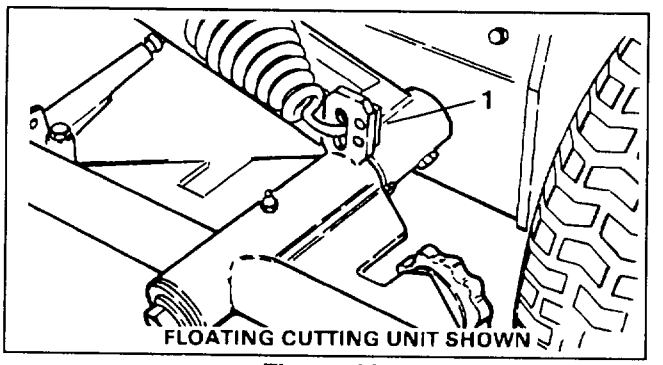

Figure 18
1. Cutting unit lift tab

2. On front cutting units secure other end of spring to appropriate hole (see chart) on counterbalance arm with spring shackle, (2) clevis pins and (2) cotter pin.

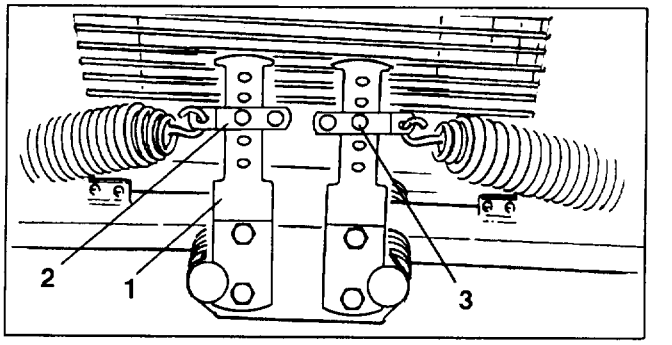

Figure 19
1. Counterbalance arm
2. Spring shackle
3. Clevis pin & cotter pin

Note: On rear counterbalance spring install vinyl cover over spring before installing.

3. On rear cutting unit secure other end of spring to appropriate hole (see chart) in counterbalance arm with (2) chain links, (5, 8 & 11 Blade Floating Cutting units) or (3) chain links (5 Blade Fixed Cutting units), spring shackle, (2) clevis pins and (2) cotter pins.

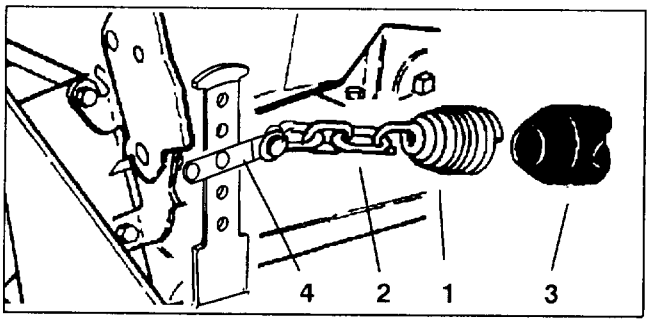

Figure 20
1. Rear counter balance spring
2. Chain links
3. Vinyl cover
4. Spring shackle

A. Second hole from Bottom — for 5 blade reel application

B. Middle hole — for 8 blade reels without baskets

C. Top hole — for 8 blade reels using baskets

IMPORTANT: These are recommended settings. Readjust spring positions to attain optimum performance. By raising spring locations on counterbalance arms, cutting unit weight on ground is reduced and traction is increased.

4. To tension the counterbalance springs proceed as follows:

A. Remove cotter pin and clevis pin securing spring shackle to counterbalance arm. Do not remove other clevis pin.

B. Move shackle up or down on counterbalance arm, until aligned with desired hole of arm. Reinstall clevis pin and cotter pin.

SET-UP INSTRUCTIONS

ADD REAR BALLAST

This unit complies with ANSI B71 .4–1984 Standard when equipped with rear ballast. Use chart below to determine weight or combinations of weights needed.

Cutting Unit Configuration	Weight Required
Fixed (no carrier frame	Calcium Chloride in rear tire.
Floating (with carrier frame and no baskets)	Calcium Chloride in rear tire and rear weight, Part No. 83–9370.
Floating (with carrier frame and baskets)	Calcium Chloride in rear tire and (2) rear weights, Part No. 83–9370.

IMPORTANT: If a puncture occurs in a tire with calcium chloride, remove unit from turf area as quickly as possible. To prevent possible damage to turf, immediately soak affected area with water.

Either Type 1 (77%) or Type 2 (94%) commercial calcium chloride flake may be used.

Plain water freezes solid at 32° F (0° C). The 3–1/2 pound (1 .6 kg) calcium chloride to one gallon (3.8 L) of water solution is slush free to –12° F (–24° C), and will freeze solid at –52° F (–46° C). The 5 pound (2.3 kg) per gallon (liter) solution is slush free to –50° F (–45° C) and will freeze solid at –62° F (–52° C).

Tires should be filled to approximately 75% capacity (valve level with valve at the top).

TO INSTALL REAR WEIGHT KIT, Part No. 83–9370 (Fig. 21)

1. Disconnect negative and positive battery cables from battery

2. Remove (2) carriage screws and flange locknuts securing battery hold down to rear frame and remove hold down and battery. Discard fasteners.

3. Remove (3) capscrews, flatwashers and grommets securing fuel tank to rear frame. Set fuel tank aside. Retain flatwashers and grommets for reinstallation.

4. Position weight on rear frame aligning mounting holes with holes in frame. Threaded holes in center of weight should be at the left front and right rear positions.

5. Using threaded holes in weight, secure it to frame with (2) 3/8 –16 x 1.00" lg. flange head screws as shown in figure 21.

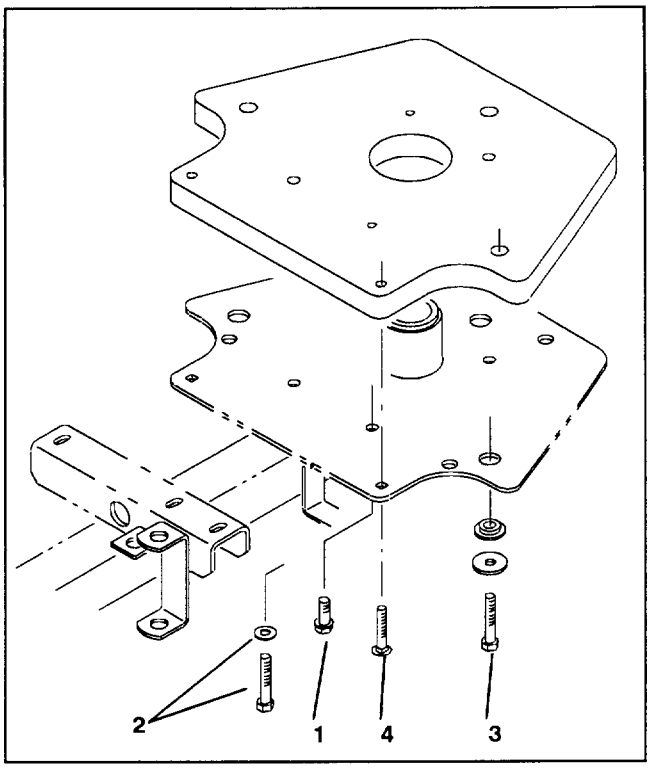

Figure 21

1. Flange head screw
2. Capscrew and flat washer
3. Capscrew, flatwasher and grommet
4. Carriage screw

6. If a second weight is to be mounted, proceed to step 7, otherwise proceed to step 9.

7. Turn second weight over and position on first weight so threaded holes align with non threaded holes in center of weights.

8. Using threaded holes in second weight, secure it to first weight and frame with (2) 3/8 –16 x 2.00" lg. capscrews and flat washers as shown in figure 21.

9. Position fuel tank on weight(s) aligning mounting holes. Secure tank in position with (3) 3/8 –16 x 2.00" lg. capscrews (one weight) or (3) 3/8 –16 x 3.00" lg. capscrews (two weights) and flatwashers and grommets previously removed.

10. Reinstall battery and battery hold down. Secure hold down to rear frame with (2) 5/16 x 1.75" lg. carriage screws (one weight) or (2) 5/16 x 2.75" lg. carriage screws (two weights).

11. Connect battery cables.

ACTIVATE AND CHARGE BATTERY (Fig. 22)

1. If Battery is not filled with electrolyte or activated, bulk electrolyte with 1.260 specific gravity must be purchased from a local battery supply outlet and added to battery.

SET-UP INSTRUCTIONS

CAUTION

Wear safety goggles and rubber gloves when working with electrolyte. Charge the battery in a well ventilated place so gasses produced while charging can dissipate. Since the gases are explosive, keep open flames and electrical spark away from the battery; do not smoke. Nausea may result if the gases are inhaled. Unplug charger from electrical outlet before connecting to or disconnecting charger leads from battery posts.

2. Remove filler caps from battery and slowly fill each cell until electrolyte is just above the plates.

3. Replace filler caps with vents pointing to the rear (toward fuel tank) and connect a 3 to 4 amp battery charger to the battery posts. Charge the battery at a rate of 3 to 4 amperes for 4 to 8 hours.

4. When battery is charged, disconnect charger from electrical outlet and battery posts.

5. Remove filler caps. Slowly add electrolyte to each cell until level is up to fill ring. Install filler caps.

IMPORTANT: Do not overfill battery. Electrolyte will overflow onto other parts of the machine and severe corrosion and deterioration will result.

6. Install the positive cable (red) to the positive (+) terminal and the negative cable (black) to the negative (—) terminal of the battery and secure with capscrews and nuts. Slide the rubber boot over the positive terminal to prevent possible short—out from occurring.

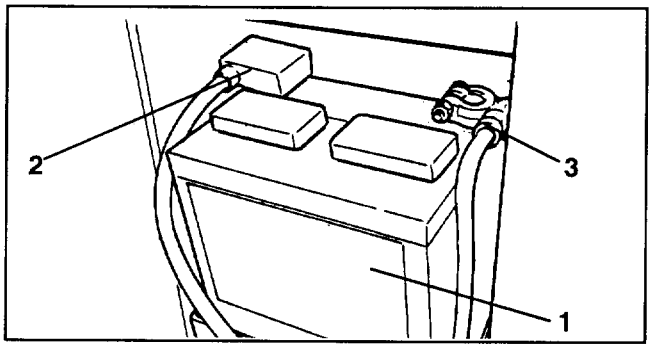

Figure 22

1. Battery
2. positive (+) battery cable
3. negative (—) battery cable

BEFORE OPERATING

CAUTION

Before servicing or making adjustments to the machine, stop engine and remove key from the switch.

CHECK CRANKCASE OIL (Fig. 23—24)

The engine is shipped with oil in the crankcase; however, level of oil must be checked before and after the engine is first started.

Crankcase capacity is approximately 3.8 liters with filter.

1. Position machine on a level surface.

2. Remove dipstick and wipe it with a clean rag. Push dipstick down into dipstick tube and make sure it is seated fully. Pull dipstick out and check level of oil. If oil level is low, add enough oil to raise level to FULL mark on dipstick.

3. If oil level is low, remove oil fill cap (Fig. 24) and gradually add small quantities of oil, checking level frequently, until level reaches FULL mark on dipstick.

4. The engine uses any high—quality 10W30 detergent oil having the American Petroleum Institute – API – "service classification" CD.

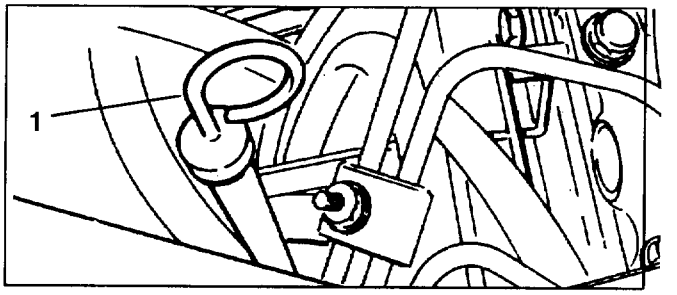

Figure 23

1. Dipstick

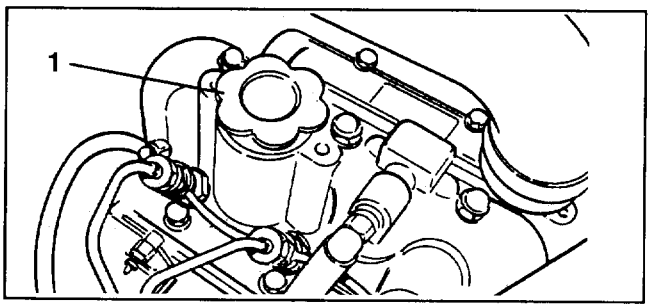

Figure 24

1. Oil fill cap

IMPORTANT: Check level of oil every 5 operating hours or daily. Change oil after every 50 hours of operation.

BEFORE OPERATING

FILL FUEL TANK (Fig. 25)

The engine runs on No. 2 diesel fuel.

Fuel tank capacity is approximately 6.5 gallons.

1. Clean area around fuel tank cap.

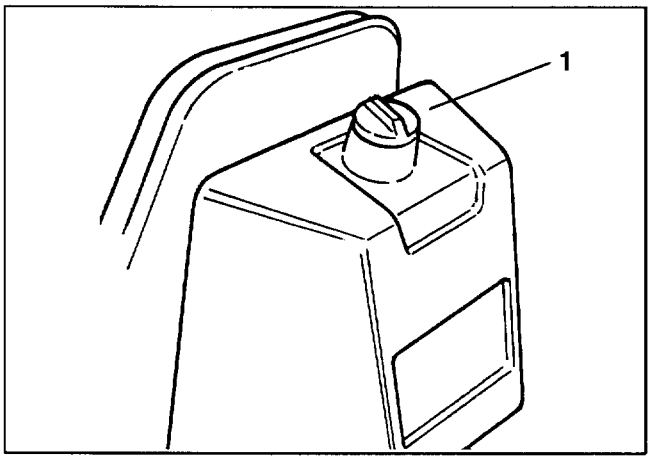

Figure 25

1. Fuel tank cap

2. Remove fuel tank cap.

DANGER

Because diesel fuel is flammable, use caution when storing or handling it. Do not smoke while filling the fuel tank. Do not fill fuel tank while engine is running, hot, or when machine is in an enclosed area. Always fill fuel tank outside and wipe up any spilled diesel fuel before starting the engine. Store fuel in a clean, safety–approved container and keep cap in place. Use diesel fuel for the engine only; not for any other purpose.

3. Fill tank to about one inch below top of tank, (bottom of filler neck). **DO NOT OVERFILL.** Then install cap.

4. Wipe up any fuel that may have spilled to prevent a fire hazard.

CHECK COOLING SYSTEM (Fig. 26 & 27)

Clean debris off radiator screen, radiator and oil cooler daily (Fig. 25), hourly if conditions are extremely dusty and dirty; refer to Cleaning Radiator and Screen Section, page 27.

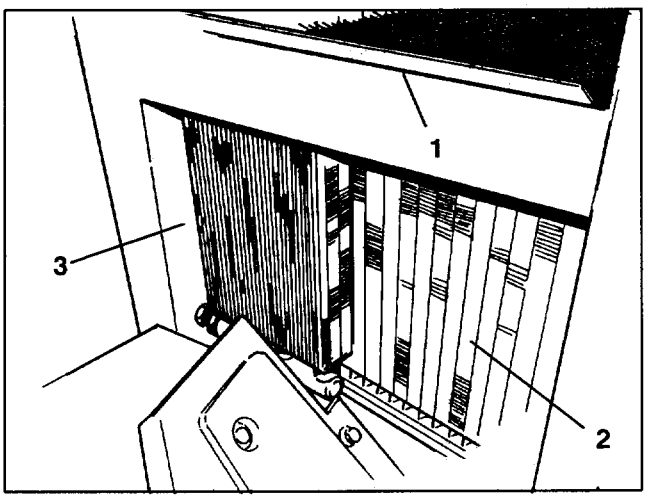

Figure 26

1. Radiator screen
2. Radiator
3. Oil cooler

1. The cooling system is filled with a 50/50 solution of water and permanent ethylene glycol anti–freeze. Check level of coolant at beginning of each day before starting the starting the engine. Capacity of cooling system is approximately 5–1/4 quarts.

CAUTION

If engine has been running, pressurized hot coolant can escape when radiator cap is removed and cause burns.

1. Carefully remove cap from radiator.

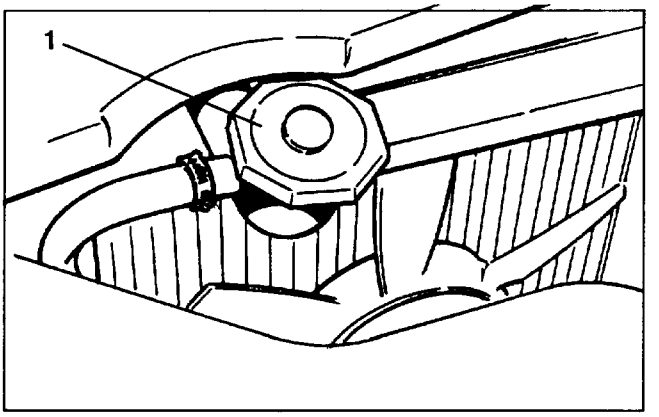

Figure 27

1. Radiator cap

2. Check level of coolant in radiator. Radiator should be filled to the top of the filler neck.

3. If coolant level is low, replenish the system. **DO NOT OVERFILL.** If coolant is added, bleeding the system may be required; refer to Bleeding Cooling System, page 22.

4. Install radiator cap.

BEFORE OPERATING

CHECK HYDRAULIC SYSTEM FLUID (Fig. 28)

The hydraulic system is designed to operate with Mobil DTE26 or equivalent anti–wear hydraulic fluid. The machine's system is filled at the factory with approximately 3.3 gallons of fluid. However, check level of hydraulic fluid before engine is first started and daily thereafter.

Hydraulic Oil (Recommended brands): (ISO 68)

Mobil	DTE26
Shell	Tellus 68
Amoco	Rykon Oil #68
Conoco	Super Hydraulic Oil 68
Exxon	Nuto68
Kendall	Kenoil R&O AW 68
Pennzoil	Penreco 68
Phillips	Magnus A 68
Standard	Energol HLP 68
Sun	Sunvis 831 WR
Union	Unaz AW 68
Chevron	AW Hydraulic Oil 68

Note: All are interchangeable.

IMPORTANT: Use only hydraulic oils specified. Other fluids could cause system damage.

Note: A red dye additive for the hydraulic system oil is available in 2/3 oz bottles. One bottle is sufficient for 4–6 gal of hydraulic oil. Order Part No. 44–2500 from your Authorized Toro Distributor.

1. Position machine on a level surface.

2. Make sure machine has been operated so oil is warm. Check level of oil by viewing in sight gauge. If oil level is at center of gauge, oil level is sufficient.

3. If oil level is not at center of gauge, remove cap from hydraulic oil reservoir and slowly fill reservoir with Mobil DTE 26 or equivalent hydraulic oil until level reaches center of sight gauge. **DO NOT OVERFILL.**

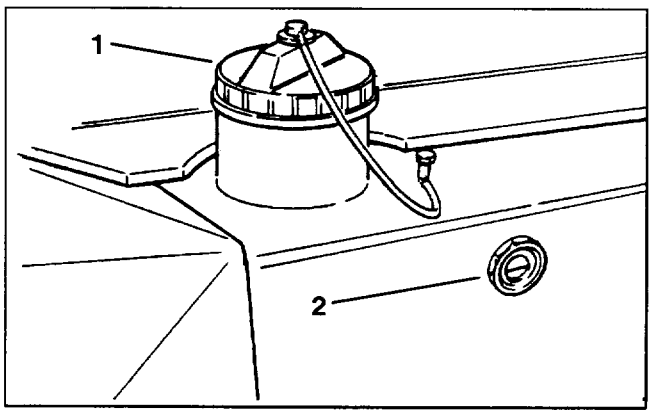

Figure 28
1. Hydraulic reservoir cap
2. Sight Gauge

IMPORTANT: To prevent system contamination, clean top of hydraulic oil containers before puncturing. Assure pour spout and funnel are clean.

4. Install reservoir cap. Wipe up any oil that may have spilled.

INSPECT FUEL FILTER (Fig. 29)

Inspect fuel filter bowl, daily, for water or other contaminants. If water or other contaminants are present, they must be removed before commencing operation.

1. Close fuel shut–off above filter.

2. Unscrew nut securing bowl to filter head. Remove water or other contaminants from bowl.

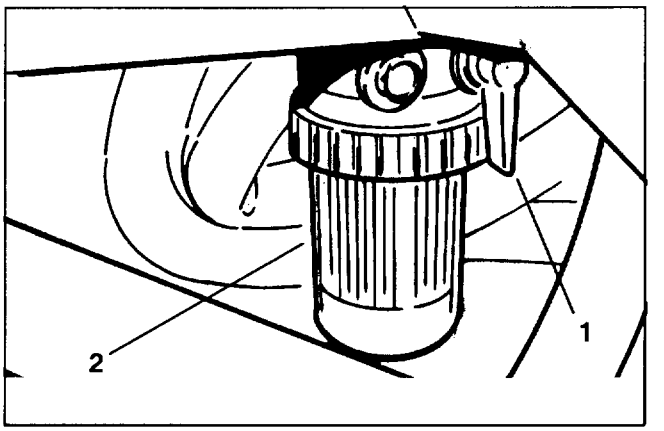

Figure 29
1. Fuel shut–off
2. Fuel filter

3. Inspect fuel filter and replace if dirty. Refer to Replacing Fuel Filter, page 28.

DANGER

Because diesel fuel is flammable, use caution when storing or handling it. Do not smoke while filling the fuel tank. Do not fill fuel tank while engine is running, hot, or when machine is in an enclosed area. Always fill fuel tank outside and wipe up any spilled diesel fuel before starting the engine. Store fuel in a clean, safety–approved container and keep cap in place. Use diesel fuel for the engine only; not for any other purpose.

4. Re–install bowl to filter head. Make sure O–ring is positioned properly between bowl mounting nut and filter head.

5. Open fuel shut–off above filter.

6. Open bleed screw on filter mounting allowing bowl to re–fill with fuel. Close bleed screw.

KNOW YOUR CONTROLS

Traction and Stopping Pedal (Fig. 30 & 31) – Traction pedal has three functions: one, to make the machine move forward, two, to move it backward and three, to stop machine. Using the heel and toe of the right foot, depress top of pedal to move forward and bottom of pedal to move backward or to assist in stopping when moving forward. Also, allow pedal to move or move it to neutral position to stop machine. For operator comfort, do not rest heel of foot on reverse when operating forward.

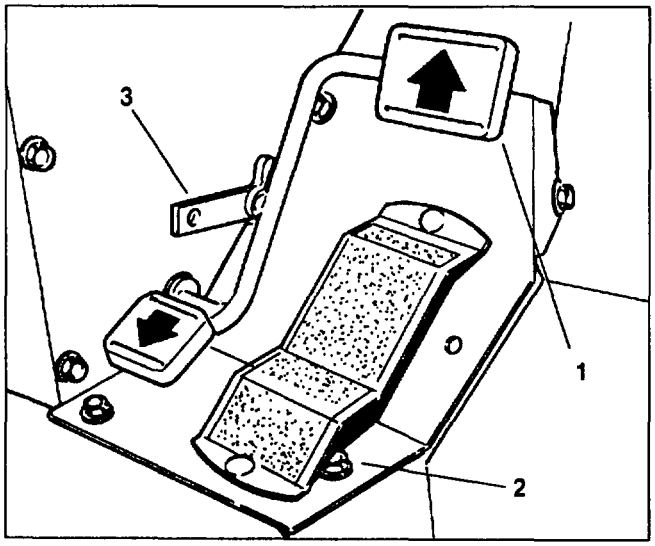

Figure 30

1. Traction pedal
2. Speed selector
3. Pedal stop

Speed Selector (Fig. 30) – Cam lever at side of traction pedal can be rotated to maintain desired speed.

The reverse pedal stop (under pedal) is set at the factory to provide 3 M.P.H. maximum speed in the reverse direction.

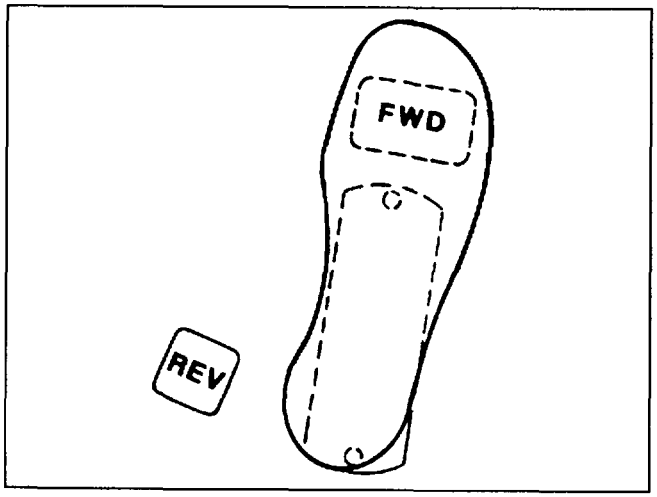

Figure 31

Ignition Switch (Fig. 32) – The ignition switch, used to start, stop and preheat the engine, has four positions: OFF, ON, START and GLOW PLUGS (PREHEAT). Rotate key counterclockwise – GLOW PLUG position – and hold it there for approximately 20 to 30 seconds, then, rotate key clockwise – START position – to engage starter motor. Release key when engine starts. The key will move automatically to the ON position. To shut engine off, rotate key counterclockwise to OFF position. Remove key from switch and install switch cover to prevent accidental starting.

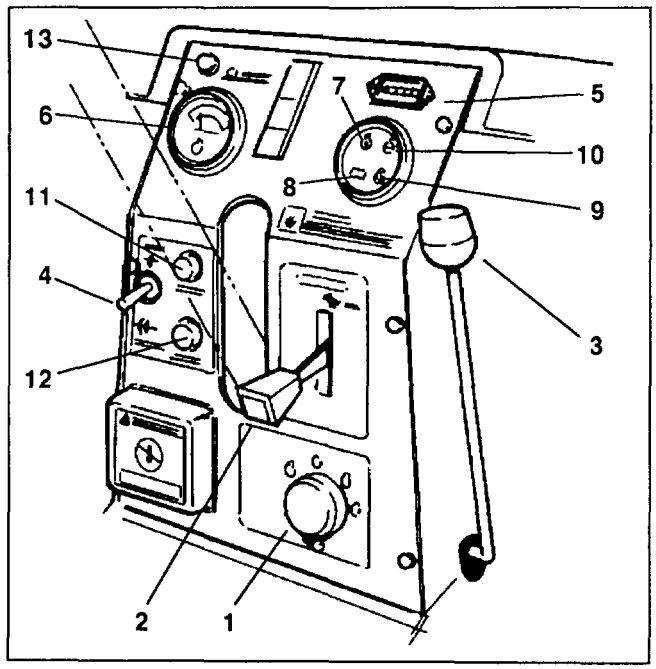

Figure 32

1. Ignition switch & cover
2. Throttle
3. Cutting unit lift lever
4. Cutting unit drive switch
5. Hour meter
6. Water temperature gauge
7. Oil pressure light
8. Amp gauge
9. Glow plug indicator
10. High water temperature shut-down light
11. Engine fuse
12. Accessory fuse
13. Reel operating light

Throttle (Fig. 32) – Throttle is used to operate engine at various speeds. Moving throttle upward increases engine speed, downward decreases engine speed. The throttle controls the speed of the reel blades and, in conjunction with traction pedal, controls ground speed of the machine. Position control in MOW for normal cutting. To attain TRANSPORT, move control to MOW, push control to right, then up to FAST.

Cutting Unit Lift Lever (Fig. 32) The lift lever has three positions: LOWER, RAISE, and NEUTRAL. To lower cutting units to the ground, move lift lever forward. When lowering cutting units, make sure hydraulic cylinder is completely retracted before releasing lift lever. Cutting units will not operate unless cylinder is retracted. To raise cutting units, pull lift lever rearward to the RAISE position. To decrease play in lever, tighten retaining locknut.

KNOW YOUR CONTROLS

Cutting Unit Drive Switch (Fig. 32) – The switch has two positions: ENGAGE and DISENGAGE. Toggle switch engages electromagnetic clutch to drive cutting units. Amber light on dash indicate when reels are rotating. Pull switch lever out to move from disengage to engage.

Hour Meter (Fig. 32) – Indicates the total hours of machine operation. The Hour Meter starts to function whenever the key switch is rotated to "ON" position.

Fuse Holders (Fig. 32) – Two 15 Amp fuses are incorporated to protects the engine and accessory circuits. To replace fuse, rotate knob counter-clockwise and remove fuse from case. Install fuse, insert knob and rotate clockwise to secure in panel.

Temperature Gauge (Fig. 32) – Registers coolant temperature in system.

Oil Pressure Light (Fig. 32) – Light glows if engine oil pressure drops below a safe level.

Water Temperature Light (Fig. 32) – Light glows and engine automatically shuts-down when engine coolant temperature gets too high.

Amp Light (Fig. 32) – The amp light should be off when engine is running, if it is on, the charging system should be checked and repaired as necessary.

Glow Plug Indicator (Fig. 32) – Indicator light will glow when glow plugs are operating.

Parking Brake – Whenever the engine is shut off, the parking brake must be engaged to prevent accidental movement of the machine. To engage the parking brake, pull back on lever.

Drive Engagement Control - Model 03425 only- (Fig. 33) – On lower left side of operator. Pull knob out for 2 wheel drive; push knob in for 3 wheel drive. Mower must come to a complete stop before shifting from 2 to 3 wheel drive.

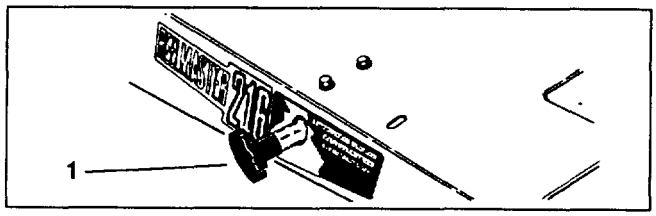

Figure 33

1. Deck engagement control
   Pull out - Two wheel drive
   Push in - Three wheel drive

Seat Adjustments (Fig. 34)
Fore and Aft Adjustment – Move lever on side of seat outward, slide seat to desired position and release lever to lock seat into position.

Deluxe Seat Adjustments (Fig. 34)
Weight Adjustment – Push lever up or down to adjust to operator's weight. Lever up – light operator, lever in middle position – medium weight operator or lever down for heavy operator.
Inclining Backrest – Turn handle to adjust angle of backrest. (Deluxe Seat only).

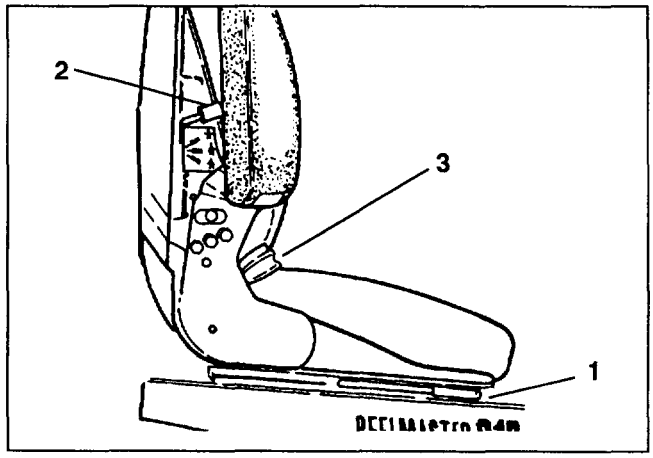

Figure 34

1. Fore and aft lever
2. Weight adjustment lever
3. Inclining backrest

Fuel Shut-off Valves (Fig. 35 & 36) – Close fuel shut-off valves, under fuel tank and on fuel filter, when storing machine.

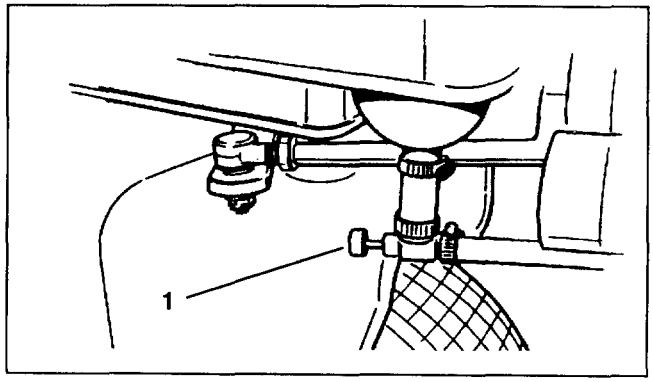

Figure 35

1. Fuel shut off (under fuel tank)

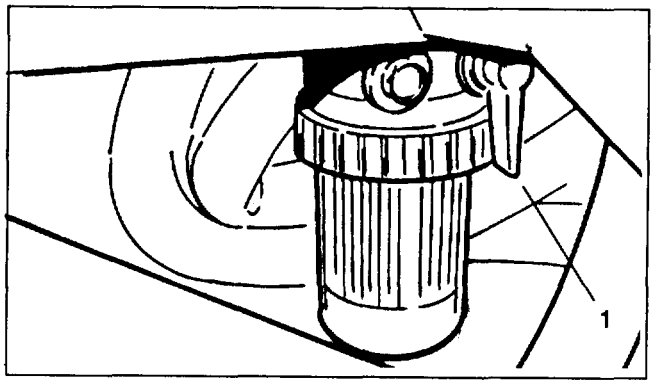

Figure 36

1. Fuel shut off (on fuel filter)

OPERATING INSTRUCTIONS

STARTING/STOPPING ENGINE

IMPORTANT: The fuel system may have to be bled if any of the following situations have occurred:

A. Initial start up of a new engine.

B. Engine has ceased running due to lack of fuel.

C. Maintenance has been performed upon fuel system components; i.e. filter replaced, etc.

Refer to Bleeding Fuel System

1. Be sure parking brake is set and Reel Drive switch is in DISENGAGE position.

2. Remove foot from traction pedal and make sure pedal is in neutral position.

3. Move throttle lever to full throttle position.

4. Remove cover from ignition switch. Insert key into ignition switch and and rotate it counterclockwise to — GLOW PLUG position — and hold it there for approximately 20 to 30 seconds, then, rotate key clockwise to — START position — to engage starter motor. Release key when engine starts. The key will move automatically to the ON position.

IMPORTANT: To prevent overheating of the starter motor, do not engage starter longer than 10 seconds. After 10 seconds of continuous cranking, wait 60 seconds before engaging starter motor again.

5. When engine is started for the first time, or after overhaul of the engine, operate the machine in forward and reverse for one to two minutes. Also operate the lift lever and reel drive switch to be sure of proper operation of all parts.

Turn steering wheel to the left and right to check steering response. Then shut engine off and check for oil leaks, loose parts and any other noticeable malfunctions.

CAUTION

Shut engine off and wait for all moving parts to stop before checking for oil leaks, loose parts and other malfunctions.

6. To stop engine, move throttle control downward to IDLE position, move reel drive switch to DISENGAGE and rotate ignition key to OFF. Remove key from switch and install switch cover to prevent accidental starting.

7. Close fuel shut off valves before storing machine.

BLEEDING FUEL SYSTEM (Fig. 37–38)

1. Park the machine on a level surface. Make sure fuel tank is at least half full.

2. Unlatch and raise hood.

DANGER

Because diesel fuel is flammable, use caution when storing or handling it. Do not smoke while filling the fuel tank. Do not fill fuel tank while engine is running, hot, or when machine is in an enclosed area. Always fill fuel tank outside and wipe up any spilled diesel fuel before starting the engine. Store fuel in a clean, safety–approved container and keep cap in place. Use diesel fuel for the engine only; not for any other purpose.

3. Open fuel shut–off valve under fuel tank and on fuel filter.

4 Open (2) bleed screws, on side of fuel filter mounting head, allowing bowl to re–fill with fuel. Close bleed screws when bowl is filled.

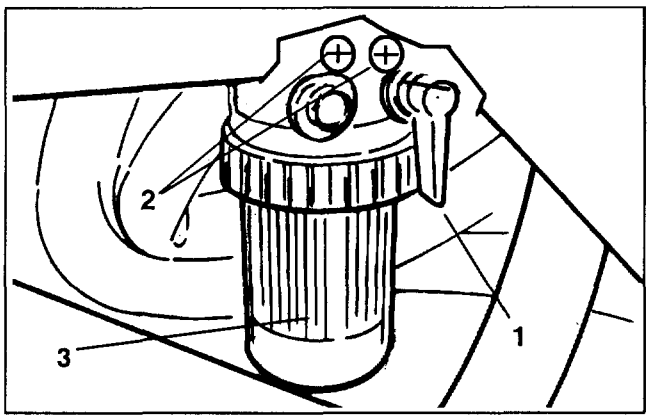

Figure 37

1. Fuel shut off
2. Bleed screws (2)
3. Bowl

5. On left side of engine (below alternator) locate transfer pump inlet screw. Note angle of fitting on transfer pump inlet and loosen screw (left screw only).

6. When a steady stream of fuel flows out of transfer pump screw, tighten screw, retaining angle of fitting before loosening.

7. Loosen injection pump inlet screw on right side of engine.

8. Pump priming lever until a steady stream of fuel flows out of injection pump inlet screw, then tighten screw.

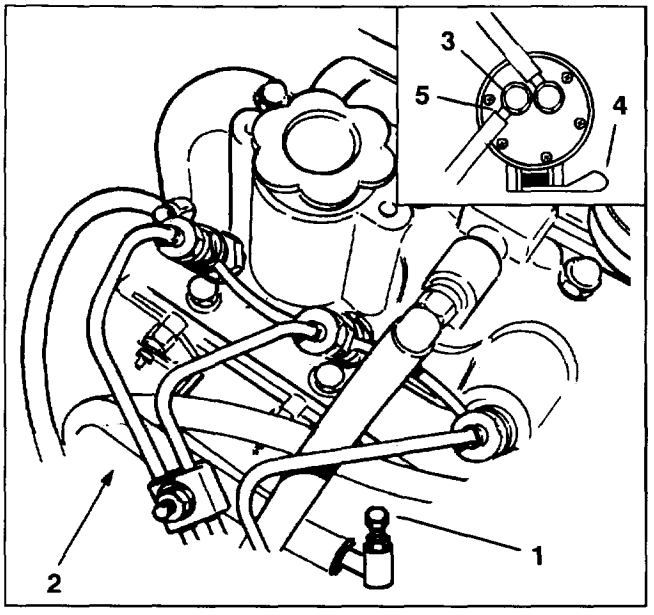

Figure 38

1. Transfer pump screw
2. Injection pump inlet screw location
3. Injection pump inlet screw
4. Priming lever
5. Note fitting angle

BLEEDING COOLING SYSTEM (Fig. 39)

If system is being completely filled or more than a quart of coolant is being added to system, cooling system may need to be bled.

1. Unlatch and raise hood.
2. Remove radiator cap.

CAUTION

If engine has been running, pressurized hot coolant can escape when radiator cap is removed and cause burns.

3. Remove square plug from radiator hose.

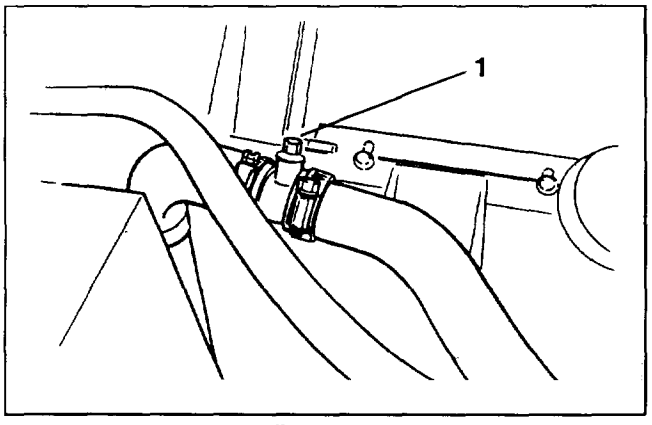

Figure 39

1. Hose plug

4. Slowly fill radiator with a 50/50 solution of water and permanent ethylene glycol anti-freeze until it comes out plug opening in hose.
5. Reinstall hose plug and finish filling radiator.
6. Install radiator cap.

CHECK OPERATION OF INTERLOCK SWITCHES

CAUTION

Do not disconnect the safety switches because they are for the operator's protection. Check operation of the switches daily to be sure the interlock system is operating correctly. If a switch is not operating properly, replace it before operating the machine. Replace the switches every two years to be sure of maximum safety.

1. With operator off the seat, traction pedal in neutral and cutting unit clutch switch in disengage position, the engine should start. If either the traction pedal is depressed or the cutting unit clutch switch is engaged, with operator off the seat,the engine should stop. Correct problem if not operating properly.

2. With operator on the seat, engine running, and cutting unit clutch switch engaged, the clutch should be engaged, the dash indicator light glowing and the jackshaft turning when the lift cylinder is fully retracted. As the lift cylinder is extended, the light should go out, the clutch disengage and the jackshaft stop turning. Correct problem if not operating properly.

3. With operator on seat, engine running, clutch switch engaged, cutting units lowered and lift cylinder fully retracted, reels should turn and dash indicator light should glow. If reels do not turn and light does not glow, there is a malfunction in the system that must be corrected before commencing operation.

ADJUST STEERING COLUMN (Fig. 40)

1. Unlatch and raise hood.
2. Remove capscrew securing steering column to frame bracket.
3. Adjust steering column to desired operating position and reinstall capscrew. Do not use top set of mounting holes in frame bracket.

OPERATING INSTRUCTIONS

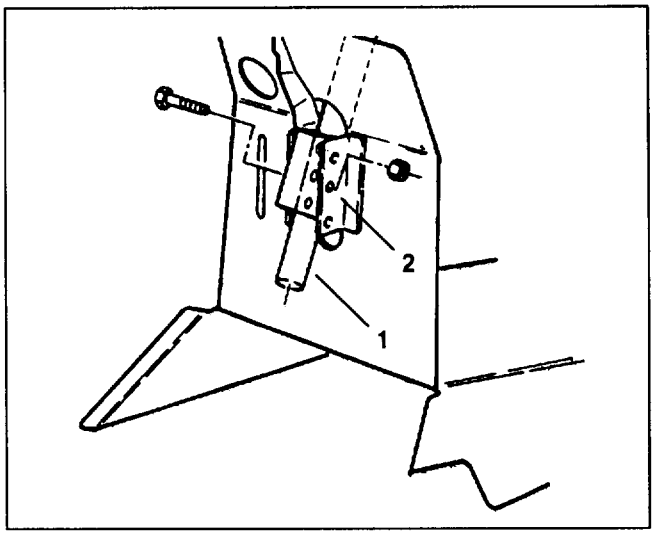

Figure 40
1. Steering column
2. Frame bracket

TOWING TRACTION UNIT (Fig. 41)

In case of emergency, the Reelmaster 216-D can be towed for a short distance. However, Toro does not recommend this as a standard procedure.

IMPORTANT: Do not tow the machine faster than 2-3 mph because drive system may be damaged. If machine must be moved a considerable distance, transport it on a truck or trailer.

1. Rotate by-pass valve on pump counterclockwise until it is fully open.

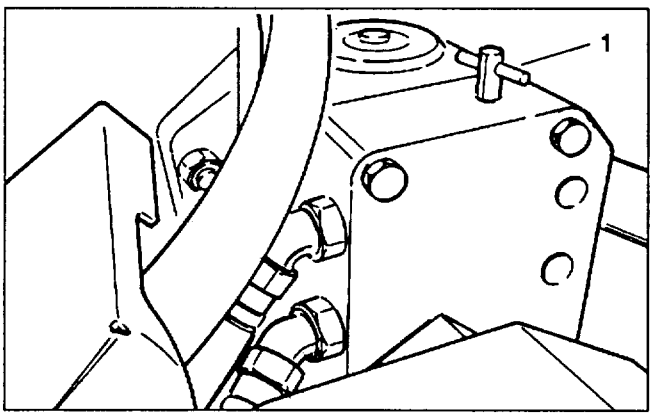

Figure 41
1. By-pass valve

2. Before starting engine, close by-pass valve securely by rotating it clockwise. Do not exceed 5-8 ft-lb torque. Do not start engine when valve is open.

TRAINING PERIOD

Before mowing with the Reelmaster 216-D, The Toro Company suggests you find a clear area and practice starting and stopping, raising and lowering cutting units, turning, etc. This training period will be beneficial to the operator in gaining confidence in the performance of the Reelmaster 216-D.

BEFORE MOWING

Inspect the area for debris and clear area if necessary. Determine the direction best to mow on the previous mowing direction. Always mow in an alternate pattern from the previous mowing, so that the grass blades will be less apt to lay down and therefore be difficult to gather between the reel blades and bedknife.

OPERATING CHARACTERISTICS

Practice operating the Reelmaster 216-D and become thoroughly familiar with it. Because of its hydrostatic transmission and choices of either two or three wheel drive (model 03425 only), its characteristics differ from many turf maintenance machines. Points to consider when operating are the traction drive, engine speed and load on the cutting units. Regulate the traction pedal to keep engine rpm high and somewhat constant while mowing to maintain adequate power for the traction and cutting units. Adjust the speed selector to maintain constant ground speed and quality of cut. However, when on hilly terrain, do not use the speed selector.

Follow operating guidelines presented in this manual and know how to operate the machine safely on all types of terrain. Use the slope gauge, page 35, to assist in determining slope angles of questionable areas. Never traverse or mow up and down on slopes over 20 degrees, nor traverse or mow side hills in excess of 15 degrees. Always plan well ahead to avoid the need for sudden stops, starts or turns. To stop, use the reverse pedal for braking. Before stopping the engine, disengage all controls, move throttle to IDLE position, and set parking brake.

TRANSPORT OPERATION

Be sure the cutting units are in fully up position, move traction pedal stop from under pedal to allow full traction pedal travel and place throttle control in FAST position. While operating on slopes and uneven terrain, always reduce speed and use extreme caution before turning to reduce risk of tipping or losing control. Watch carefully for, and avoid, holes in the terrain, sudden drop-offs and other hidden hazards. To prevent costly damage and down time, familiarize yourself with the width of the Reelmaster 216-D. Do not attempt to pass between immovable objects placed close together.

OPERATING INSTRUCTIONS

INSPECTION AND CLEAN–UP AFTER MOWING

At the completion of mowing operation, thoroughly wash the machine with a garden hose – without a nozzle – so excessive water pressure will not cause contamination and damage to seals and bearings.

Make sure radiator screen, radiator and oil cooler are kept free of dirt or grass clippings. After cleaning, it is recommended the machine be inspected for possible hydraulic fluid leaks, damage or wear to hydraulic and mechanical components and the cutting units checked for sharpness and proper reel to bedknife adjustment.

CUTTING UNIT CHARACTERISTICS

The single knob bedknife–to–reel adjustment system incorporated in this cutting unit simplifies the adjustment procedure needed to deliver optimum mowing performance. The precise adjustment possible with the single knob/bedbar design gives the necessary control to provide a continual self–sharpening action — thus maintaining sharp cutting edges, assuring good quality–of–cut, and greatly reducing the need for routine backlapping.

In addition, the rear roller positioning system permits optimum bedknife attitude and location for varying height–of–cuts and turf conditions.

CUTTING UNIT DAILY ADJUSTMENTS

Prior to each day's mowing, or as required, each cutting unit must be checked to verify proper bedknife–to–reel contact. **This must be performed even though quality of cut is acceptable.**

1. Shut off engine and lower cutting units onto a hard surface.

2. Release belt tension to cutting units, refer to Releasing Belt Tension to Cutting Units, page 30.

3. Slowly rotate reel in reverse direction listening for reel–to–bedknife contact. If no contact is evident, turn bedknife adjusting knob clockwise, one click at a time, until light contact is felt and heard.

4. If excessive contact is felt, turn bedknife adjusting knob counterclockwise, one click at a time until no contact is evident. Then turn bedknife adjusting knob one click at a time clockwise, until light contact is felt and heard.

IMPORTANT: Light contact is preferred at all times. If light contact is not maintained, bedknife / reel edges will not sufficiently self–sharpen and dull cutting edges will result after a period of operation. If excessive contact is maintained, bedknife/reel wear will be accelerated, uneven wear can result, and quality of cut may be adversely affected.

Note: As the reel blades continue to run against the bedknife a slight burr will appear on the front cutting edge surface the full length of the bedknife. If a file is occasionally run across the front edge to remove this burr, improved cutting can be obtained.

After extended running, a ridge will eventually develop at both ends of the bedknife. These notches must be rounded off or filed flush with cutting edge of bedknife to assure smooth operation.

LUBRICATION

GREASING BEARINGS AND BUSHINGS

(Fig. 42–50)

The traction unit and cutting unit's grease fittings must be lubricated regularly with No. 2 General Purpose Lithium Base Grease. If machine is operated under normal conditions, lubricate bearings and bushings after every 25 hours of operation. Bearings and bushings must be lubricated daily when operating conditions are extremely dusty and dirty. Dusty and dirty operating conditions could cause dirt to get into the bearings and bushings, resulting in accelerated wear.

The traction unit bearings and bushings that must be lubricated are:

Steering column (Fig. 42), steering gears (2) (Under skirt below steering sector) steering shaft (2) (Fig. 43), jackshaft pulley bearing (2) (Fig. 44), lift arms (3) (Fig. 45) pivot rods (3) (Fig. 46), and belt tensioners (3) (Fig. 47).

Also, apply grease to slots in cylinder support (Fig. 48).

IMPORTANT: Lubricating cutting units immediately after washing helps purge water out of bearings and increases bearing life.

The cutting unit lubrication points are: Single point adjustment knob (2) (Fig. 49), reel flange bearing (2) and front and rear rollers (Fig. 50).

LUBRICATION

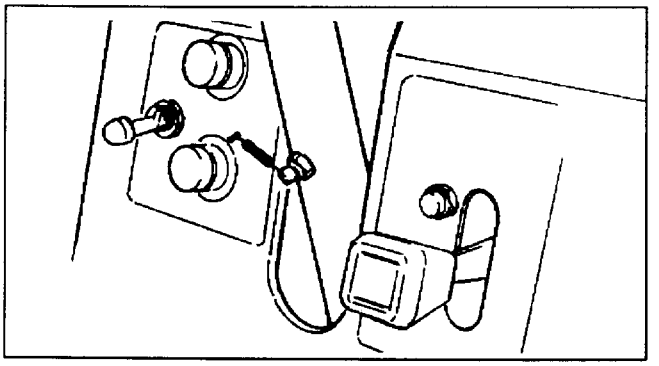

Figure 42

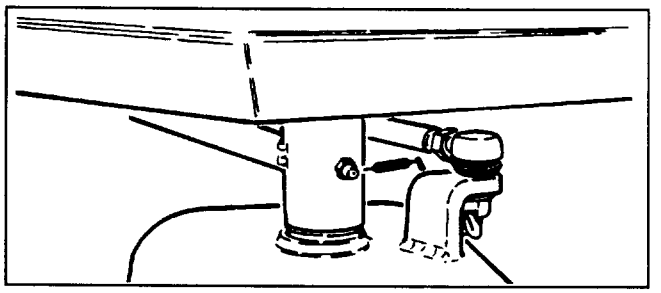

Figure 43

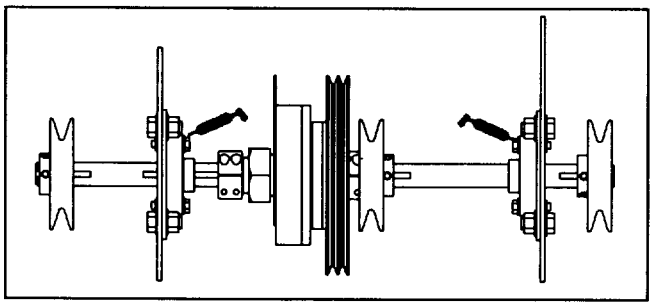

Figure 44

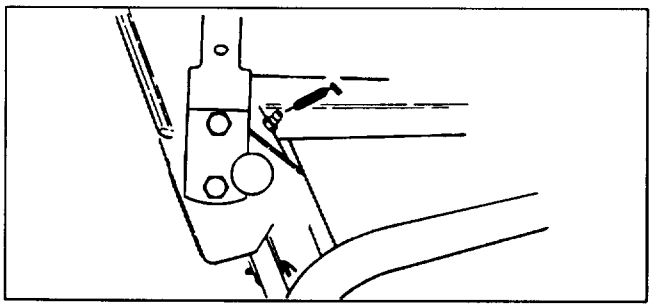

Figure 45

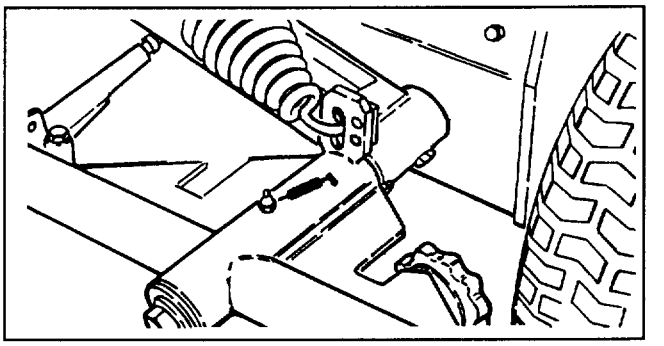

Figure 46

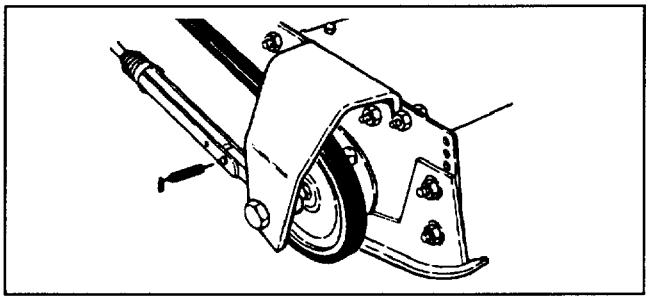

Figure 47

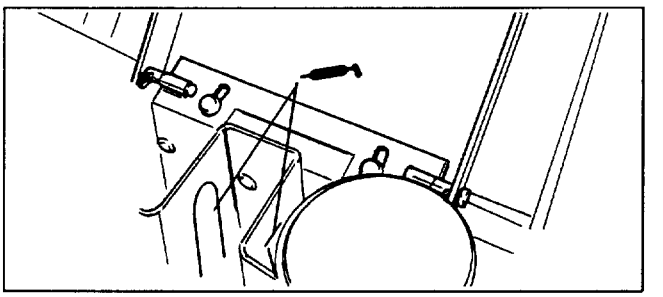

Figure 48

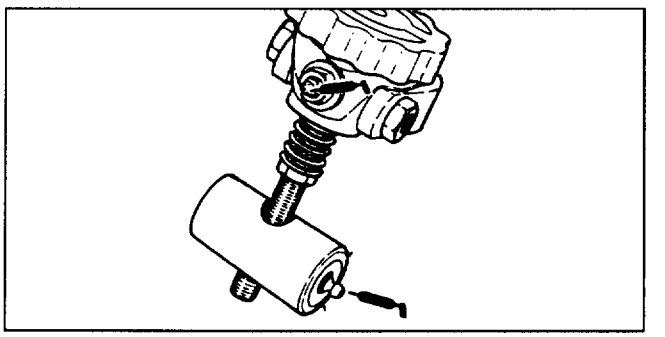

Figure 49

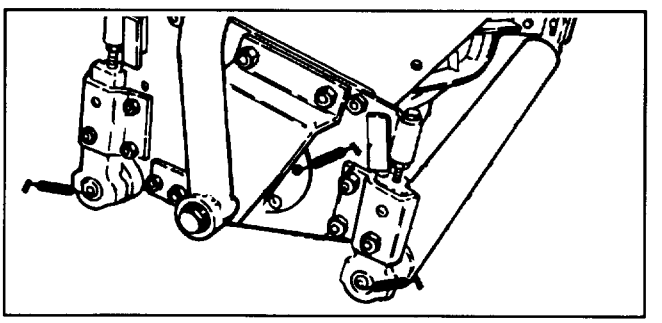

Figure 50

MAINTENANCE

CAUTION

Before servicing or making adjustments to the machine, stop engine and remove key from the switch.

HOOD REMOVAL (Fig. 51)

Hood may be easily removed to ease maintenance procedures in engine area of machine.

1. Unlatch and raise hood.

2. Remove one of the cotter pins securing hood pivot to mounting brackets.

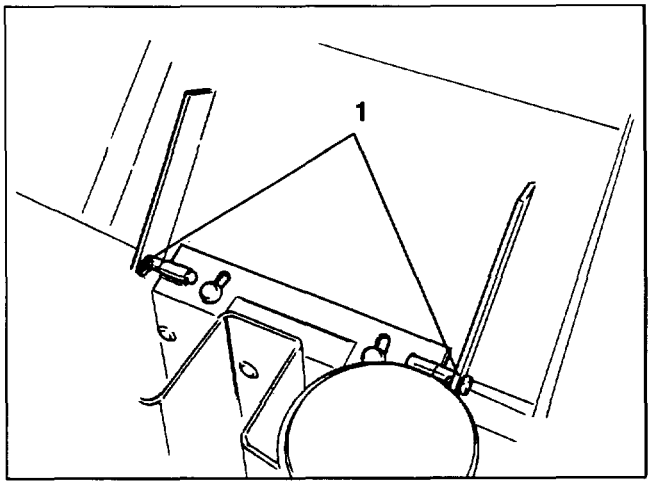

Figure 51

1. Cotter pins

3. Slide hood to one side, lift other side and pull out of brackets.

4. Reverse procedure to reinstall hood.

GENERAL AIR CLEANER MAINTENANCE

Inspect air cleaner and hose periodically to maintain maximum engine protection and to ensure maximum service life.

2. Check air cleaner body for dents and other damage which could possibly cause an air leak. Replace a damaged air cleaner body.

3. Be sure dust cup is sealing around air cleaner body.

SERVICING DUST CUP AND BAFFLE (Fig. 52–53)

Inspect the dust cup and rubber baffle once a week or every 50 hours operation. However, daily or more frequent inspection is required when operating conditions are extremely dusty and dirty. Never allow dust to build up closer than one inch from the rubber baffle.

1. Loosen thumb screw until dust cup and baffle can be removed. Separate dust cup and baffle.

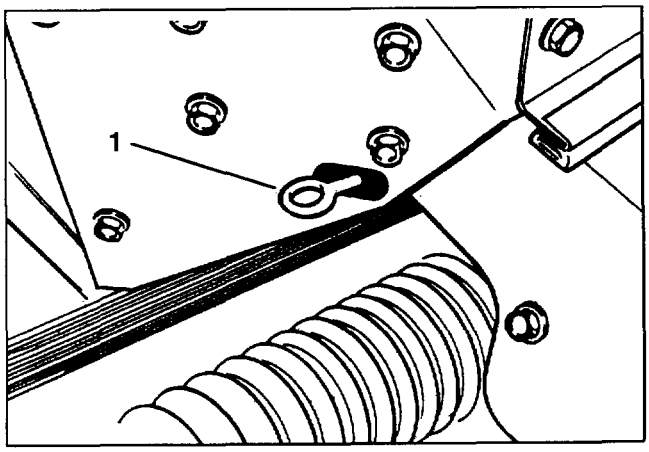

Figure 52

1. Air cleaner thumb screw

2. Dump dust out of the dust cup. After cleaning cup and baffle, assemble and reinstall both parts.

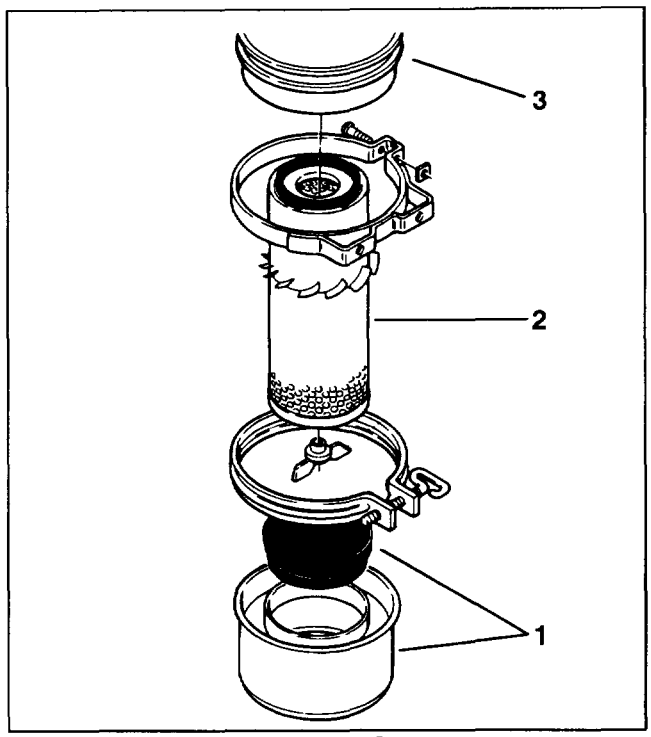

Figure 53

1. Dust Cup & Baffle
2. Filter Element
3. Air Cleaner Body

SERVICING AIR CLEANER FILTER (Fig. 53)

Service the air cleaner filter every 400 hours or more frequently in extreme dusty or dirty conditions by washing or using compressed air. Replace the element after every four cleanings (1600 hours) or annually, whichever comes first.

1. Remove and service dust cup; refer to Servicing Dust Cup and Baffle.

2. Remove wing nut w/gasket and slide filter element out of air cleaner body.

3. Clean the element by washing it in a solution of filter cleaner (Toro Part No. 27-7220) and water, or blow dirt out of filter by using compressed air.

SERVICING AIR CLEANER FILTER (Fig. 53)

Note: Compressed air is recommended when element must be used immediately after servicing because a washed element must be dried before it is used. By comparison, washing the element cleans better than blowing dirt out with compressed air. Remember, though, filter must be washed when exhaust soot is lodged in the filter pores.

Washing Method

IMPORTANT: Do not remove plastic fin assembly because washing removes dust from beneath fins.

A. Prepare a solution of filter cleaner and water and soak filter element about 15 minutes.Refer to directions on filter cleaner carton for complete information.

B. After soaking filter for 15 minutes, rinse it with clear water. Maximum water pressure must not exceed 40 psi to prevent damage to the filter element.

C. Dry filter element using warm, flowing air(160°F) max), or allow element to air–dry. Do not use compressed air or a light bulb to dry the filter element because damage could result.

Compressed Air Method

IMPORTANT: Do not remove plastic fin assembly because back–blowing with compressed air removes dust from beneath fins.

A. Blow compressed air from inside to the outside of dry filter element. Do not exceed 100 psi to prevent damage to the element.

B. Keep air hose nozzle at least one inch from pleated paper, and move nozzle up and down while rotating the filter element. Inspect element when dust and dirt are removed; refer to Inspecting Filter Element.

4. Wipe inside of air cleaner body with a damp cloth to remove excess dust. Slide filter into air cleaner body and secure it in place with wing nut and gasket.

5. Reinstall dust cup and baffle. Move thumb screw behind air cleaner body and tighten it securely.

INSPECTING FILTER ELEMENT

1. Place bright light inside filter.

2. Rotate filter slowly while checking for cleanliness, ruptures, holes, and tears. Replace defective filter element.

3. Check fin assembly, gasket, and screen for damage. Replace filter if damage is evident.

CLEANING RADIATOR AND SCREEN (Fig. 54)

To prevent the system from overheating, radiator screen, radiator and oil cooler must be kept clean. Check the screen, radiator and oil cooler daily and, if necessary, clean any debris off these parts. Clean these components more frequently in dusty dirty conditions.

1. Remove radiator screen.

2. Working from fan side of radiator, either spray the radiator with a hose or blow with compressed air.

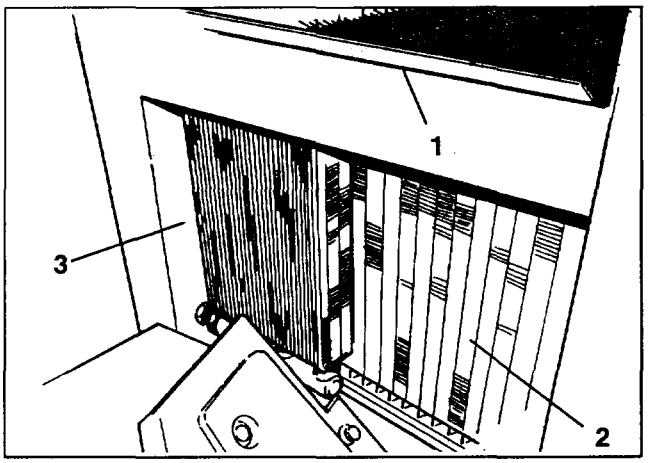

Figure 54

1. Radiator screen
2. Radiator
3. Oil cooler

3. Thoroughly clean oil cooler and any other debris that may have collected around components.

4. Clean screen and re–install.

CHANGING ENGINE OIL AND FILTER

Change oil and filter initially after the first 20 hours of operation, thereafter change oil every 50 hours and filter every 100 hours.

1. Locate engine oil drain plug on bottom, rear of oil pan. Remove drain plug and let oil flow into drain pan. When oil stops, install drain plug.

2. Locate engine filter on rear of engine. Remove oil filter. Apply a light coat of clean oil to the new filter seal before screwing it on. DO NOT OVER–TIGHTEN.

3. Add oil to crankcase, refer to Check Engine Oil, page 16.

MAINTENANCE

CHANGING HYDRAULIC SYSTEM FLUID AND FILTER (Fig. 55–56)

The hydraulic system filter must be changed initially, after the first five hours of operation, and thereafter every 250 hours of operation or yearly, whichever comes first. Use a genuine Toro oil filter for replacement. The hydraulic fluid must be changed every 500 hours of operation or yearly, whichever comes first.

1. Park the machine on a level surface, lower the cutting units, set parking brake and turn the engine off.

2. If only the filter is to be changed, remove reservoir cap and insert reservoir plug (Fig. 57), to block outlet.

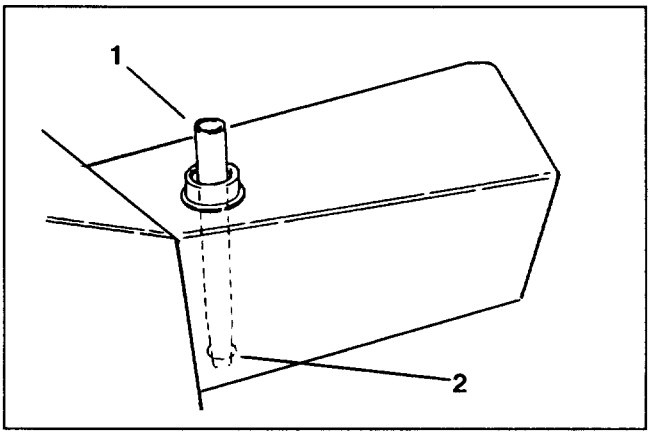

Figure 55
1. Reservoir plug
2. Reservoir outlet

This will retain most of the fluid in reservoir when filter is removed.

3. Clean the area around the hydraulic oil filter. Remove filter from the bottom of the filter housing and allow the oil to flow into a drain pan. Use bottom type filter wrench. Dispose of the oil filter properly.

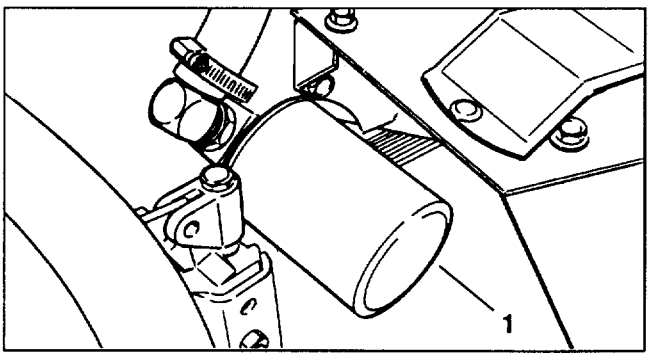

Figure 56
1. Hydraulic oil filter

4. Apply a film of oil on the filter gasket. Install filter by hand until gasket contacts mounting head; then tighten filter an additional three–fourths turn.

5. Fill the reservoir to proper level, refer to Check Hydraulic System Fluid, page 18.

6. Place all controls in neutral or disengaged position and start engine. Run engine at lowest possible RPM to purge the system of air.

7. Run engine until lift cylinder extends and retracts and forward and reverse wheel motion is achieved.

8. Stop the engine and check the oil level in reservoir, add oil if necessary.

9. Check all connections for leaks.

REPLACING FUEL FILTER (Fig. 57)

Inspect fuel filter bowl, daily, for water or other contaminants. If water or other contaminants are present, they must be removed before commencing operation.

1. Close fuel shut–off above filter.

2. Unscrew nut securing bowl to filter head. Remove water or other contaminants from bowl.

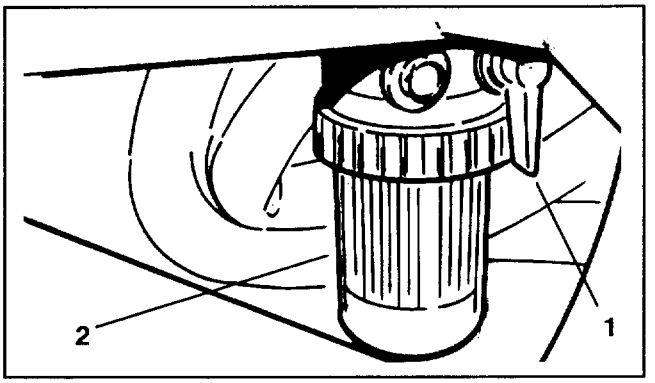

Figure 57
1. Fuel shut–off
2. Fuel filter

3. Remove and inspect fuel filter. Replace if dirty.

DANGER

Because diesel fuel is flammable, use caution when storing or handling it. Do not smoke while filling the fuel tank. Do not fill fuel tank while engine is running, hot, or when machine is in an enclosed area. Always fill fuel tank outside and wipe up any spilled diesel fuel before starting the engine. Store fuel in a clean, safety–approved container and keep cap in place. Use diesel fuel for the engine only; not for any other purpose.

4. Re–install bowl to filter head. Make sure O–ring is positioned properly between bowl mounting nut and filter head.

5. Open fuel shut–off above filter.

6. Open bleed screw on filter mounting head to re–fill bowl with fuel. Close bleed screw.

MAINTENANCE

ADJUSTING TRANSMISSION FOR NEUTRAL (Fig. 58-59)

If the machine "creeps" when the traction control pedal is in the neutral position, the spring leaf assembly must be adjusted.

1. Block up under the frame so one of the front wheels is off the floor. Place selector control in two wheel drive position.

2. To expose spring leaf assembly, remove (4) screws securing right fender to frame and remove fender.

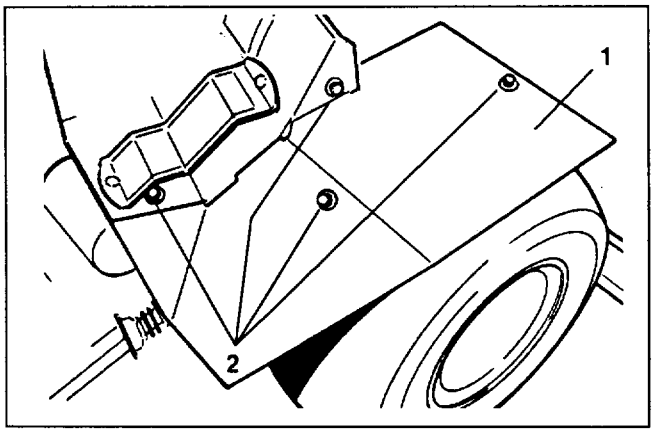

Figure 58
1. Right fender
2. Fender mounting screws

3. Start engine, move throttle to SLOW and check front wheel that is off shop floor; it must not be rotating. If wheel is rotating forward, loosen capscrews and lightly tap bottom of pump plate counterclockwise. By contrast, tap pump plate clockwise if wheel is rotating backward. When wheel stops rotating, tighten capscrews holding pump plate against side of pump. Verify the adjustment with throttle in SLOW and FAST position.

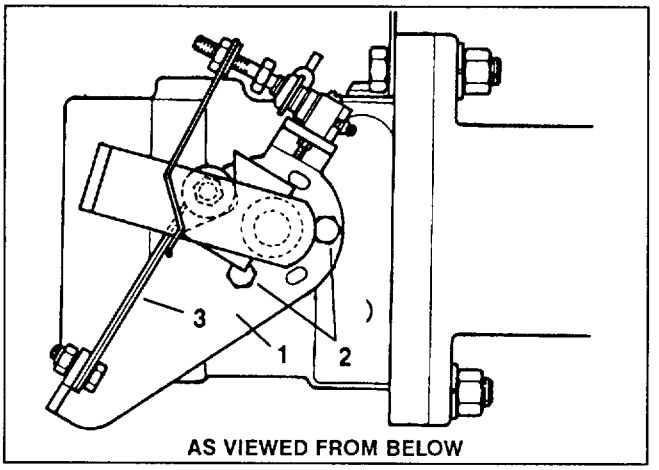

Figure 59
1. Pump plate
2. Capscrews
3. Leaf springs

4. Should the wheel continue to rotate, check for the following:

A. Ball bearing is loose or worn out.

B. Plunger on interlock switch is sticking.

C. Loose or missing fasteners.

D. Worn fasteners.

E. Pump lever loose on control shaft. (Correct by applying Loctite 271 or 601 to shaft).

F. Weak or damaged leaf springs. Replace.

G. Internal pump component malfunction.

BELT ADJUSTMENTS

Make sure belts are properly tensioned to assure proper operation of the machine and prevent unnecessary wear. Check all belts midway in span of belt. On new belts, check tension after 8 hours operation.

Hydraulic Pump Belt (Fig. 60)

1. Tighten nut on adjustment rod (Fig. 52) until desired belt tension is attained.

Note: Tighten belt to eliminate slippage (squealing under load) but do not overtighten.

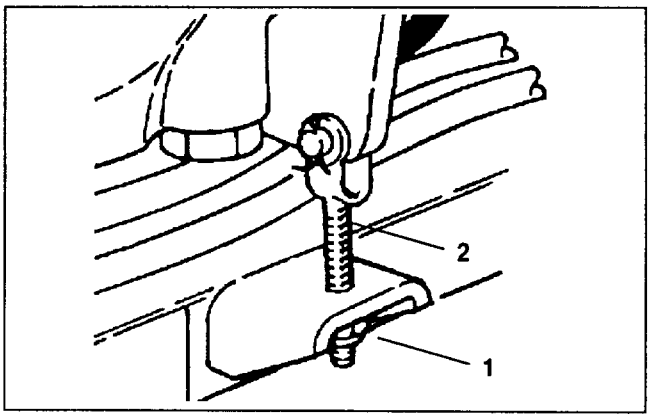

Figure 60
1. Nut
2. Adjustment rod

Engine/Clutch To Jack Shaft Belt

1. Make sure the idler bracket and belt tensioner assembly are free to move.

2. Adjust nut on belt tensioner (left side of engine) to compress spring to a length of 3/4".

Cutting Unit Drive Belts (Fig. 61)

1. The cutting unit drive belts should have a maximum deflection of 1/2 inch with a 10 pound load applied.

2. Loosen jam nut on front end of belt tension rod. Rotate rod to lengthen or shorten rod to desired length. Tighten jam nut.

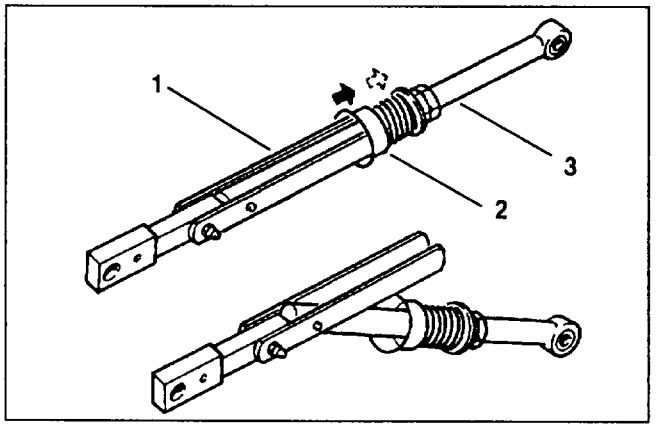

Figure 61
1. Belt tension rod
2. Belt tension rod cup retainer
3. Jam nut

3. To release belt tension to cutting units, push retaining cup rearward and pivot yoke downward .

Water Pump Belt

The water pump belt should have a maximum deflection of .100 inch with a 3 pound load applied.

1. On right side of engine, loosen bolt securing water pump idler pulley to adjusting bracket.

2. Adjust belt to proper tension and re-tighten bolt.

Alternator / Fan Belt (Fig. 62)

The alternator / fan belt should have a maximum deflection of .100 inch with a 1 pound load applied..

1. Loosen bolt securing alternator to engine and bolt securing alternator to adjusting bracket.

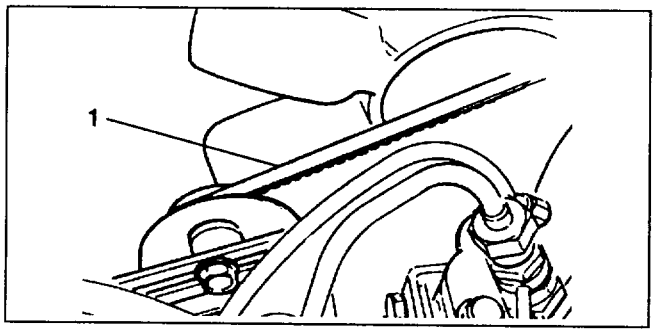

Figure 62
1. Alternator / fan belt

2. Adjust belt to proper tension and tighten bolts.

ADJUSTING STEERING STOPS (Fig. 63)

To increase or decrease the turning radius of the machine, steering stop screws may be adjusted.

1. Loosen locknuts securing stop screws to tabs on steering sector.

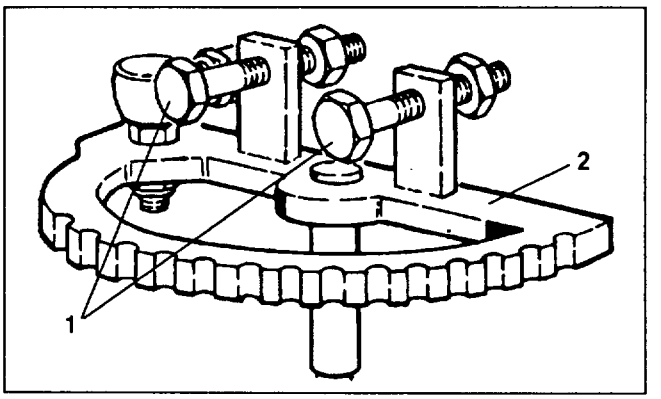

Figure 63
1. Stop screws
2. Steering sector

2. Thread stop screws in or out until desired turning radius is attained.

3. Check adjustment and retighten locknuts.

ADJUSTING TRACTION PEDAL (Fig. 64)

If traction pedal contacts footrest when pushed fully forward or maximum forward traction speed is unattainable, an adjustment to the traction pedal linkage is required.

1. To expose traction rod, remove (4) screws securing right fender (Fig. 58) to frame and remove fender.

2. Loosen jam nuts on each end of traction rod.

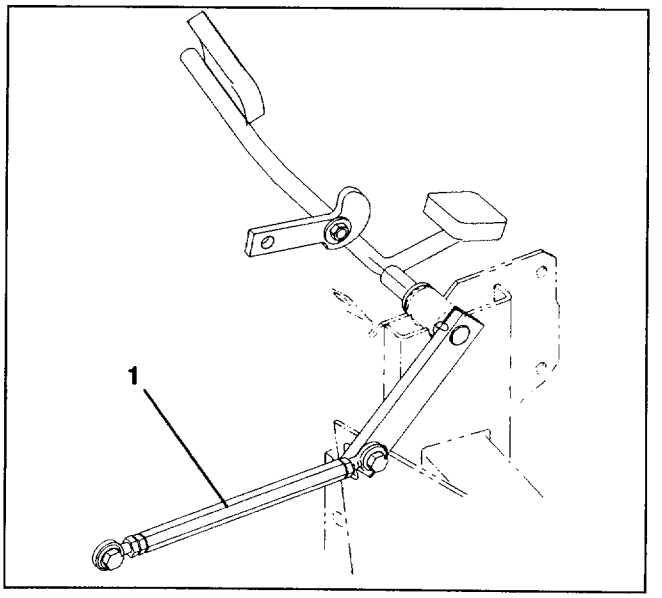

Figure 64
1. Traction rod

3. Rotate rod until required pedal clearance or traction speed is attained.

4. Retighten jam nuts securing traction rod adjustment.

5. The stop for reverse travel (under pedal) may be adjusted for slower travel. Speeds in excess of 3 M.P.H. are not recommended.

MAINTENANCE

HAND BRAKE ADJUSTMENT (Fig. 65)

1. Remove both front wheels.

2. Make sure brake is in the OFF position.

3. Loosen jam nut on clevis. Remove cotter pin securing top of clevis to upper brake lever. Rotate clevis, one turn at a time, to decrease distance between levers.

4. Reinstall clevis to upper brake lever and tighten jam nut. Repeat procedure on opposite side of machine.

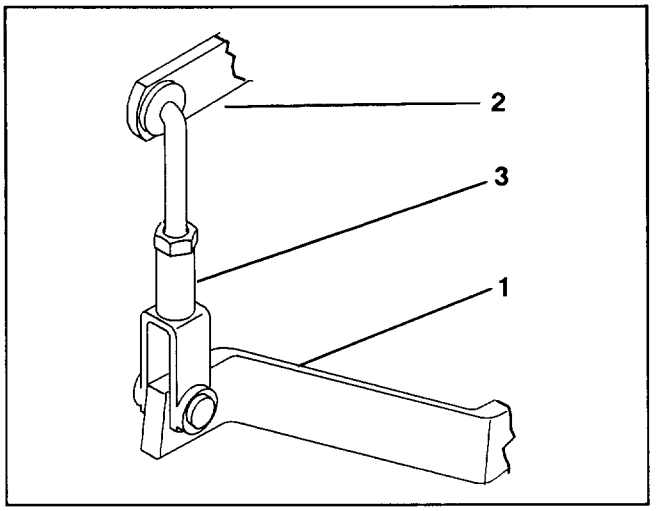

Figure 65
1. Lower brake lever
2. Upper brake lever
3. Clevis

5. After any brake adjustment, operate the vehicle at a low speed (one mph or less) and check that brakes engage equally on both wheels. Readjust as necessary.

ADJUST HOOD LATCH (Fig. 66)

1. To adjust hood latch, loosen nuts securing latch to hood and reposition latch as required.

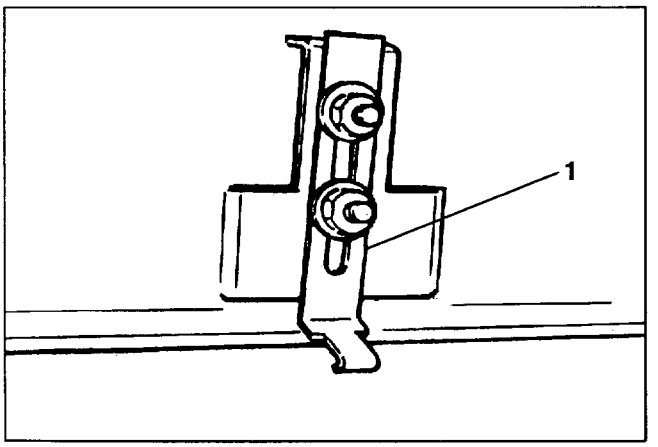

Figure 66
1. Hood latch

BATTERY CARE

1. Battery electrolyte level must be properly maintained and the top of the battery kept clean. If the machine is stored in a location where temperatures are extremely high, the battery will run down more rapidly than if the machine is stored in a location where temperatures are cool.

CAUTION

Wear safety goggles and rubber gloves when working with electrolyte. Charge the battery in a well ventilated place so gases produced while charging can dissipate. Since the gases are explosive, keep open flame and electrical spark away from the battery; do not smoke. Nausea may result if the gases are inhaled. Unplug charger from electrical outlet before connecting to, or disconnecting, charger leads from battery posts.

2. Check the electrolyte level every 25 operating hours or, if machine is in storage, every 30 days.

3. Maintain cell level with distilled or demineralized water. Do not fill cells above the bottom of the split ring inside each cell. Install filler caps with vents pointing to the rear (toward fuel tank).

4. Keep top of battery clean by washing periodically with a brush dipped in ammonia or bicarbonate of soda solution. Flush the top surface with water after cleaning. Do not remove the fill caps while cleaning.

5. Battery cables must be tight on terminals to provide good electrical contact.

WARNING

Connecting cables to the wrong post could result in personal injury and/or damage to the electrical system.

6. If corrosion occurs at terminals, disconnect cables, negative (—) cable first and scrape clamps and terminals separately. Reconnect cables, positive (+) cable first and coat terminals with petroleum jelly.

7. Always disconnect battery cables, ground cable (—) first, to prevent possible wiring damage from short outs whenever working with the electrical system.

MAINTENANCE

BATTERY STORAGE

If the machine will be stored more than 30 days, remove the battery and charge it fully. Either store it on the shelf on the machine. Leave the cables disconnected if stored on the machine. Store the battery in a cool atmosphere to avoid quick deterioration of the charge in the battery. To prevent battery from freezing, make sure it is fully charged. The specific gravity of a fully charged battery is 1.265 – 1.299.

BACKLAPPING CUTTING UNITS

The cutting units may be backlapped on the machine. Release tension to the drive belts and remove the capscrew securing the left end of the carrier frame to the cutting unit. Otherwise, remove cutting units completely before backlapping.

Connect a lapping machine to the capscrew on the left end of reel shaft with an extension coupler and a 9/16 socket. Backlap according to procedures in the Toro Sharpening Reel and Rotary Mowers Manual Form No. 80–300 PT.

⚠ CAUTION

Be careful when lapping the reel because contact with the reel or other moving parts can result in personal injury.

⚠ DANGER

Under no circumstances use a short handled paint brush. 29–9100 Handle assembly complete, or individual parts, are available from your local Authorized TORO Distributor.

IDENTIFICATION AND ORDERING

MODEL AND SERIAL NUMBER

The mower has two identification numbers: a model number and a serial number. The two numbers are stamped into a plate that is riveted to the frame at rear of mower. In any correspondence concerning the mower, supply the model and serial numbers to assure that correct information and replacement parts are obtained.

Note: Do not order by reference number if a parts catalog is being used; use the part number.

To order replacement parts from an Authorized TORO Service Dealer, supply the following information:

1. Model and serial numbers of the mower.
2. Part number, description and quantity of part(s) desired.

HYDRAULIC SCHEMATIC–Model 03420

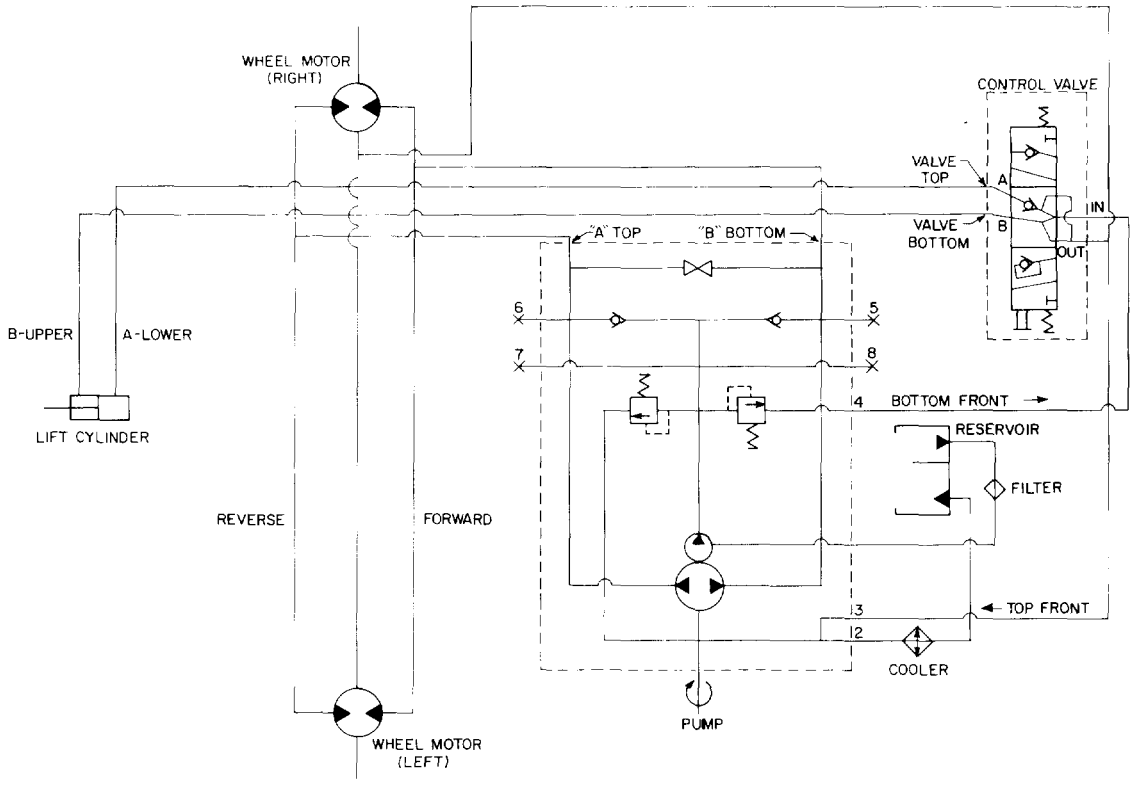

HYDRAULIC SCHEMATIC–Model 03425

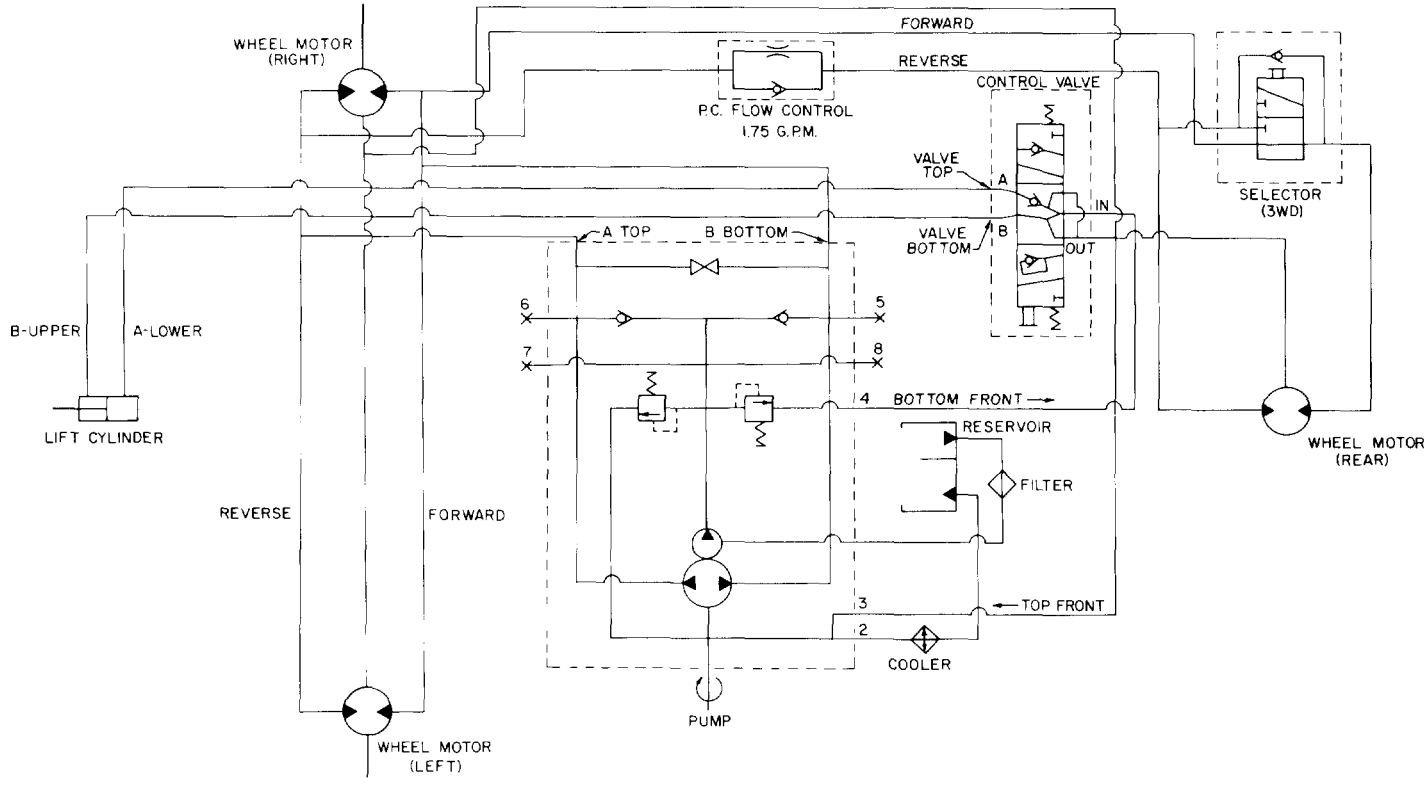

ELECTRICAL SCHEMATIC

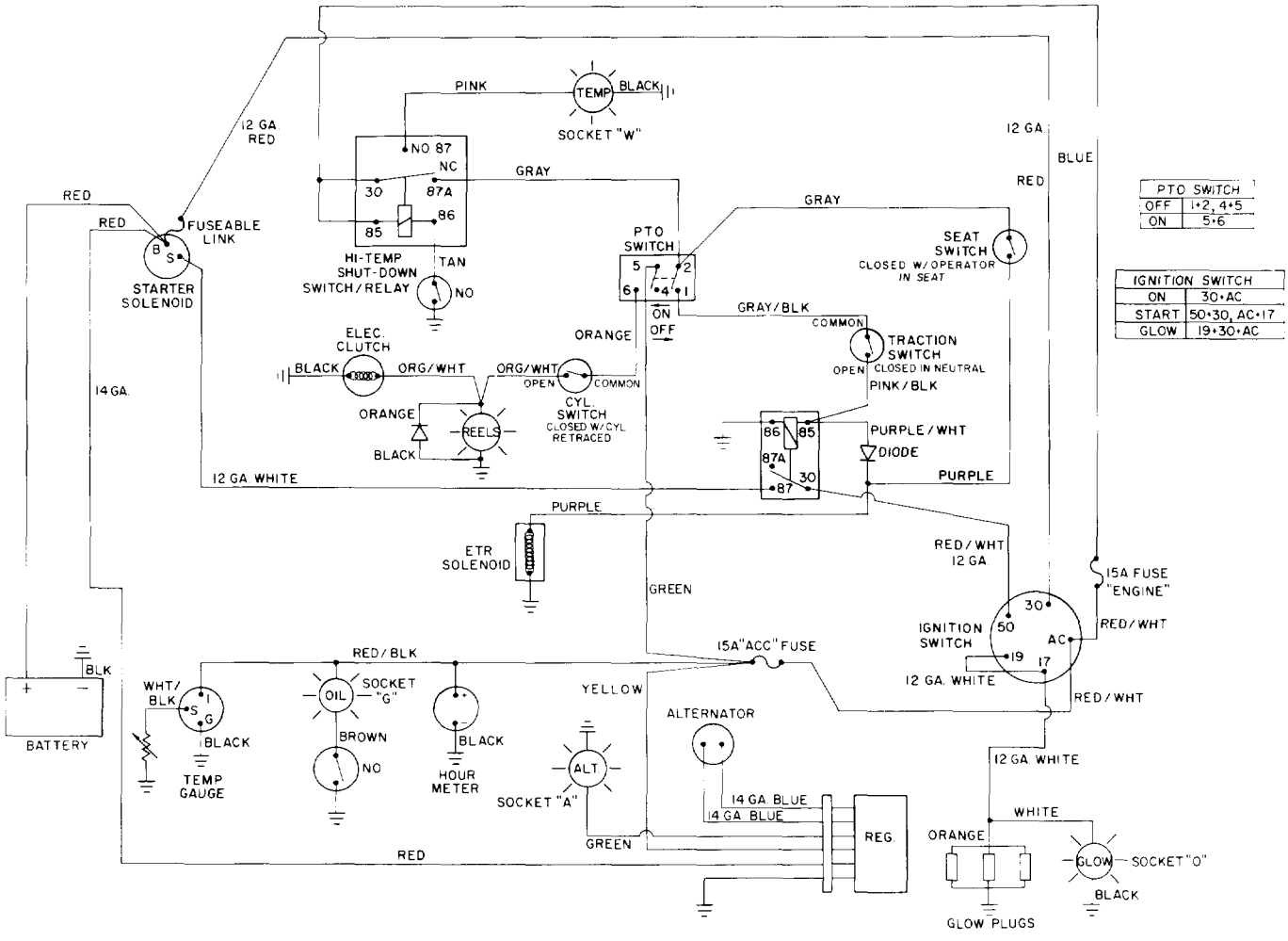

15° AND 20° SLOPE CHART

Read all safety decals and safety instructions in this manual .

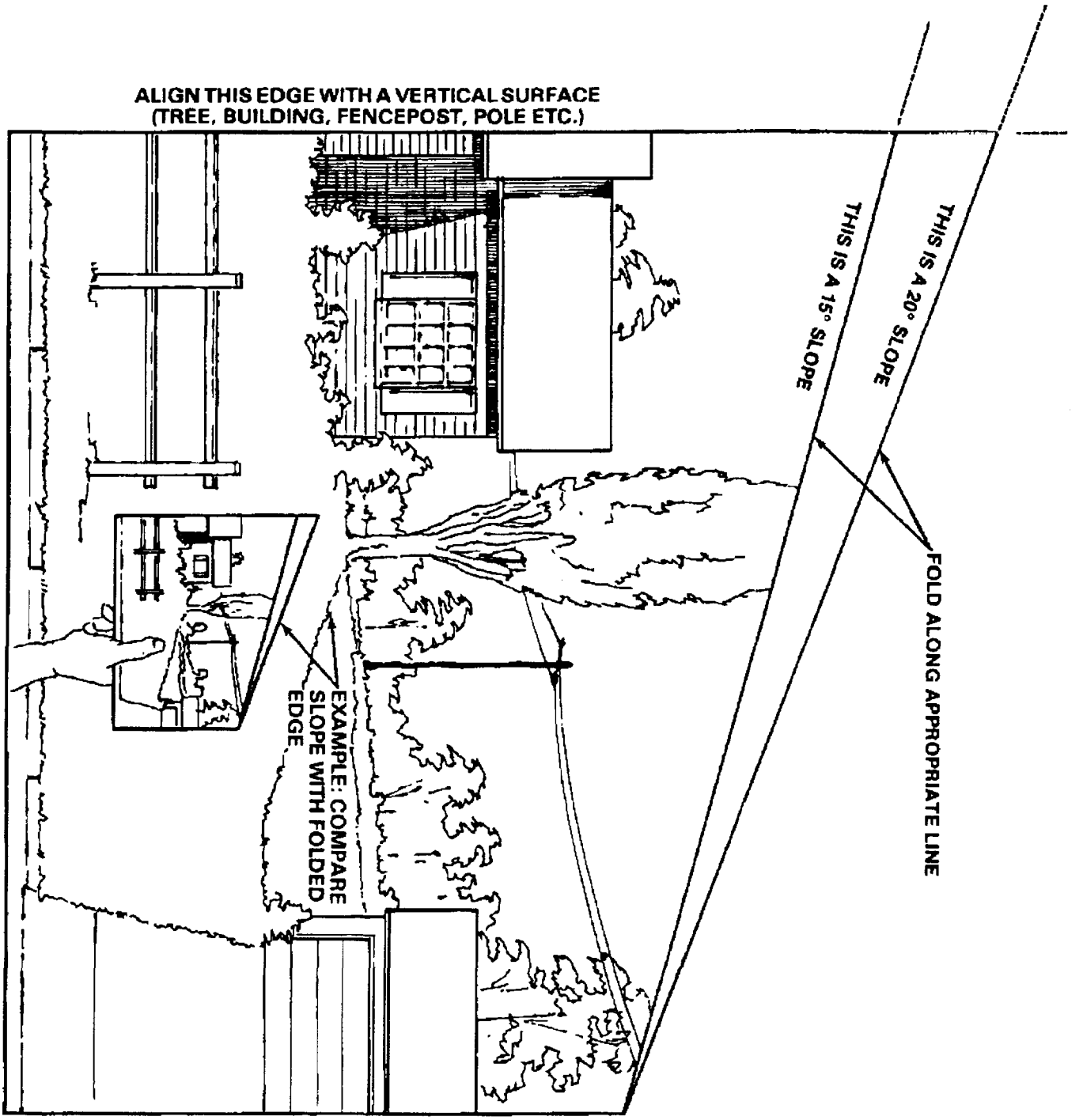

V42-746

The Toro Promise

A ONE YEAR LIMITED WARRANTY

The Toro Company promises to repair your TORO Reelmaster 216-D if defective in materials or workmanship. The following time periods from the date of purchase apply:

Commercial Products .....1 Year*
*Cutting unit drive belts.....Two years or 1500 operational hours

The costs of parts and labor are included, but the customer pays the transportation costs on walk rotary mowers with cutting unit widths of less than 25".

If you feel your TORO product is defective and wish to rely on The Toro Promise, the following procedure is recommended:

1. Contact your Authorized TORO Distributor or Commercial Dealer (the Yellow Pages of your telephone directory is a good reference source).
2. The TORO Distributor or Commercial Dealer will advise you on the arrangements that can be made to inspect and repair your product.
3. The TORO Distributor or Commercial Dealer will inspect the product and advise you whether the product is defective and, if so, make all repairs necessary to correct the defect without an extra charge to you.

If for any reason you are dissatisfied with the distributor's analysis of the defect or the service performed, you may contact us.

Write:

TORO Commercial Products Service Department
8111 Lyndale Avenue South
Minneapolis, Minnesota 55420

The above remedy of product defects through repair by an Authorized TORO Distributor or Commercial Dealer is the purchaser's sole remedy for any defect.

THERE IS NO OTHER EXPRESS WARRANTY. ALL IMPLIED WARRANTIES OF MERCHANTABILITY AND FITNESS FOR USE ARE LIMITED TO THE DURATION OF THE EXPRESS WARRANTY.

Some states do not allow limitations on how long an implied warranty lasts, so the above limitation may not apply to you.

This Warranty applies only to parts or components which are defective and does not cover repairs necessary due to normal wear, misuse, accidents, or lack of proper maintenance. Regular, routine maintenance of the unit to keep it in proper condition is the responsibility of the owner.

All warranty repairs reimbursable under the Toro Promise must be performed by an Authorized TORO Commercial Dealer or Distributor using Toro approved replacement parts.

Repairs or attempted repairs by anyone other than an Authorized TORO Distributor or Commercial Dealer are not reimbursable under the Toro Promise. In addition, these unauthorized repair attempts may result in additional malfunctions, the correction of which is not covered by warranty.

THE TORO COMPANY IS NOT LIABLE FOR INDIRECT, INCIDENTAL OR CONSEQUENTIAL DAMAGES IN CONNECTION WITH THE USE OF THE PRODUCT INCLUDING ANY COST OR EXPENSE OF PROVIDING SUBSTITUTE EQUIPMENT OR SERVICE DURING PERIODS OF MALFUNCTION OR NON-USE.

Some states do not allow the exclusion or limitation of incidental or consequential damages, so the above limitation or exclusion may not apply to you.

This warranty gives you specific legal rights, and you may also have other rights which vary from state to state.

COUNTRIES OTHER THAN THE UNITED STATES OR CANADA

Customers who have purchased TORO products exported from the United States or Canada should contact their TORO Distributor (Dealer) to obtain guarantee policies for your country, province or state. If for any reason you are dissatisfied with your Distributor's service or have difficulty obtaining guarantee information, contact the TORO importer. If all other remedies fail, you may contact us at The Toro Company.

Compliance with Radio Interference Regulations Certified.
Certifie Conforme au Reglement sur le Brouillage Radioelectrique.

Litho in U.S.A.