Form No. 3385-346 Rev A

TORO®

Count on it.

Operator's Manual

TimeCutter® MX 4260 Riding Mower

Model No. 74642—Serial No. 314000001 and Up

Register at www.Toro.com.
Original Instructions (EN)

3385-346 A

This machine is a ride-on, rotary-blade lawnmower intended to be used by homeowners in residential applications. It is primarily designed for cutting grass on well-maintained lawns. It is not designed for cutting brush, mowing grass and other growth alongside highways, or for agricultural uses.

WARNING

CALIFORNIA
Proposition 65 Warning

This product contains a chemical or chemicals known to the State of California to cause cancer, birth defects, or other reproductive harm.

The engine exhaust from this product contains chemicals known to the State of California to cause cancer, birth defects, or other reproductive harm.

Important: This engine is not equipped with a spark arrester muffler. It is a violation of California Public Resource Code Section 4442 to use or operate the engine on any forest-covered, brush-covered, or grass-covered land. Other states or federal areas may have similar laws.

This spark ignition system complies with Canadian ICES-002.

The enclosed *Engine Owner's Manual* is supplied for information regarding the US Environmental Protection Agency (EPA) and the California Emission Control Regulation of emission systems, maintenance, and warranty. Replacements may be ordered through the engine manufacturer.

For models with stated engine horsepower, the gross horsepower of the engine was laboratory rated by the engine manufacturer in accordance with SAE J1940. As configured to meet safety, emission, and operating requirements, the actual engine horsepower on this class of lawn mower will be significantly lower.

Introduction

Read this information carefully to learn how to operate and maintain your product properly and to avoid injury and product damage. You are responsible for operating the product properly and safely.

You may contact Toro directly at www.Toro.com for product and accessory information, help finding a dealer, or to register your product.

Whenever you need service, genuine Toro parts, or additional information, contact an Authorized Service Dealer or Toro Customer Service and have the model and serial numbers of your product ready. Figure 1 identifies the location of the model and serial numbers on the product. Write the numbers in the space provided.

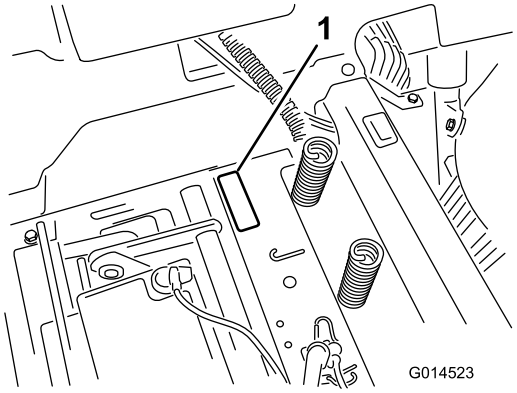

Figure 1
Under the seat

1. Model and serial number plate

Write the product model and serial numbers in the space below:

Model No. _____

Serial No. _____

This manual identifies potential hazards and has safety messages identified by the safety alert symbol (Figure 2), which signals a hazard that may cause serious injury or death if you do not follow the recommended precautions.



Figure 2

1. Safety alert symbol.

This manual uses 2 words to highlight information. **Important** calls attention to special mechanical information and **Note** emphasizes general information worthy of special attention.

© 2014—The Toro® Company
8111 Lyndale Avenue South
Bloomington, MN 55420

Contact us at www.Toro.com.
Printed in the USA.
All Rights Reserved

Contents

Introduction 2
Safety 4
Safe Operating Practices 4
Safety and Instructional Decals 6
Product Overview 10
Controls 10
Operation 11
Adding Fuel 11
Checking the Engine-oil Level 13
Breaking in a New Machine 13
Think Safety First 13
Starting the Engine 14
Operating the Blades 15
Testing the Safety-interlock System 16
Stopping the Engine 16
Driving 16
Stopping the Machine 18
Adjusting the Height-of-Cut 18
Adjusting the Anti-scalp Rollers 18
Positioning the Seat 19
Adjusting the Motion-control Levers 19
Pushing the Machine by Hand 20
Operating Tips 21
Maintenance 22
Recommended Maintenance Schedule(s) 22
Premaintenance Procedures 23
Raising the Seat 23
Lubrication 23
Greasing the Bearings 23
Engine Maintenance 24
Servicing the Air Cleaner 24
Servicing the Engine Oil 24
Servicing the Spark Plug 26
Cleaning the Blower Housing 27
Fuel System Maintenance 27
Replacing the In-line Fuel Filter 27
Electrical System Maintenance 28
Charging the Battery 28
Servicing the Fuses 30
Drive System Maintenance 30
Checking the Tire Pressure 30
Releasing the Electric Brake 31
Mower Maintenance 31
Servicing the Cutting Blades 31
Leveling the Mower Deck 34
Removing the Mower 36
Installing the Mower 37
Replacing the Grass Deflector 37
Mower Belt Maintenance 39
Inspecting the Belts 39
Replacing the Mower Belt 39
Cleaning 40
Washing the Underside of the Mower 40
Storage 41
Cleaning and Storage 41
Troubleshooting 42
Schematics 44

Safety

Improper use or maintenance by the operator or owner can result in injury. To reduce the potential for injury, comply with these safety instructions, and pay attention to the safety alert symbol , which means **Caution, Warning,** or **Danger**—"personal safety instruction." **Failure to comply with the instructions may result in personal injury or death.**

Important: This machine was manufactured according to the appropriate regulatory standards in effect at the time of manufacture. Modifying this machine in any way may cause it to be out of compliance with those standards and with the instructions in this *Operator's Manual*. Modifications to this machine should only be made by either the manufacturer or an Authorized Toro Dealer.

This product is capable of amputating hands and feet. Follow all safety instructions to avoid serious injury or death.

The owner/user can prevent and is responsible for accidents or injuries occurring to people, or damage to property.

Important: The addition of attachments made by other manufacturers that do not meet American National Standards Institute certification will cause noncompliance of this machine.

Safe Operating Practices

This product is capable of amputating hands and feet and throwing objects. Always follow all safety instructions to avoid serious injury or death.

The following instructions are adapted from ANSI standard B71.1-2012. All the language within this ANSI standard applies to this machine; however, due to the application of the standard across many different types of products some statements can seem general or misleading. In these instances, Toro has refined the statement to convey the meaning of the standard while better matching the product this *Operator's Manual* pertains. Safety information in addition to the instructions found in the ANSI standard below can be found in Toro Riding Mower Safety at the end of this section.

General Operation

- Read, understand, and follow all instructions in the operator's manual and on the machine before starting.
- Do not place hands or feet near rotating parts or under the machine. Keep clear of the discharge opening at all times.
- Allow only responsible adults who are familiar with the instructions to operate the machine.
- Clear the area of objects such as rocks, toys, wire, etc., which could be picked up and thrown by the blade.
- Be sure the area is clear of other people before mowing. Stop the machine if anyone enters the area.
- Never carry passengers.
- Do not mow in reverse unless absolutely necessary. Always look down and behind before and while backing up.
- Be aware of the mower discharge direction and do not point it at anyone. Avoid discharging material against a wall or obstruction. Material may ricochet back toward the operator. Stop the blade(s) when crossing gravel surfaces.
- Do not operate the machine without deflector, discharge cover or entire grass collection system in place and working.
- Be alert, slow down and use caution when making turns. Look behind and to the side before changing directions.
- Never leave a running machine unattended. Always turn off blades, set parking brake, stop engine, and remove key before dismounting.
- Turn off blades when not mowing. Stop the engine, wait for all parts to come to a complete stop and remove the key before cleaning the machine, removing the grass catcher or unclogging the discharge chute.
- Operate the machine only in daylight or good artificial light.
- Do not operate the machine while under the influence of alcohol or drugs.
- Watch for traffic when operating near or crossing roadways.
- Use extra care when loading or unloading the machine into a trailer or truck.
- Always wear eye protection when operating the mower.
- Always follow the recommendations for any application of counterweights.
- Lightning can cause severe injury or death. If lightning is seen or thunder is heard in the area, do not operate the machine; seek shelter.

Slope Operation

Slopes are a major factor related to loss of control and tip-over accidents, which can result in severe injury or death. Operation on all slopes requires extra caution. If you cannot back up the slope or if you feel uneasy on it, do not mow it.

- Do not mow slopes greater than 15 degrees.
- Watch for ditches, holes, rocks, dips, and rises that change the operating angle, as rough terrain could overturn the machine.
- Choose a low ground speed so you will not have to stop while operating on a slope.
- Do not mow slopes when grass is wet. Slippery conditions reduce traction and could cause sliding and loss of control.

- Always keep the drive wheels engaged when going down slopes.
- Reduce speed and use extreme caution on slopes.
- Do not make sudden turns or rapid speed changes.
- Remove or mark obstacles such as rocks, tree limbs, etc. from the mowing area. Tall grass can hide obstacles.
- Avoid sudden starts when mowing uphill because the mower may tip backwards.
- Be aware that loss of traction may occur going downhill. Weight transfer to the front wheels may cause drive wheels to slip and cause loss of braking and steering.
- Always avoid sudden starting or stopping on a slope. If tires lose traction, stop the machine, disengage the blades and proceed slowly off the slope.
- Use extreme care with grass catchers or other attachments. These can change the stability of the machine and cause loss of control.
- Do not try to stabilize the machine by putting your foot on the ground.
- Do not mow near drop-offs, ditches, steep banks or water. Wheels dropping over edges can cause rollovers, which may result in serious injury, death or drowning.
- Use a walk behind mower and/or a hand trimmer near drop-offs, ditches, steep banks or water.

Children

Tragic accidents can occur if the operator is not alert to the presence of children. Children are often attracted to the machine and the mowing activity. Never assume that children will remain where you last saw them.

- Keep children out of the mowing area and under the watchful care of another responsible adult, not the operator.
- Be alert and turn the machine off if children enter the area.
- Before and while backing or changing direction, look behind, down, and side-to-side for small children.
- Never carry children, even with the blades off. They may fall off and be seriously injured or interfere with safe machine operation.
- Children who have been given rides in the past may suddenly appear in the mowing area for another ride and be run over or backed over by the mower.
- Never allow children to operate the machine.
- Use extra care when approaching blind corners, shrubs, trees, the end of a fence or other objects that may obscure vision.

Towing Safety

- Do not attach towed equipment except at the hitch point.
- Follow the attachment manufacturer's recommendation for weight limits for towed equipment and towing on slopes. Towed weight must not exceed the weight of the machine, operator, and ballast. Use counterweights or wheel weights as described in the attachment, or in the pulling machine *Operator's Manual*.
- Never allow children or others in or on towed equipment.
- On slopes, the weight of the towed equipment may cause loss of traction, increased risk of rollover, and loss of control. Reduce the towed weight and slow down.
- Stopping distance increases with the weight of the towed load. Travel slowly and allow extra distance to stop.
- Make wide turns to keep the attachment clear of the machine.

Safe Handling of Gasoline

To avoid personal injury or property damage, use extra care when handling gasoline and other fuels. They are flammable and the vapors are explosive.

- Extinguish all cigarettes, cigars, pipes and other sources of ignition.
- Use only an approved container.
- Never remove the gas cap or add fuel when the engine is running. Allow the engine to cool before refueling.
- Never refuel the machine indoors.
- Never store the machine or fuel container inside where there is an open flame, such as near a water heater or furnace.
- Never fill containers inside a vehicle or on a truck or trailer with a plastic liner. Always place containers on the ground away from your vehicle before filling.
- Remove gas-powered equipment from the truck or trailer and refuel it on the ground. If this is not possible, then refuel such equipment with a portable container, rather than from a gasoline dispenser nozzle.
- Keep the nozzle in contact with the rim of the fuel tank or container opening at all times until the fueling is complete. Do not use a nozzle lock-open device.
- If fuel is spilled on clothing, change clothing immediately.
- Never overfill the fuel tank. Replace gas cap and tighten securely.

General Service

- Never operate a machine inside a closed area. Engine exhaust contains carbon monoxide, which is an odorless, deadly poison that can kill you.
- Keep nuts and bolts tight, especially the blade attachment bolts. Keep equipment in good condition.
- Never interfere with the intended function of a safety device or reduce the protection provided by a safety device. Check their proper operation regularly.
- Keep the machine free of grass, leaves, or other debris build-up. Clean up oil or fuel spillage fuel soaked debris. Allow the machine to cool before storing.
- Stop and inspect the equipment if you strike an object. Repair, if necessary, before restarting.

- Never make any adjustments or repairs with the engine running.
- Grass catcher components are subject to wear, damage and deterioration, which could expose moving parts or allow objects to be thrown. Frequently check components and replace with manufacturers' recommended parts, when necessary.
- Mower blades are sharp and can cut. Wrap the blade(s) or wear gloves, and use extra caution when servicing them.
- Check for proper brake operation frequently. Adjust and service as required.
- Maintain or replace safety and instruction decals as necessary.
- Use only genuine Toro replacement parts to ensure that original standards are maintained.

Safety and Instructional Decals

Safety decals and instructions are easily visible to the operator and are located near any area of potential danger. Replace any decal that is damaged or lost.

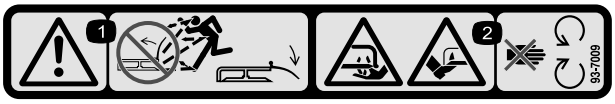

93-7009

1. Warning—don't operate the mower with the deflector up or removed; keep the deflector in place.
2. Cutting/dismemberment hazard of hand or foot, mower blade—stay away from moving parts.

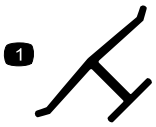

Manufacturer's Mark

1. Indicates the blade is identified as a part from the original machine manufacturer.

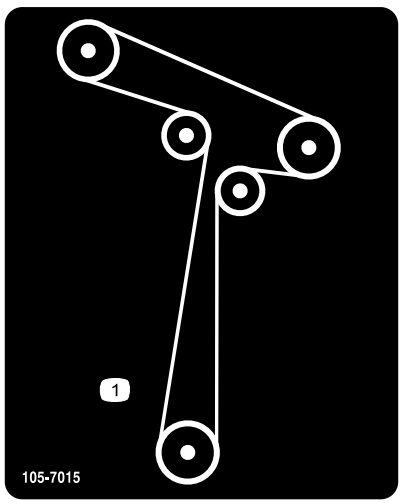

105-7015

For models with 42-inch decks

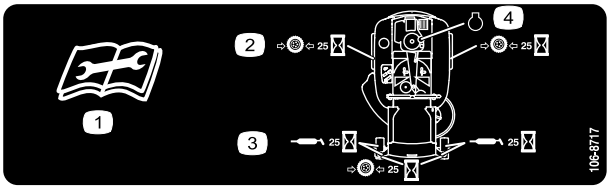

106-8717

1. Read the instructions before servicing or performing maintenance.
2. Check tire pressure every 25 operating hours.
3. Grease every 25 operating hours.
4. Engine



110-6691

1. Thrown object hazard—keep bystanders a safe distance from the machine.
2. Thrown object hazard, mower—do not operate without the deflector, discharge cover, or grass collection system in place.
3. Cutting/dismemberment of hand or foot—stay away from moving parts.

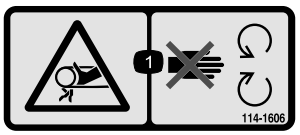

114-1606

1. Entanglement hazard, belt—keep all guards in place.

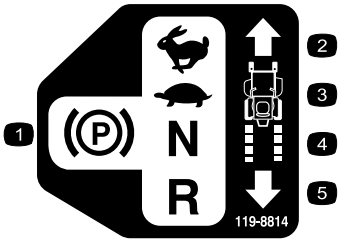

119-8814

1. Parking position
2. Fast
3. Slow
4. Neutral
5. Reverse

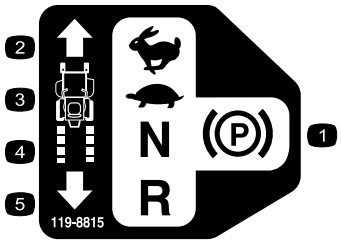

119-8815

1. Parking position
2. Fast
3. Slow
4. Neutral
5. Reverse

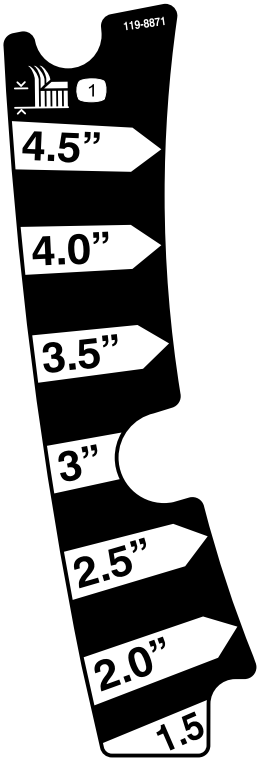

119-8871

Certain models only

1. Height-of-cut

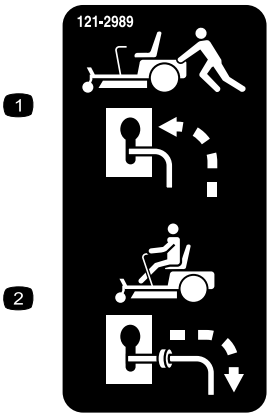

121-2989

1. Bypass lever position for pushing the machine
2. Bypass lever position for operating the machine



Battery Symbols

Some or all of these symbols are on your battery

1. Explosion hazard
2. No fire, open flame, or smoking.
3. Caustic liquid/chemical burn hazard
4. Wear eye protection
5. Read the *Operator's Manual.*
6. Keep bystanders a safe distance from the battery.
7. Wear eye protection; explosive gases can cause blindness and other injuries
8. Battery acid can cause blindness or severe burns.
9. Flush eyes immediately with water and get medical help fast.
10. Contains lead; do not discard.

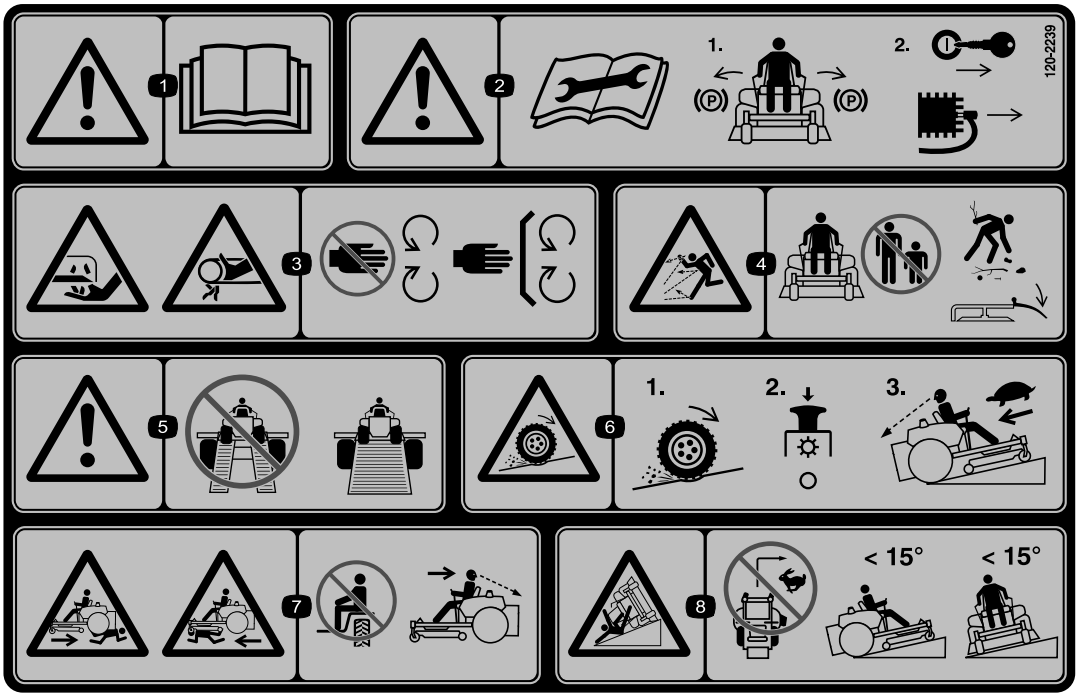

120-2239

1. Warning—read the *Operator's Manual*.
2. Warning—read the instructions before servicing or performing maintenance; move the motion control levers to the park (brake) position, remove the ignition key and disconnect the spark plug wire.
3. Cutting/dismemberment hazard, mower blade; entanglement hazard, belt—stay away from moving parts, keep all guards and shields in place.
4. Thrown object hazard—keep bystanders a safe distance from the machine, pick up debris before operating, keep deflector in place.
5. Warning—do not use split ramps, use a full ramps when transporting machine.
6. Loss of traction/control hazard, slopes—loss of traction/control on a slope, disengage the blade control switch (PTO), proceed off the slope slowly.
7. Crushing/dismemberment hazard of bystanders, reversing; crushing/dismemberment hazard of bystanders—do not carry passengers, look behind and down when reversing.
8. Tipping hazard—do not mow slopes greater than 15 degrees, avoid sudden and sharp turns while on slopes.

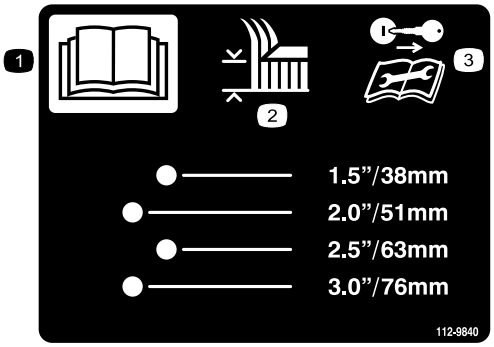

112-9840

1. Read the *Operator's Manual*.
2. Height-of-cut
3. Remove the ignition key and read the instructions before servicing or performing maintenance.

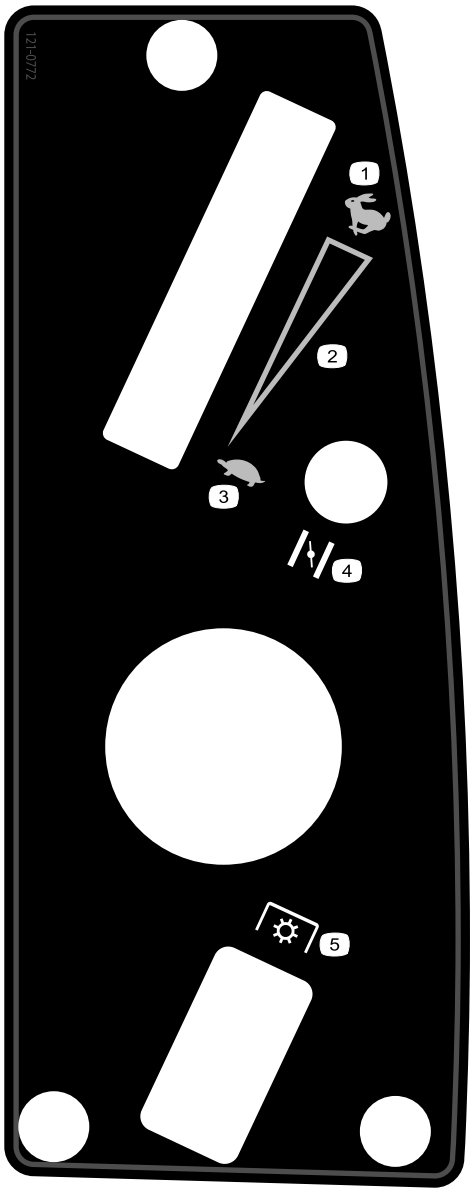

121-0772

1. Fast
2. Continuous-variable setting
3. Slow
4. Choke
5. Power take-off (PTO), blade-control switch

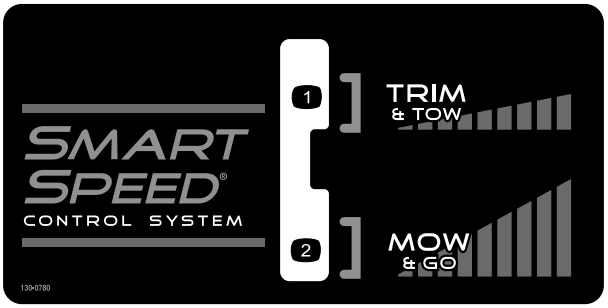

130-0780

1. Slow (trim and tow)
2. Fast (mow and go)



109-7076

Product Overview

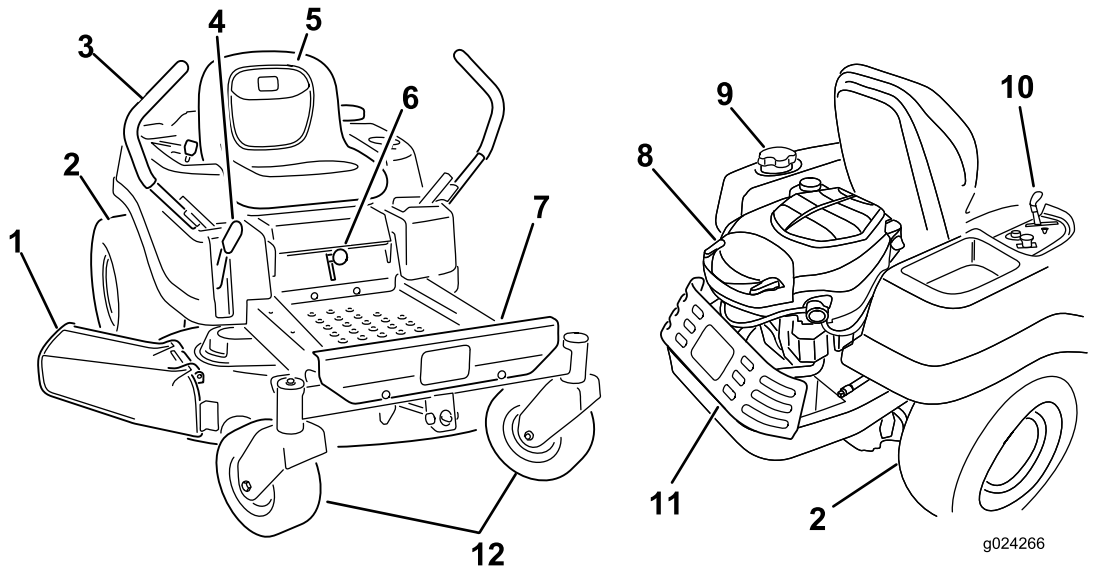

Figure 3

1. Deflector
2. Rear drive wheel
3. Motion-control levers
4. Height-of-cut lever
5. Operator seat
6. Smart Speed™ lever
7. Footrest
8. Engine
9. Fuel-tank cap
10. Control panel
11. Engine guard
12. Front caster wheel

Controls

Become familiar with all of the controls in Figure 3 and Figure 4 before you start the engine and operate the machine.

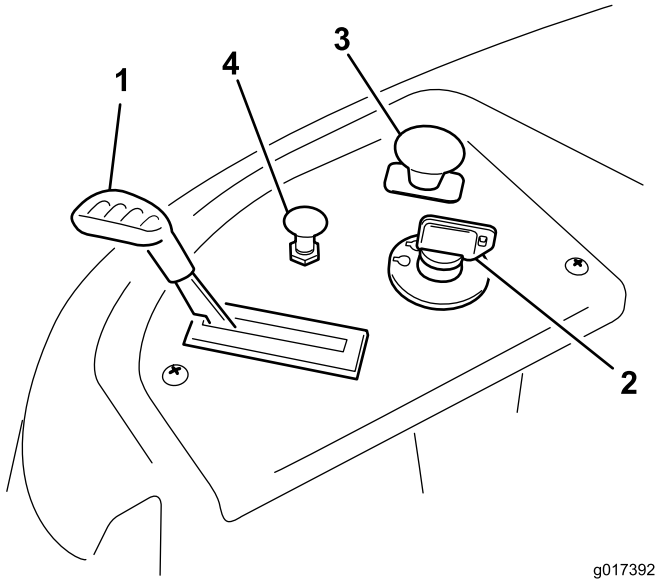

Figure 4
Control Panel

1. Throttle
2. Ignition switch
3. Blade-control switch (power take-off)
4. Choke

Ignition Switch

The ignition switch has 3 positions: Off, Run, and Start. The key will turn to Start and move back to Run upon release. Turning the key to the Off position will stop the engine; however, always remove the key when leaving the machine to prevent someone from accidentally starting the engine (Figure 4).

Throttle Control

The throttle controls the engine speed, and it has a continuous-variable setting from Slow to Fast (Figure 4).

Choke Control

Pull up on the Choke control until it stops to choke the engine (Figure 4). Push down on the Choke control for normal engine operation

Blade-control Switch (Power Take-off)

The blade-control switch, represented by a power take-off (PTO) symbol, engages and disengages power to the mower blades (Figure 4).

Motion-control Levers and Park Position

The motion-control levers are speed-sensitive controls of independent-wheel motors. Moving a lever forward or backward turns the wheel on the same side forward or in

reverse; wheel speed is proportional to the amount the lever is moved. Move the control levers outward from the center to the park position, and exit the machine (Figure 16). Always position the motion-control levers into the park position when you stop the machine or leave it unattended.

Smart Speed™ Control System Lever

The Smart Speed™ Control-System lever, located below the operating position, gives the operator a choice to drive the machine at 2 speed ranges—high and low (Figure 5).

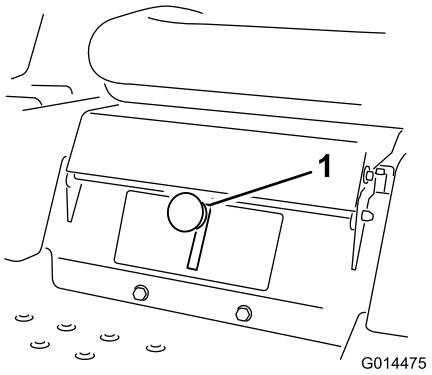

Figure 5

1. Smart-speed lever

Fuel-presence Window

The fuel window located on the left-hand side of the machine can be used to verify the presence of gasoline in the tank (Figure 6).

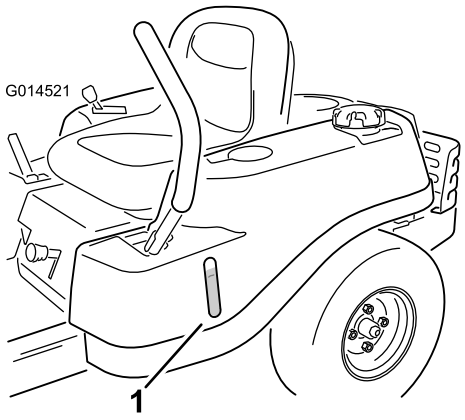

Figure 6

1. Fuel-presence window

Height-of-Cut Lever

The height-of-cut lever allows the operator to lower and raise the deck from the seated position. When the lever is moved up (toward the operator), the deck is raised from the ground, and when moved down (away from the operator), it is lowered toward the ground. Only adjust the height-of-cut while the machine is not moving (Figure 20).

Operation

Note: Determine the left and right sides of the machine from the normal operating position.

Adding Fuel

- For best results, use only clean, fresh (less than 30 days old), unleaded gasoline with an octane rating of 87 or higher ((R+M)/2 rating method).
- **Ethanol**: Gasoline with up to 10% ethanol (gasohol) or 15% MTBE (methyl tertiary butyl ether) by volume is acceptable. Ethanol and MTBE are not the same. Gasoline with 15% ethanol (E15) by volume is not approved for use. **Never use gasoline that contains more than 10% ethanol by volume**, such as E15 (contains 15% ethanol), E20 (contains 20% ethanol), or E85 (contains up to 85% ethanol). Using unapproved gasoline may cause performance problems and/or engine damage which may not be covered under warranty.
- **Do not** use gasoline containing methanol.
- **Do not** store fuel either in the fuel tank or fuel containers over the winter unless a fuel stabilizer is used.
- **Do not** add oil to gasoline.

⚠ DANGER

In certain conditions, gasoline is extremely flammable and highly explosive. A fire or explosion from gasoline can burn you and others and can damage property.

- **Fill the fuel tank outdoors, in an open area, when the engine is cold. Wipe up any gasoline that spills.**
- **Never fill the fuel tank inside an enclosed trailer.**
- **Do not fill the fuel tank completely full. Add gasoline to the fuel tank until the level is 6 to 13 mm (1/4 to 1/2 inch) below the bottom of the filler neck. This empty space in the tank allows gasoline to expand.**
- **Never smoke when handling gasoline, and stay away from an open flame or where gasoline fumes may be ignited by a spark.**
- **Store gasoline in an approved container and keep it out of the reach of children. Never buy more than a 30-day supply of gasoline.**
- **Do not operate without entire exhaust system in place and in proper working condition.**

⚠ DANGER

In certain conditions during fueling, static electricity can be released causing a spark which can ignite the gasoline vapors. A fire or explosion from gasoline can burn you and others and can damage property.

- **Always place gasoline containers on the ground away from your vehicle before filling.**
- **Do not fill gasoline containers inside a vehicle or on a truck or trailer bed because interior carpets or plastic truck bed liners may insulate the container and slow the loss of any static charge.**
- **When practical, remove gas-powered equipment from the truck or trailer and refuel the equipment with its wheels on the ground.**
- **If this is not possible, then refuel such equipment on a truck or trailer from a portable container, rather than from a gasoline dispenser nozzle.**
- **If a gasoline dispenser nozzle must be used, keep the nozzle in contact with the rim of the fuel tank or container opening at all times until fueling is complete.**

⚠ WARNING

Gasoline is harmful or fatal if swallowed. Long-term exposure to vapors can cause serious injury and illness.

- **Avoid prolonged breathing of vapors.**
- **Keep face away from nozzle and gas tank or conditioner bottle opening.**
- **Avoid contact with skin; wash off spillage with soap and water.**

Using Stabilizer/Conditioner

Use a fuel stabilizer/conditioner in the machine to provide the following benefits:

- Keeps gasoline fresh during storage of 90 days or less. For longer storage it is recommended that the fuel tank be drained.
- Cleans the engine while it runs
- Eliminates gum-like varnish buildup in the fuel system, which causes hard starting

Important: Do not use fuel additives containing methanol or ethanol.

Add the correct amount of gas stabilizer/conditioner to the gas.

Note: A fuel stabilizer/conditioner is most effective when mixed with fresh gasoline. To minimize the chance of varnish deposits in the fuel system, use fuel stabilizer at all times.

Filling the Fuel Tank

Ensure that the engine is shut off and the motion controls are in the parked position.

Important: Do not overfill fuel tank. Fill the fuel tank to the bottom of the filler neck. The empty space in the tank allows the fuel to expand. Overfilling may result in fuel leakage, damage to the engine, or damage to the emissions system.

1. Clean around the fuel-tank cap and remove the cap.

   Note: You can use the fuel window to verify the presence of gasoline before filling the tank (Figure 7).

2. **Slowly** add gasoline until the fuel reaches the base of the filler neck (Figure 7).

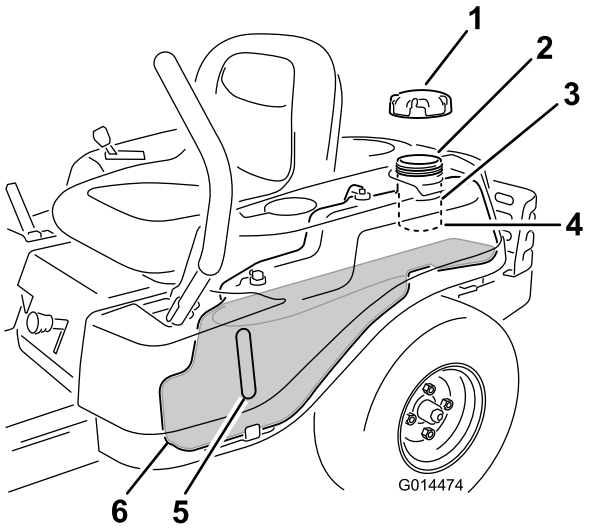

Figure 7

1. Fuel-tank cap
2. Fill opening
3. Filler neck
4. Base of the filler neck **(do not fill past here)**
5. Fuel window
6. End of the fuel tank

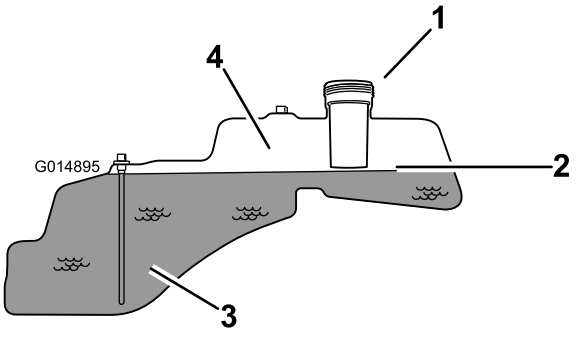

Figure 8

1. Fill opening
2. Base of the filler neck **(do not fill past here)**
3. Fuel
4. Empty space (for fuel expansion)

3. Install the fuel-tank cap securely, and tighten until it clicks.

Checking the Engine-oil Level

Before you start the engine and use the machine, check the oil level in the engine crankcase; refer to Checking the Engine-oil Level (page 24).

Breaking in a New Machine

New engines take time to develop full power. Mower decks and drive systems have higher friction when new, placing additional load on the engine. Allow 40 to 50 hours of break-in time for new machines to develop full power and best performance.

Think Safety First

Operating Safety

Please carefully read all of the safety instructions and decals in the safety section. Knowing this information could help you, your family, pets, or bystanders avoid injury.

⚠ DANGER

Mowing on wet grass or steep slopes can cause sliding and loss of control.

Wheels dropping over edges can cause rollovers, which may result in serious injury, death, or drowning.

A loss of traction is a loss of steering control.

To avoid loss of control and possibility of rollover:

- **Do not mow near drop-offs or near water.**
- **Do not mow slopes greater than 15 degrees.**
- **Reduce the speed and use extreme caution on slopes.**
- **When mowing slopes, gradually work from lower to higher areas on the incline.**
- **Avoid sudden turns or rapid speed changes.**
- **Turn up, into an incline when changing directions on slopes. Turning down the slope reduces traction.**
- **Attachments change the handling characteristics of the machine. Use extra caution when using attachments with the machine.**

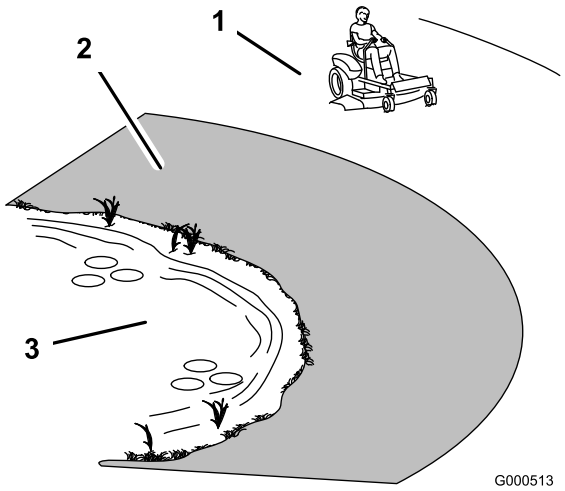

Figure 9

1. Safe zone—use the TimeCutter here
2. Use a walk-behind mower and/or hand trimmer near drop-offs and water.
3. Water

⚠ CAUTION

This machine produces sound levels in excess of 85 dBA at the operators ear and can cause hearing loss through extended periods of exposure.

Wear hearing protection when operating this machine.

The use of protective equipment for eyes, ears, feet, and head is recommended.

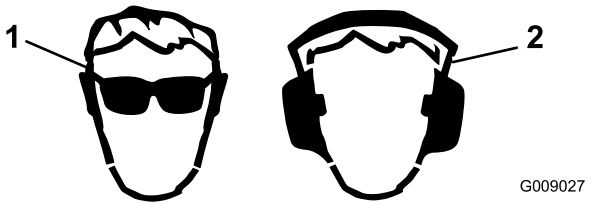

Figure 10

1. Wear safety glasses
2. Wear hearing protection

Understanding the Safety-interlock System

⚠ WARNING

If safety-interlock switches are disconnected or damaged, the machine could operate unexpectedly causing personal injury.

- **Do not tamper with the interlock switches.**
- **Check the operation of the interlock switches daily, and replace any damaged switches before operating the machine.**

The safety-interlock system is designed to prevent the engine from starting unless:

- The blades are disengaged.
- The motion-control levers are in the park position.

The safety-interlock system also is designed to stop the engine whenever the control levers are out of the park position and you rise from the seat.

Starting the Engine

1. Sit down on the seat, and move the motion controls outward to the park position.
2. Disengage the blades by moving the blade control switch to Off (Figure 11)

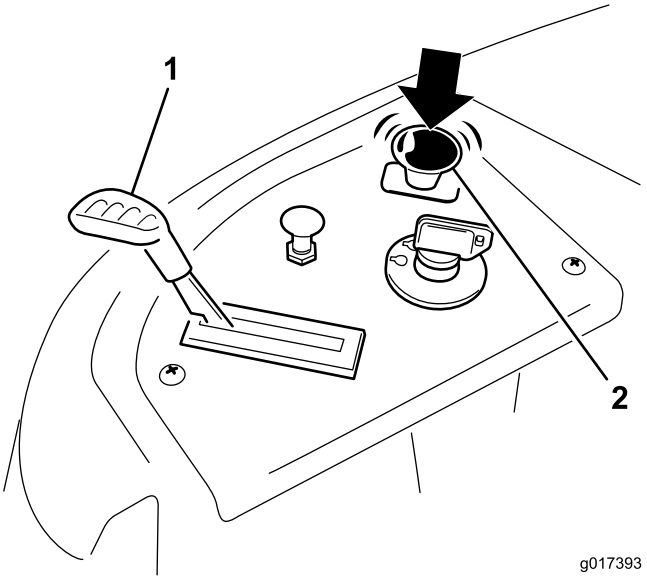

Figure 11

1. Control panel
2. Blade-control switch—Off position

3. Pull up on the Choke control before starting a cold engine (Figure 12).

   Note: A warm or hot engine may not require choking.

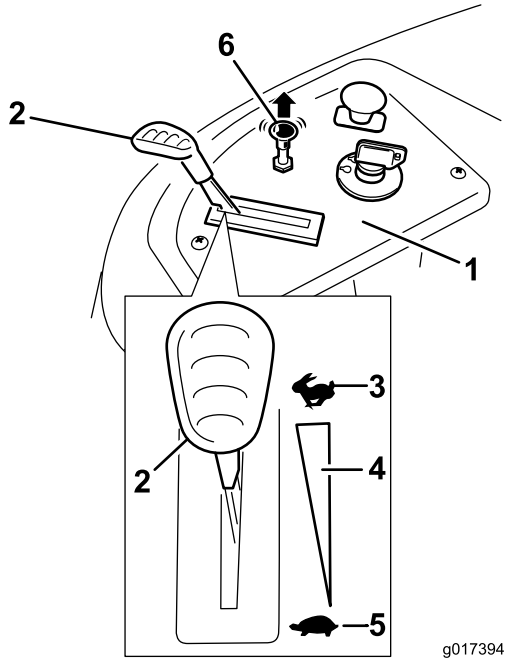

Figure 12

1. Control panel
2. Throttle
3. Fast
4. Continuous-variable setting
5. Slow
6. Choke control

4. Turn the ignition key to Start to energize the starter (Figure 13).

   Note: When the engine starts, release the key.

   Important: Do not engage the starter for more than 10 seconds at a time. If the engine fails to start, allow a 60 second cooldown period between attempts. Failure to follow these instructions can damage the starter motor.

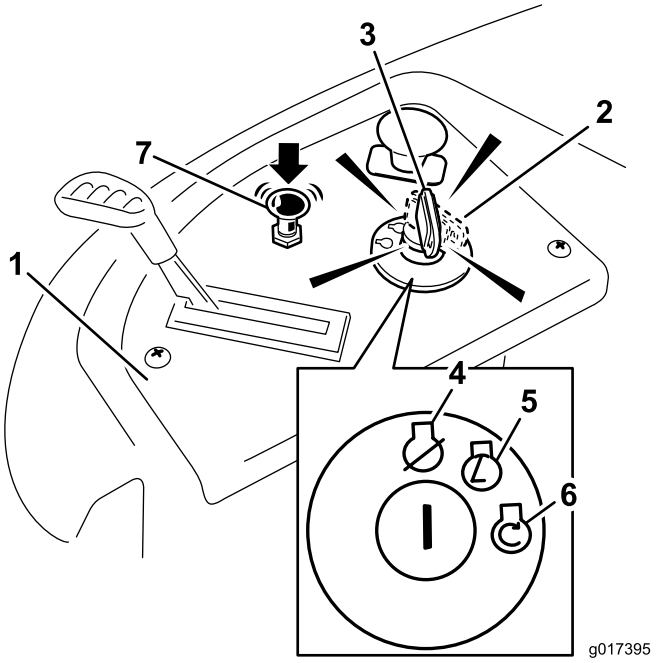

Figure 13

1. Control panel
2. Ignition key—run position
3. Ignition key—start position
4. Off
5. Run
6. Start
7. Choke control

5. After the engine starts, push down on the Choke control (Figure 13).

   Note: If the engine stalls or hesitates, pull up on the Choke control, and let the engine run for a few seconds. Then, push down on the Choke control. Repeat this as required.

Operating the Blades

The blade-control switch, represented by a power take-off (PTO) symbol, engages and disengages power to the mower blades. This switch controls power to any attachments that draw power from the engine, including the mower deck and cutting blades.

Engaging the Blades

Important: Do not engage the blades when parked in tall grass. Belt or clutch damage can occur.

1. Release pressure on the motion-control levers and place the machine in neutral.
2. Move the throttle to the Fast position.

   Note: Always engage the blades with the throttle in the Fast position.

3. Pull up on the blade-control switch to move it to the On position, and engage the blades (Figure 14).

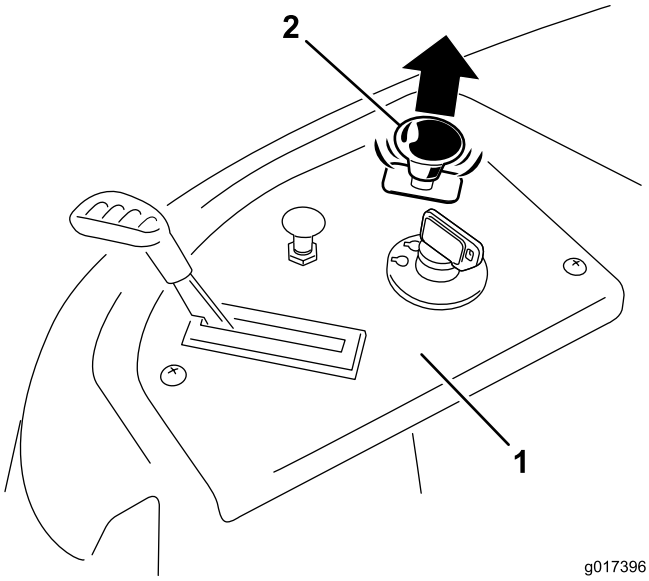

Figure 14

1. Control panel
2. Blade-control switch—On position

Disengaging the Blades

Push down on the blade-control switch to move it to the Off position, and disengage the blades (Figure 15).

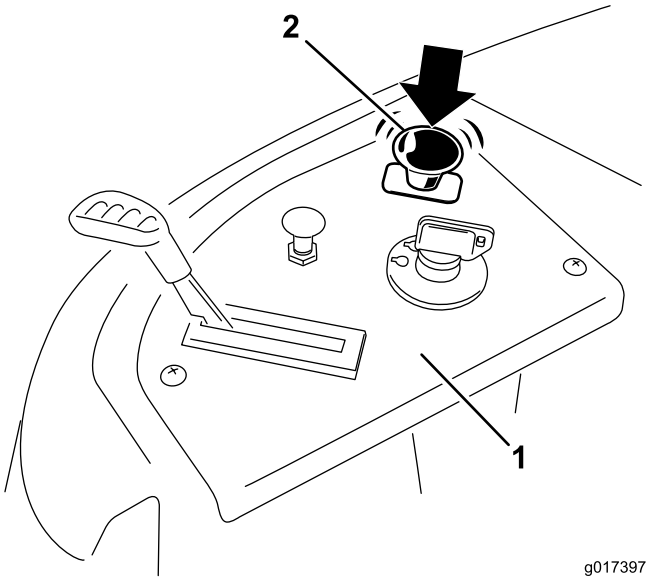

Figure 15

1. Control panel
2. Blade-control switch—Off

Testing the Safety-interlock System

Test the safety-interlock system before you use the machine each time. If the safety system does not operate as described below, have an Authorized Service Dealer repair the safety system immediately.

1. While sitting on the seat, with the control levers in park position, and move the blade-control switch to On.
2. Try starting the engine; the engine should not crank.
3. While sitting on the seat, move the blade-control switch to Off.
4. Move either motion-control lever to the center, unlocked position.
5. Try starting the engine; the engine should not crank.
6. Repeat with the other motion-control lever.
7. While sitting on the seat, move the blade-control switch to Off, and lock the motion-control levers in the park position.
8. Start the engine.
9. While the engine is running, engage the blade-control switch, and rise slightly from the seat.

   Note: The engine should stop.
10. While sitting on the seat, move the blade-control switch to Off, and lock the motion-control levers in the park position.
11. Start the engine.
12. While the engine is running, move the motion-control levers to the center, unlocked position, engage the blade-control switch, and rise slightly from the seat.

    Note: The engine should stop.

Stopping the Engine

1. Move the throttle lever to the Slow position.
2. Lower the engine speed to idle speed, and allow it to run for at least one minute.
3. Disengage the blades by moving the blade-control switch to Off (Figure 15).
4. Turn the ignition key to Off (Figure 13) and remove the key.

Driving

Driving the machine benefits from an understanding of what zero-turn-radius mower means. The drive wheels turn independently, powered by hydraulic motors on each axle; hence one side can turn in reverse while the other turns forward causing the machine to spin rather than turn. This vastly improves the machine maneuverability but may require some adjustment if the operator is unfamiliar with the machine.

⚠ WARNING

The machine can spin very rapidly. The operator may lose control of the machine and cause personal injury or damage to the machine.

- **Use caution when making turns.**
- **Slow the machine down before making sharp turns.**

The throttle control regulates the engine speed as measured in rpm (revolutions per minute). Placing the throttle control in the Fast position can be best for performance. For most applications, operating in the full-throttle position is desirable.

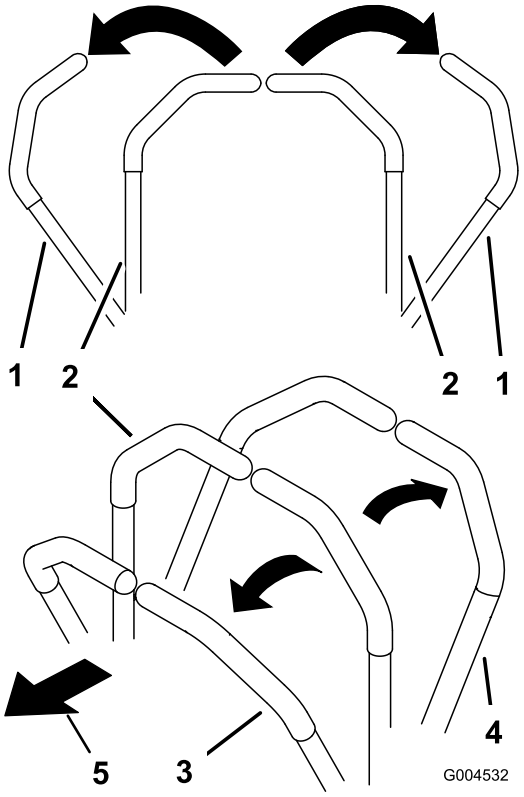

Figure 16

1. Park (brake) position
2. Center, unlock position
3. Forward
4. Backward

Using the Smart Speed™ Control System

The Smart Speed™ Control-System lever, located below the operating position (Figure 17), gives the operator a choice to drive the machine at 2 ground speed ranges—high and low.

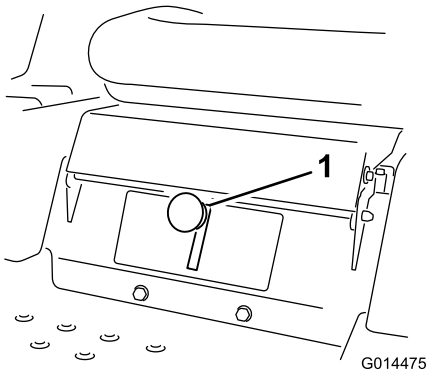

Figure 17

1. Smart-speed lever

To change speeds:

1. Move the motion control levers to neutral and outward to the park position; disengage the blade control switch.

   ⚠ WARNING

   Removing your hands from the motion-control levers while the machine is in motion can result in a loss of control causing harm to you or bystanders.

   Always stop the machine and move the motion-control levers to the park position before adjusting the Smart Speed™ Control System.

2. Adjust the lever to the desired position.

Driving Forward

1. Move the levers to the center, unlocked position.
2. To go forward, slowly push the motion-control levers forward (Figure 16).

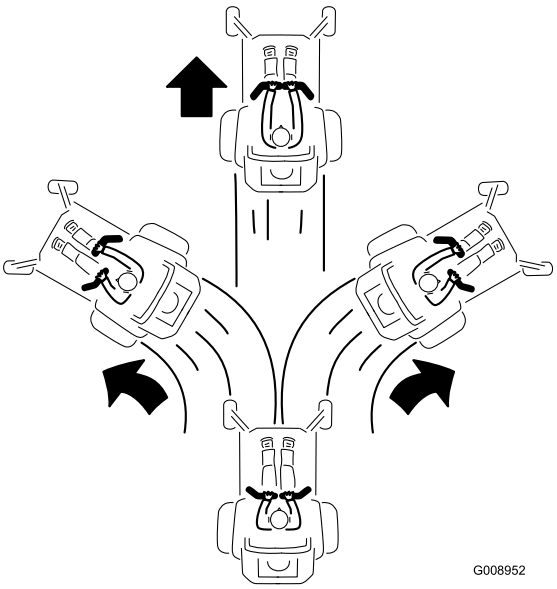

Figure 18

To go straight, apply equal pressure to both motion-control levers (Figure 16).

To turn, release pressure on the motion-control lever toward the direction you want to turn (Figure 16).

The farther you move the motion-control levers in either direction, the faster the machine will move in that direction.

To stop, pull the motion-control levers to the Neutral position.

Driving Backward

1. Move the levers to the center, unlocked position.
2. To go backward, look behind you and down, as you slowly pull the motion-control levers rearward (Figure 19).

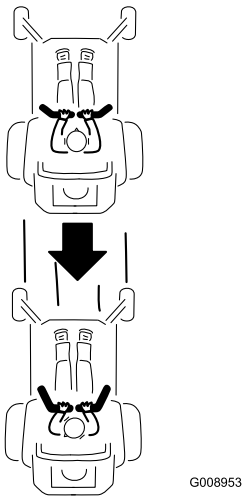

Figure 19

To go straight, apply equal pressure to both motion-control levers (Figure 19).

To turn, release the pressure on the motion-control lever toward the direction you want to turn.

To stop, push the motion-control levers to the Neutral position.

Stopping the Machine

To stop the machine, move the motion-control levers to neutral and outward to the park position, disengage the blade-control switch, ensure the throttle is in the Fast position, and turn the ignition key to off.

Note: Remember to remove the key from the ignition switch.

⚠ WARNING

Children or bystanders may be injured if they move or attempt to operate the mower while it is unattended.

Always remove the ignition key and move the motion-control levers outward to the park position when leaving the machine unattended, even if just for a few minutes.

Adjusting the Height-of-Cut

Height-of-cut is controlled by the lever located to the right of the operating position (Figure 20).

1. Pull up and inward on the lever to move it to the desired cutting position.
2. Once at the desired cutting position, slowly lower the lever until it engages the position.

The transport position is the highest height-of-cut position or cutting height 115 mm (4.5 inches) as shown in Figure 20.

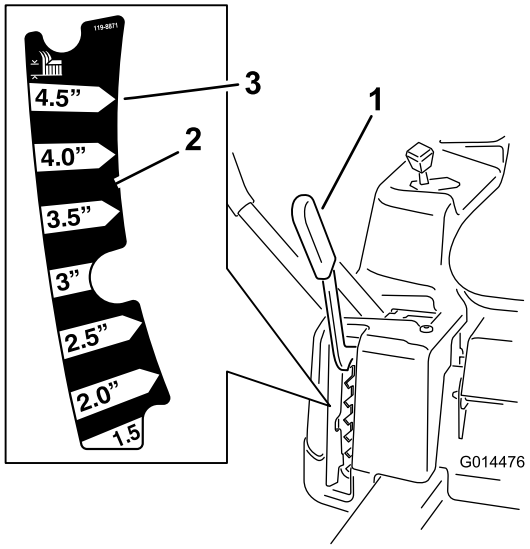

Figure 20

1. Height-of-cut lever
2. Height-of-cut positions
3. 115 mm (4.5 inches), transport position

Adjusting the Anti-scalp Rollers

Whenever you change the height-of-cut, it is recommended to adjust the height of the anti-scalp rollers.

Note: Adjust the anti-scalp rollers so the rollers do not touch the ground in normal, flat mowing areas.

1. Disengage the blade-control switch (PTO), move the motion-control levers to the neutral-lock position, and set the parking brake.
2. Stop the engine, remove the key, and wait for all moving parts to stop before leaving the operating position.
3. Adjust the anti-scalp rollers as shown in Figure 21 to match the closest height-of-cut position.

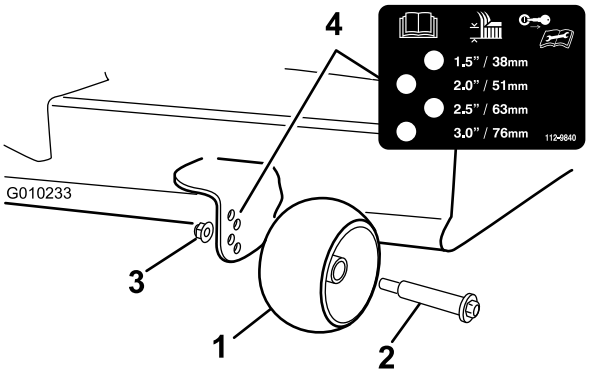

Figure 21

1. Anti-scalp roller
2. Bolt
3. Flange nut
4. Hole spacing

Positioning the Seat

The seat can move forward and backward. Position the seat where you have the best control of the machine and are most comfortable.

1. Raise the seat, and loosen the adjustment bolts just enough so that the seat can move (Figure 22).

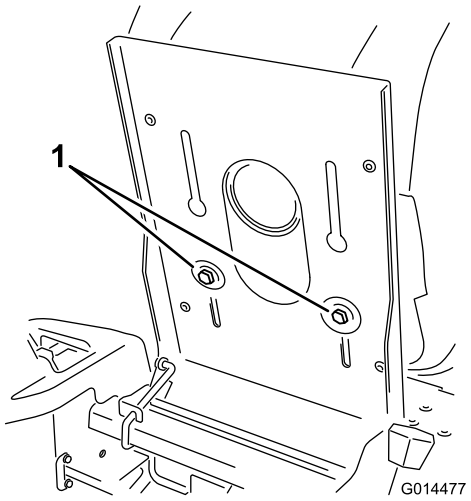

Figure 22

1. Adjustment bolts

2. Move the seat to the desired position and tighten the bolts.

Adjusting the Motion-control Levers

Adjusting the Height

The motion-control levers can be adjusted higher or lower for maximum operator comfort.

1. Remove the 2 bolts holding the control lever to the control-arm shaft (Figure 23).
2. Move the control lever to the next set of holes.
3. Secure the lever with the 2 bolts (Figure 23).

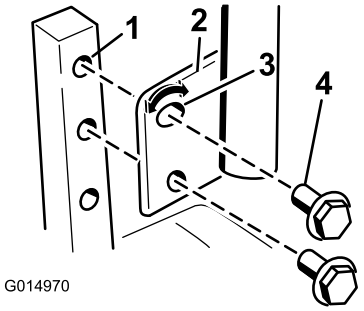

Figure 23

1. Control-arm shaft
2. Control lever
3. Slotted, upper hole
4. Bolt

4. Repeat the adjustment for the opposite control lever.

Adjusting the Tilt

The motion-control levers can be tilted fore or aft for maximum operator comfort.

1. Loosen the upper bolt holding the control lever to the control-arm shaft.
2. Loosen the lower bolt just enough to pivot the control lever fore or aft (Figure 23).

   Note: Tighten both bolts to secure the control in the new position.
3. Repeat the adjustment for the opposite control lever.

Pushing the Machine by Hand

Important: Always push the machine by hand. Do not tow the machine, because damage may occur.

This machine has an electric-brake mechanism, and to push the machine, the ignition key needs to be in the Run position. The battery needs to be charged and functioning for the electric brake to be disengage.

Pushing the Machine

1. Park the machine on a level surface, and disengage the blade-control switch.
2. Move the motion-control levers outward to the park position, stop the engine, and wait for all moving parts to stop before leaving the operating position.
3. Locate the bypass levers on the frame on both sides of the engine.
4. Move the bypass levers forward through the key hole and down to lock them in place (Figure 24).

   Note: Ensure this is done for each lever.
5. Move the motion-control levers inward to the neutral position and turn the ignition key to the Run position.

   Note: Do not start the machine.

   Note: You can now push the machine by hand.

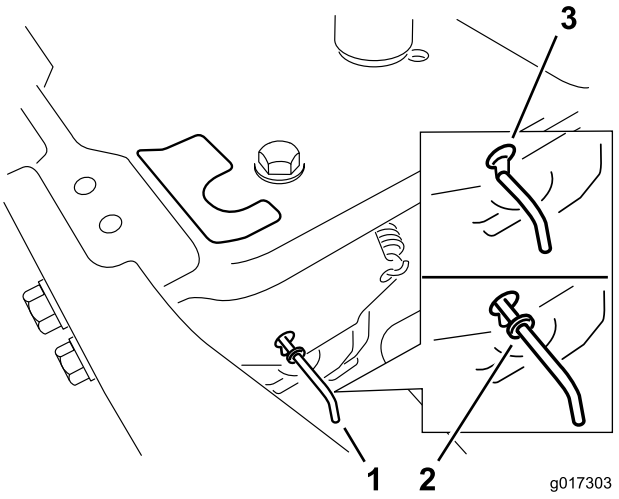

Figure 24

1. Bypass-lever locations
2. Lever position for operating the machine
3. Lever position for pushing the machine

6. When finished, ensure that the key returns to the Stop position to avoid draining the battery charge.

Note: If the machine fails to move, the electric brake may still be engaged. If necessary, the electric brake can release manually; refer to Releasing the Electric Brake (page 31).

Operating the Machine

Move the bypass levers rearward through the key hole and down to lock them in place as shown in Figure 24.

Note: Ensure this is done for each lever.

Operating Tips

Using the Fast Throttle Setting

For best mowing and maximum air circulation, operate the engine at the Fast throttle position. Air is required to thoroughly cut grass clippings, so do not set the height-of-cut so low as to totally surround the mower by uncut grass. Always try to have one side of the mower free from uncut grass, which allows air to be drawn into the mower.

Using the Smart Speed™ Control System

The Smart Speed™ Control-System lever, located below the operating position, gives the operator a choice to drive the machine at 2 speed ranges—high and low. An operator can benefit from the lower speed setting when maneuvering the machine in tight spaces or operating around delicate landscapes. The low setting can also operate the machine at a high throttle setting and blade speed, while still being able to reduce the ground speed to increase the quality of cut.

Cutting a Lawn for the First Time

Cut grass slightly longer than normal to ensure that the cutting height of the mower does not scalp any uneven ground. However, the cutting height used in the past is generally the best one to use. When cutting grass longer than six inches tall, you may want to cut the lawn twice to ensure an acceptable quality of cut.

Cutting 1/3 of the Grass Blade

It is best to cut only about 1/3 of the grass blade. Cutting more than that is not recommended unless grass is sparse, or it is late fall when grass grows more slowly.

Alternating the Mowing Direction

Alternate the mowing direction to keep the grass standing straight. This also helps disperse clippings which enhances decomposition and fertilization.

Mowing at Correct Intervals

Normally, mow every 4 days. But, remember, grass grows at different rates at different times. So to maintain the same cutting height, which is a good practice, and mow more often in early spring. As the grass growth rate slows in mid summer, mow less frequently. If you cannot mow for an extended period, first mow at a high cutting height, then mow again 2 days later at a lower height setting.

Avoiding Cutting Too Low

If the cutting width of the mower is wider than the mower you previously used, raise the cutting height to ensure that uneven turf is not cut too short.

Cutting Long Grass

If the grass is allowed to grow slightly longer than normal, or if it contains a high degree of moisture, raise the cutting height higher than usual and cut the grass at this setting. Then cut the grass again using the lower, normal setting.

Stopping the Machine

If you must stop the forward motion of the machine while mowing, a clump of grass clippings may drop onto your lawn. To avoid this, move onto a previously cut area with the blades engaged or you can disengage the mower deck while moving forward.

Keeping the Underside of the Mower Clean

Clean clippings and dirt from the underside of the mower after each use. If grass and dirt build up inside the mower, cutting quality will eventually become unsatisfactory.

Maintaining the Blade(s)

Maintain a sharp blade throughout the cutting season because a sharp blade cuts cleanly without tearing or shredding the grass blades. Tearing and shredding turns grass brown at the edges, which slows growth and increases the chance of disease. Check the mower blades after each use for sharpness, and for any wear or damage. File down any nicks and sharpen the blades as necessary. If a blade is damaged or worn, replace it immediately with a genuine Toro replacement blade.

Maintenance

Note: Determine the left and right sides of the machine from the normal operating position.

Recommended Maintenance Schedule(s)

Maintenance Service Interval	Maintenance Procedure
Before each use or daily	• Check the safety-interlock system. • Check the air cleaner for dirty, loose or damaged parts. • Check the engine-oil level. • Check the cutting blades. • Inspect the grass deflector for damage
After each use	• Clean the mower housing.
Every 25 hours	• Grease all the lubrication points. • Check tire pressure. • Check the belts for wear or cracks.
Every 50 hours	• Service the paper element (more often under extremely dusty, dirty conditions).
Every 100 hours	• Replace the paper element (more often under extremely dusty, dirty conditions). • Change the engine oil and the engine-oil filter. • Clean the blower housing (more often under extremely dusty, dirty conditions). • Replace the in-line fuel filter.
Every 200 hours	• Check spark plug(s) condition and gap.
Every 500 hours	• Replace the spark plug(s).
Before storage	• Charge the battery and disconnect battery cables. • Perform all maintenance procedures listed above before storage. • Paint any chipped surfaces.

Important: **Refer to your engine owner's manual for additional maintenance procedures.**

⚠ CAUTION

If you leave the key in the ignition switch, someone could accidently start the engine and seriously injure you or other bystanders.

Remove the key from the ignition and disconnect the wire from the spark plug before you do any maintenance. Set the wire aside so that it does not accidentally contact the spark plug.

Premaintenance Procedures

Raising the Seat

Make sure that the motion-control levers are locked in the park position. Lift the seat forward.

The following components can be accessed by raising the seat:

- Serial plate
- Service decal
- Seat adjustment bolts
- Fuel filter
- Battery and battery cables

Lubrication

Greasing the Bearings

Service Interval: Every 25 hours—Grease all the lubrication points.

Grease Type: No. 2 general purpose, lithium-base grease

1. Park the machine on a level surface, and disengage the blade-control switch.
2. Move the motion-control levers outward to the park position, stop the engine, remove the key, and wait for all moving parts to stop before leaving the operating position.
3. Clean the grease fittings (Figure 25 and Figure 26) with a rag.

   Note: Make sure to scrape any paint off the front of the fitting(s).

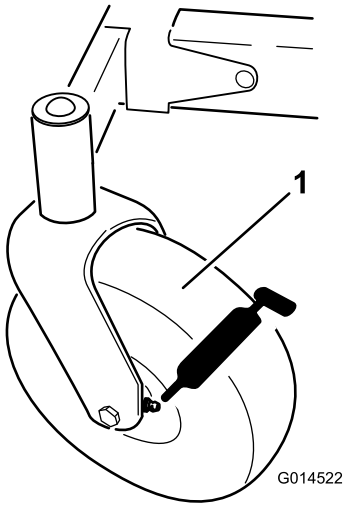

Figure 25

1. Front caster tire

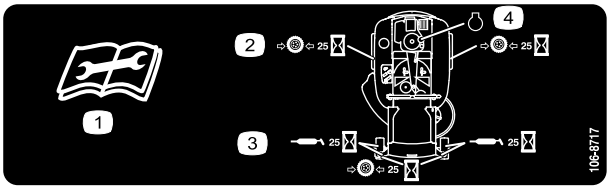

Figure 26

Located on the seat-pan underside

1. Read the instructions before servicing or performing maintenance
2. Check the tire pressure every 25 operating hours
3. Grease every 25 operating hours
4. Engine

4. Connect a grease gun to each fitting (Figure 25 and Figure 26).
5. Pump grease into the fittings until grease begins to ooze out the bearings.

Engine Maintenance

Servicing the Air Cleaner

Service Interval: Before each use or daily—Check the air cleaner for dirty, loose or damaged parts.

Every 50 hours—Service the paper element (more often under extremely dusty, dirty conditions).

Every 100 hours—Replace the paper element (more often under extremely dusty, dirty conditions).

This engine is equipped with a replaceable, high density paper air-cleaner element. Check the air cleaner daily or before starting the engine. Check for a buildup of dirt and debris around the air-cleaner system. Keep this area clean. Also, check for loose or damaged components. Replace all bent or damaged air-cleaner components.

Note: Operating the engine with loose or damaged air-cleaner components could allow unfiltered air into the engine, causing premature wear and failure.

Note: Service the air cleaner more often under extremely dusty, dirty conditions.

1. Rotate the latches outward.
2. Remove the cover to access the air-cleaner element (Figure 27).
3. Remove the element, and gently tap the element to dislodge dirt.

   Note: Do not wash the paper element or use pressurized air, as this will damage the element.

   Note: Replace a dirty, bent, or damaged element. Handle the new element carefully; do not use if the sealing surfaces are bent or damaged.
4. Clean the air-cleaner base as required, and check the condition.
5. Install the paper element onto the air-cleaner base.
6. Install the cover, and secure it with the latches (Figure 27).

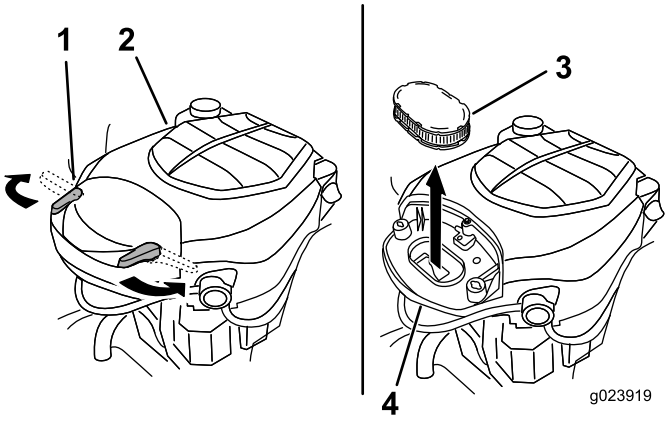

Figure 27

1. Air-cleaner latch
2. Engine
3. Paper element
4. Air-cleaner base

Servicing the Engine Oil

Oil Type: Detergent oil (API service SJ or higher)

Crankcase Capacity: 1.9 L (64 oz) when the filter is changed

Viscosity: See the table below.

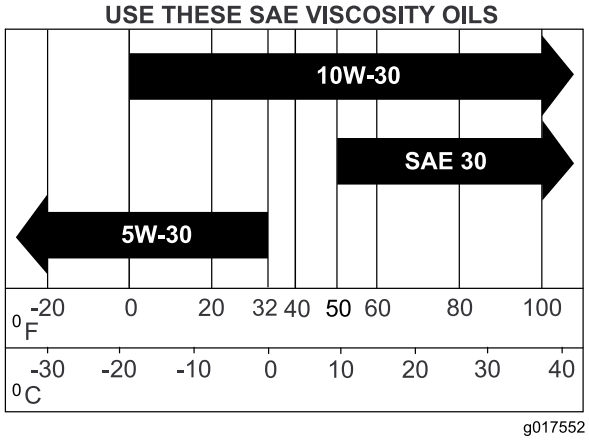

Figure 28

Checking the Engine-oil Level

Service Interval: Before each use or daily—Check the engine-oil level.

1. Park the machine on a level surface, disengage the blade-control switch, stop the engine, and remove the key.
2. Make sure that the engine is stopped, level, and is cool, so the oil has has time to drain into the sump.
3. To keep dirt, grass clippings, etc., out of the engine, clean the area around the oil-fill cap/dipstick before removing it.
4. Remove the dipstick and wipe the oil off from it (Figure 29).

5. Insert the dipstick into the tube.

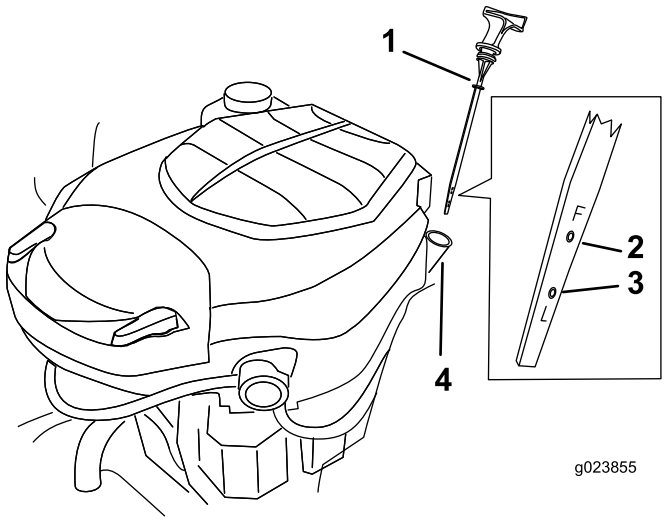

Figure 29

1. Oil dipstick
2. Oil level—Full mark
3. Oil level—Low mark
4. Filler tube

6. Pull the dipstick out, and check the oil level (Figure 29).

   Note: The oil level should be up to, but not over, the Full or F mark on the dipstick

7. If the level is low, add oil of the proper type, up to the Full or F mark on the dipstick.

   Note: Always check the level with the dipstick before adding more oil.

   Note: To prevent extensive engine wear or damage, always maintain the proper oil level in the crankcase. Never operate the engine with the oil level below the Add or L mark or above the Full or F mark on the dipstick.

8. Remove dipstick and check oil level.

   Note: The level should be between the Full or F and Add or L marks. If low, add oil of the proper type up to the full mark.

9. Install the oil-fill cap/dipstick.

Changing the Engine Oil and the Engine-oil Filter

Service Interval: Every 100 hours—Change the engine oil and the engine-oil filter.

Fill with oil as specified in the "Viscosity Grades" table (Figure 28).

Change the engine oil and the engine-oil filter while the engine is still warm. The oil will flow more freely and carry away more impurities. Make sure that the engine is level when filling, checking, or changing the oil.

Change the engine oil and the engine-oil filter as follows:

1. Park the machine, so that the drain side is slightly lower than the opposite side, to ensure that the oil drains completely.
2. Disengage the blade-control switch and move the motion controls outward to the park position.
3. Stop the engine, remove the key, and wait for all moving parts to stop before leaving the operating position.
4. Locate the oil-drain hose on the left side of the engine. (Figure 30).

   Note: The drain plug is attached to the drain hose.

5. Clean the area around the oil-drain plug and the oil-drain hose.
6. Place a drain pan underneath the machine, directly below the oil-drain hose as shown in Figure 30.

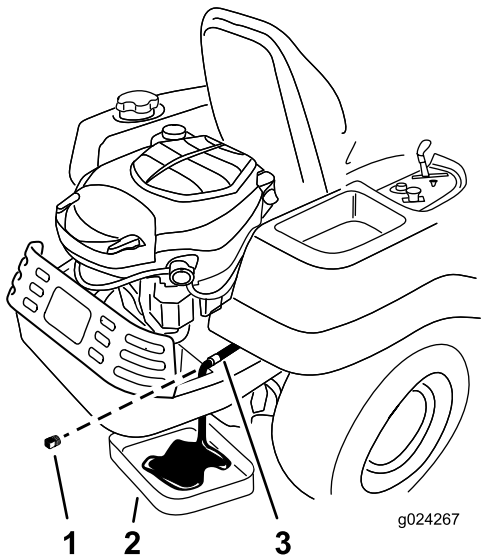

Figure 30

1. Oil-drain plug
2. Pan
3. Oil-drain hose

7. Using 2 wrenches (one to hold the oil-drain hose and one to loosen the plug), remove the oil-drain plug (Figure 30).
8. Remove the oil-fill cap/dipstick (Figure 29).
9. Allow ample time for complete drainage.

10. Locate the oil filter on the right side of the engine, and remove the old filter and wipe off the filter adapter with a clean cloth (Figure 31).

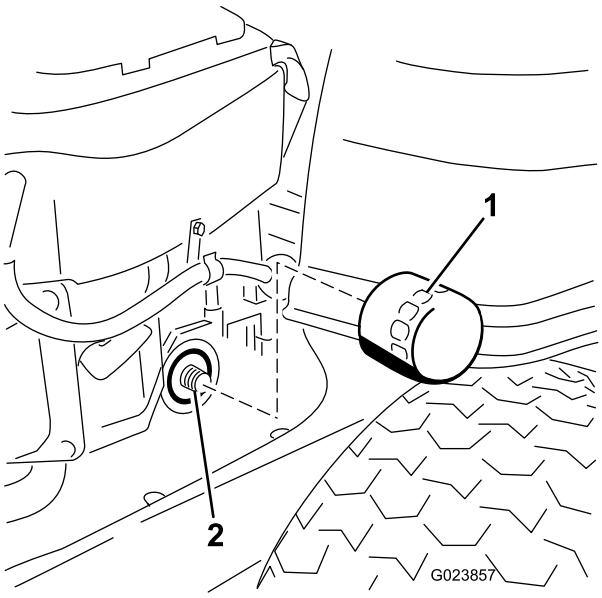

Figure 31

1. Oil filter
2. Adapter

11. Apply a thin film of clean oil to the rubber gasket on the new filter.
12. Install the replacement oil filter to the adapter.
13. Turn the oil filter clockwise until the rubber gasket contacts the pad, then tighten the filter an additional 3/4 to 1 turn (Figure 31).
14. Wipe up any excess oil on the frame.
15. When oil has drained completely, install the oil drain plug.
16. Torque the plug to 14 N-m (125 in-lb).
17. Wipe up any excess oil (Figure 30).

    Note: Dispose of the used oil at a recycling center.
18. Slowly pour approximately 80% of the specified oil into the filler tube (Figure 29).
19. Install the oil-fill cap/dipstick (Figure 29).
20. Check the oil level (Figure 29).
21. Slowly add additional oil to bring it to the Full mark.
22. Install the oil-fill cap/dipstick (Figure 29).

Servicing the Spark Plug

Service Interval: Every 200 hours—Check spark plug(s) condition and gap.

Every 500 hours—Replace the spark plug(s).

The spark plug is RFI compliant. Equivalent alternate brand plugs can also be used.

Type: Champion XC12YC (or equivalent)

Air Gap: 0.76 mm (0.03 inch)

Removing the Spark Plug

1. Disengage the blade-control switch, move the motion controls outward to the park position, stop the engine, and remove the key.
2. Before removing the spark plug(s), clean the area around the base of the plug to keep dirt and debris out of the engine.
3. Pull the wire off the spark plug(s) (Figure 32).
4. Remove the spark plug(s) and the metal washer.

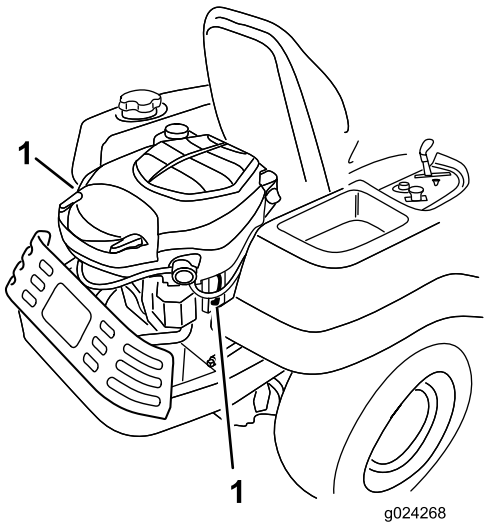

Figure 32

1. Spark plug and wire locations

Checking the Spark Plug

Important: Do not clean the spark plug(s). Always replace the spark plug(s) when it has: a black coating, worn electrodes, an oily film, or cracks.

If you see light brown or gray on the insulator, the engine is operating properly. A black coating on the insulator usually means the air cleaner is dirty.

Set the gap to 0.76 mm (0.030 inch).

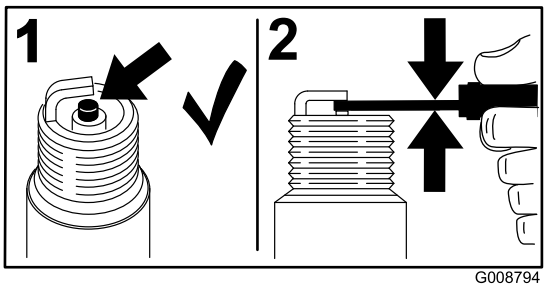

Figure 33

Installing the Spark Plug

1. Install the spark plug.

   Note: Make sure that the air gap is set correctly.
2. Tighten the spark plug to 25 to 29 N-m (18 to 22 ft-lb).
3. Push the wire onto the spark plug (Figure 32).

Cleaning the Blower Housing

To ensure proper cooling, make sure the grass screen, cooling fins, and other external surfaces of the engine are kept clean at all times.

Annually, or every 100 hours of operation (more often under extremely dusty, dirty conditions), remove the blower housing, and any other cooling shrouds. Clean the cooling fins and external surfaces as necessary. Make sure that the cooling shrouds are installed. Torque the blower housing screws to 7.5 N-m (5.5 ft-lb).

Important: Operating the engine with a blocked grass screen, dirty or plugged cooling fins, and/or cooling shrouds removed, will cause engine damage due to overheating.

Fuel System Maintenance

⚠ DANGER

In certain conditions, gasoline is extremely flammable and highly explosive. A fire or explosion from gasoline can burn you and others and can damage property.

- **Perform any fuel related maintenance when the engine is cold. Do this outdoors in an open area. Wipe up any gasoline that spills.**
- **Never smoke when draining gasoline, and stay away from an open flame or where a spark may ignite the gasoline fumes.**

Replacing the In-line Fuel Filter

Service Interval: Every 100 hours—Replace the in-line fuel filter.

Never install a dirty filter if it is removed from the fuel line.

1. Park the machine on a level surface and disengage the blade-control switch.
2. Move the motion-control levers outward to the park position, stop the engine, remove the key, and wait for all moving parts to stop before leaving the operating position.
3. Locate the fuel filter on the side of the engine (Figure 34).

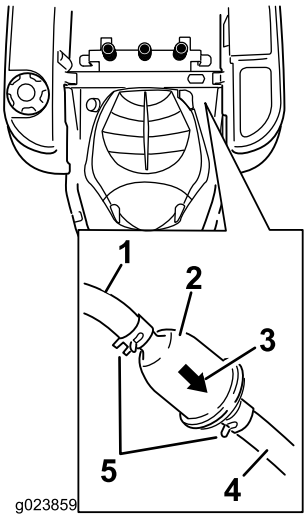

Figure 34

1. Fuel line from tank
2. In-line fuel filter
3. Flow-direction arrow
4. Fuel line to engine
5. Hose clamp

4. Squeeze the ends of the hose clamps together and slide them away from the filter (Figure 34).
5. Remove the filter from the fuel lines.
6. Install a new filter with the flow-direction arrow coming from the fuel tank and pointing to the engine.
7. Move the hose clamps close to the filter (Figure 34) to secure it in place.

Electrical System Maintenance

WARNING

CALIFORNIA
Proposition 65 Warning

Battery posts, terminals, and related accessories contain lead and lead compounds, chemicals known to the State of California to cause cancer and reproductive harm. Wash hands after handling.

Charging the Battery

Removing the Battery

⚠ WARNING

Battery terminals or metal tools could short against metal machine components causing sparks. Sparks can cause the battery gasses to explode, resulting in personal injury.

- **When removing or installing the battery, do not allow the battery terminals to touch any metal parts of the machine.**
- **Do not allow metal tools to short between the battery terminals and metal parts of the machine.**

1. Park the machine on a level surface and disengage the blade-control switch.
2. Move the motion-control levers outward to the park position, stop the engine, remove the key, and wait for all moving parts to stop before leaving the operating position.
3. Raise the seat to access the battery.
4. Disconnect the negative (black) ground cable from the battery post (Figure 35).

   Note: Retain all fasteners.

⚠ WARNING

Incorrect battery-cable routing could damage the machine and cables causing sparks. Sparks can cause the battery gasses to explode, resulting in personal injury.

- **Always disconnect the negative (black) battery cable before disconnecting the positive (red) cable.**
- **Always connect the positive (red) battery cable before connecting the negative (black) cable.**

5. Slide the rubber cover up the positive (red) cable.
6. Disconnect the positive (red) cable from the battery post (Figure 35).

   Note: Retain all fasteners.

7. Remove the battery hold-down (Figure 35), and lift the battery from the battery tray.

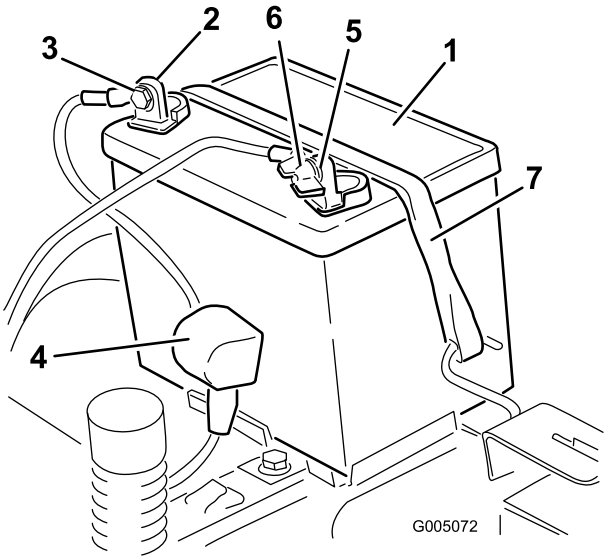

Figure 35

1. Battery
2. Positive (+) battery post
3. Bolt, washer, and nut
4. Terminal boot
5. Negative (–) battery post
6. Wing nut, washer, and bolt
7. Battery hold-down

Charging the Battery

Service Interval: Before storage—Charge the battery and disconnect battery cables.

1. Remove the battery from the chassis; refer to Removing the Battery (page 28).
2. Charge the battery for a minimum of 1 hour at 6 to 10 amps.

   Note: Do not overcharge the battery.

3. When the battery is fully charged, unplug the charger from the electrical outlet, then disconnect the charger leads from the battery posts (Figure 36).

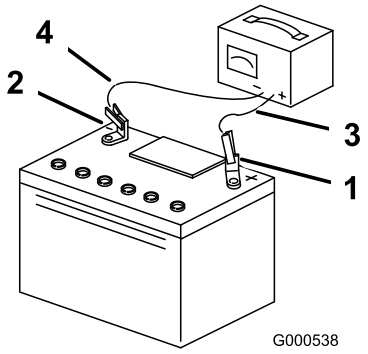

Figure 36

1. Positive (+) battery post
2. Negative (–) battery post
3. Red (+) charger lead
4. Black (–) charger lead

Note: Do not run the machine with the battery disconnected, electrical damage may occur.

Installing the Battery

1. Position the battery in the tray (Figure 35).
2. Using the fasteners previously removed, install the positive (red) battery cable to the positive (+) battery terminal.
3. Using the fasteners previously removed, install the negative battery cable to the negative (-) battery terminal.
4. Slide the red terminal boot onto the positive (red) battery post.
5. Secure the battery with the hold-down (Figure 35).
6. Lower the seat.

Servicing the Fuses

The electrical system is protected by fuses. It requires no maintenance; however, if a fuse blows, check the component/circuit for a malfunction or short.

Fuse type:

- Main—F1-30 amp, blade-type
- Charge Circuit—F2-25 amp, blade-type

1. Remove the screws securing the control panel to the machine.

   Note: Retain all fasteners.

2. Lift the control pane up to access the main wiring harness and fuse block (Figure 37).
3. To replace a fuse, pull out on the fuse to remove it (Figure 37).

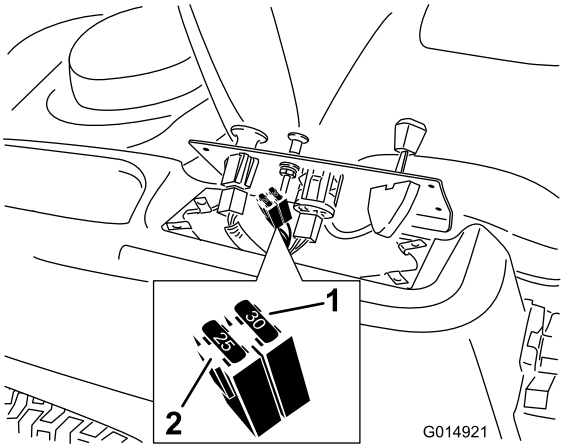

Figure 37

1. Main—30 amp
2. Charge circuit—25 amp

4. Return the control panel to its original position.

   Note: Use the screws removed previously to secure the panel to the machine.

Drive System Maintenance

Checking the Tire Pressure

Service Interval: Every 25 hours—Check tire pressure.

Maintain the air pressure in the front and rear tires as specified. Uneven tire pressure can cause uneven cut. Check the pressure at the valve stem (Figure 38). Check the tires when they are cold to get the most accurate pressure reading.

Refer to the maximum pressure suggested by the tire manufacturer on the sidewall of the caster wheel tires.

Inflate the rear drive-wheel tires to 82 kPa (12 psi).

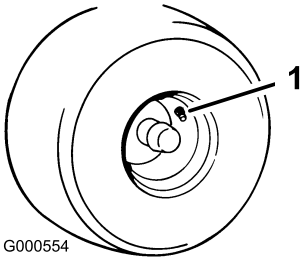

Figure 38

1. Valve stem

Releasing the Electric Brake

The electric brake releases by manually rotating the link arms forward. Once the electric brake is energized, the brake will reset.

1. Locate the shaft on the electric brake where the brake-link arms are connected (Figure 39).
2. Rotate the shaft forward to release the brake.

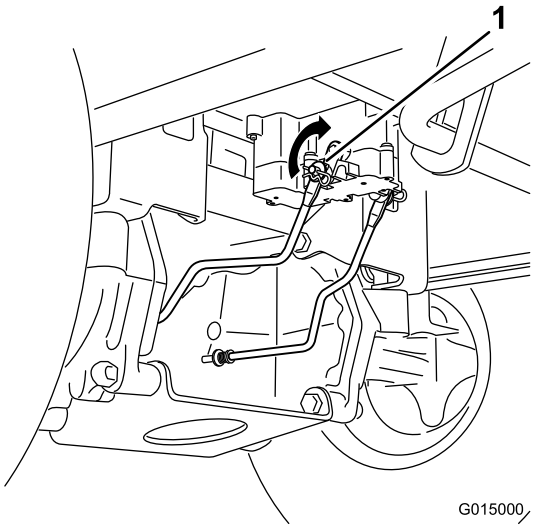

Figure 39

1. Brake-link arm on the electric-brake-control module

Mower Maintenance

Servicing the Cutting Blades

Maintain sharp blades throughout the cutting season, because sharp blades cut cleanly without tearing or shredding the grass blades. Tearing and shredding turns grass brown at the edges, which slows growth, and increases the chance of disease.

Check the cutter blades daily for sharpness, and for any wear or damage. File down any nicks and sharpen the blades as necessary. If a blade is damaged or worn, replace it immediately with a genuine Toro replacement blade. For convenient sharpening and replacement, you may want to keep extra blades on hand.

⚠ WARNING

A worn or damaged blade can break, and a piece of the blade could be thrown into the operator's or bystander's area, resulting in serious personal injury or death.

- **Inspect the blade periodically for wear or damage.**
- **Replace a worn or damaged blade.**

Before Inspecting or Servicing the Blades

Park the machine on a level surface, disengage the blade-control switch, move the motion-control levers outward to the park position, stop the engine, and remove the key.

Inspecting the Blades

Service Interval: Before each use or daily—Check the cutting blades.

1. Inspect the cutting edges (Figure 40).

   Note: If the edges are not sharp or have nicks, remove and sharpen the blades; refer to Sharpening the Blades (page 33).

2. Inspect the blades, especially the curved area (Figure 40).

   Note: If you notice any damage, wear, or a slot forming in this area (item 3 in Figure 40), immediately install a new blade.

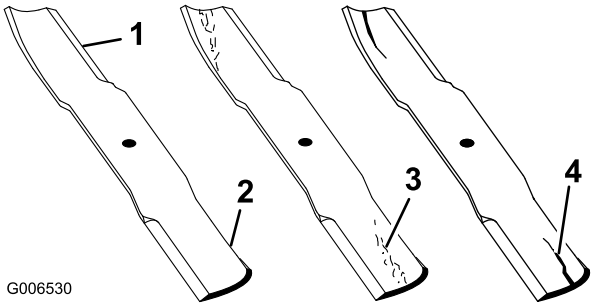

Figure 40

1. Cutting edge
2. Curved area
3. Wear/slot forming
4. Damage

Checking for Bent Blades

Note: The machine must be on a level surface for the following procedure.

1. Raise the mower deck to the highest height-of-cut position; also considered the 'transport' position.
2. While wearing thickly padded gloves, or other adequate hand protection, slowly rotate the blade to be measure into a position that allows effective measurement of the distance between the cutting edge and the level surface the machine is on (Figure 41).

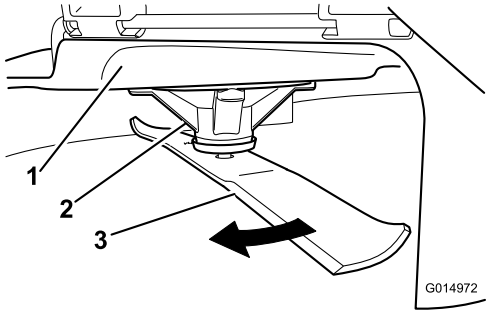

Figure 41

1. Deck
2. Spindle housing
3. Blade

3. Measure from the tip of the blade to the flat surface (Figure 42).

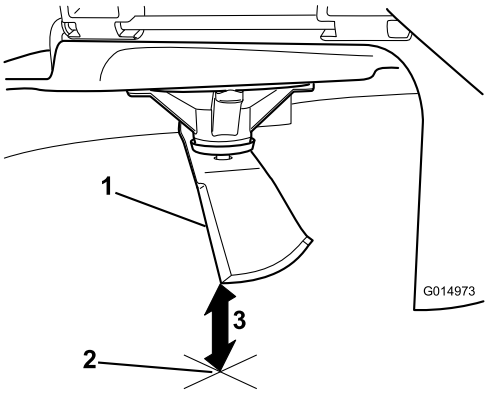

Figure 42

1. Blade (in position for measuring)
2. Level surface
3. Measured distance between blade and the surface (A)

4. Rotate the same blade 180 degrees, so that the opposing cutting edge is now in the same position (Figure 43).

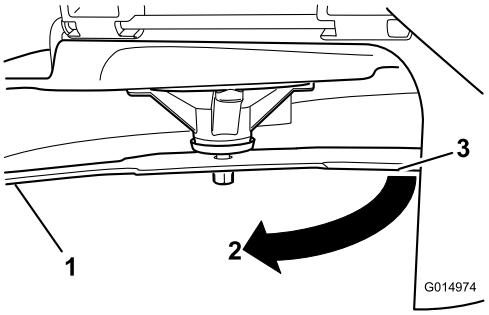

Figure 43

1. Blade (side previously measured)
2. Measurement (position used previously)
3. Opposing side of blade being moved into measurement position

5. Measure from the tip of the blade to the flat surface (Figure 44).

   Note: The variance should be no more than 3 mm (1/8 inch).

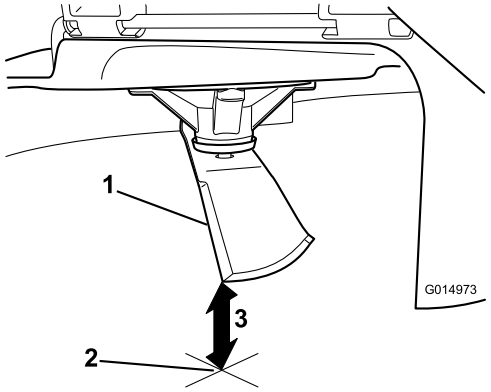

Figure 44

1. Opposite blade edge (in position for measuring)
2. Level surface
3. Second measured distance between blade and surface (B)

A. If the difference between A and B is greater than 3 mm (1/8 inch), replace the blade with a new blade; refer to Removing the Blades (page 33) and Installing the Blades (page 33).

Note: If a bent blade is replaced with a new one, and the dimension obtained continues to exceed 3 mm (1/8 inch), the blade spindle could be bent. Contact an Authorized Toro Dealer for service.

B. If the variance is within constraints, move to the next blade.

Repeat this procedure on each blade.

Removing the Blades

The blades must be replaced if a solid object is hit, if the blade is out of balance, or if the blade is bent. To ensure optimum performance and continued safety conformance of the machine, use genuine Toro replacement blades. Replacement blades made by other manufacturers may result in non-conformance with safety standards.

1. Hold the blade end using a rag or thickly-padded glove.
2. Remove the blade bolt, the curved washer, the blade stiffener, and the blade from the spindle shaft (Figure 45).

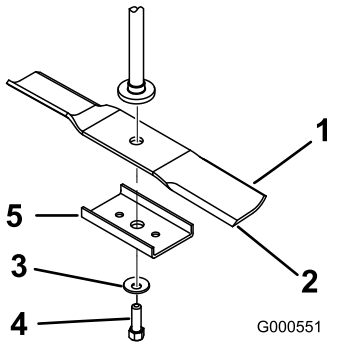

Figure 45

1. Sail area of the blade
2. Blade
3. Curved washer
4. Blade bolt
5. Blade stiffener (42-inch decks only)

Sharpening the Blades

1. Use a file to sharpen the cutting edge at both ends of the blade (Figure 46).

   Note: Maintain the original angle.

   Note: The blade retains its balance if the same amount of material is removed from both cutting edges.

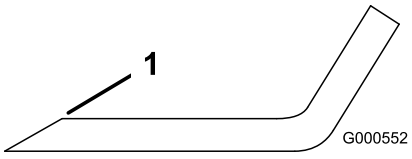

Figure 46

1. Sharpen at original angle

2. Check the balance of the blade by putting it on a blade balancer (Figure 47).

   Note: If the blade stays in a horizontal position, the blade is balanced, and can be used.

   Note: If the blade is not balanced, file some metal off the end of the sail area only (Figure 46).

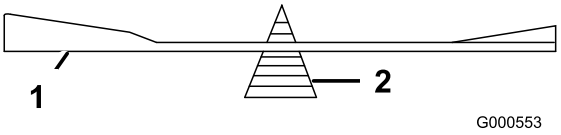

Figure 47

1. Blade
2. Balancer

3. Repeat this procedure until the blade is balanced.

Installing the Blades

1. Install the blade onto the spindle shaft (Figure 45).

   Important: The curved part of the blade must be pointing upward toward the inside of the mower to ensure proper cutting.

2. Install the blade stiffener, the curved washer (cupped side toward the blade), and the blade bolt (Figure 45).
3. Torque the blade bolt to 47 to 88 N-m (35 to 65 ft-lb).

Leveling the Mower Deck

Check to ensure that the mower deck is level any time you install the mower or when you see an uneven cut on your lawn.

The mower deck must be checked for bent blades prior to leveling; any bent blades must be removed and replaced; refer to Checking for Bent Blades (page 32) before continuing.

The mower deck must be leveled side-to-side first then the front to rear slope can be adjusted.

Requirements:

- The machine must be on a level surface.
- All 4 tires must be properly inflated; refer to Checking the Tire Pressure (page 30).

Side-to-Side Leveling

1. Park the machine on a level surface and disengage the blade-control switch.
2. Move the motion-control levers outward to the park position, stop the engine, remove the key, and wait for all moving parts to stop before leaving the operating position.
3. Set the height-of-cut lever to middle position.
4. Carefully rotate the blades so that they are all side to side (Figure 48 and Figure 49).

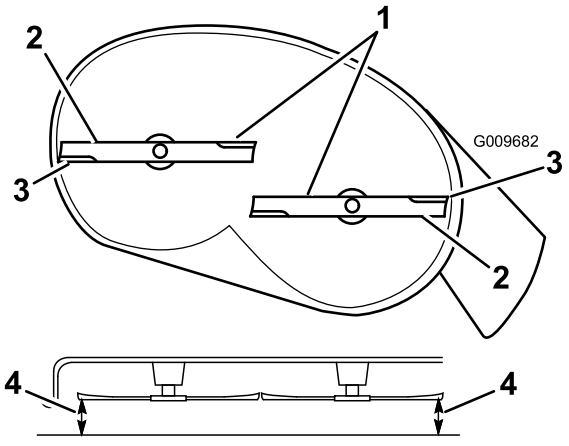

Figure 48

Mower decks with 2 blades

1. Blades side to side
2. Sail area of blade
3. Outside cutting edges
4. Measure from the tip of the blade to the flat surface here

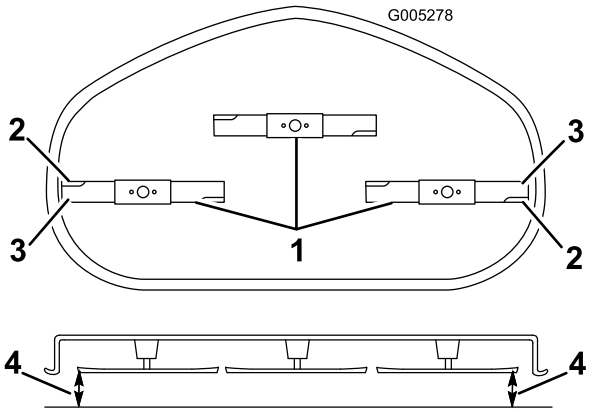

Figure 49

Mower Decks with 3 Blades

1. Blades side to side
2. Sail area of blade
3. Outside cutting edges
4. Measure from the tip of the blade to the flat surface here

5. Measure between the outside cutting edges and the flat surface (Figure 48 and Figure 49).

   Note: If both measurements are not within 5 mm (3/16 inch), an adjustment is required; continue with this procedure.

6. Support the weight of mower deck by placing wood blocks under the edges of the mower deck.

   Note: Avoid placing the supports under any anti-scalp rollers if present on the mower deck.

7. Move to the left side of the machine.

   Note: Check if the side carriage bolt is in the fixed or slotted position (Figure 50).

8. If the side carriage bolt is in the fixed position, remove the side carriage bolt and side locking nut from the fixed position and install it into the slotted adjustment position (Figure 50).

   Note: If the bolt is in the slotted position, the carriage bolt and the side locking nut require no removal.

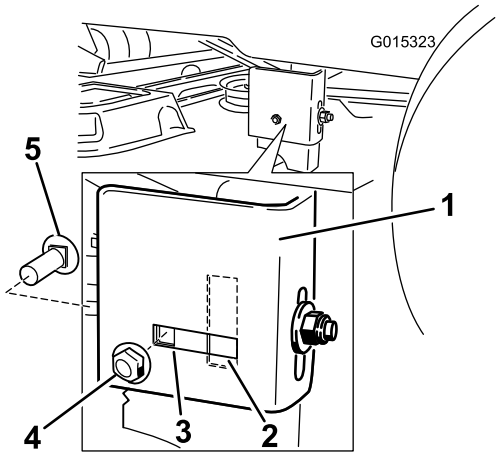

Figure 50

1. Hanger bracket
2. Slotted adjustment position
3. Fixed position
4. Side locking nut.
5. Side carriage bolt

9. Loosen the rear locking nut on the hanger bracket (Figure 51).

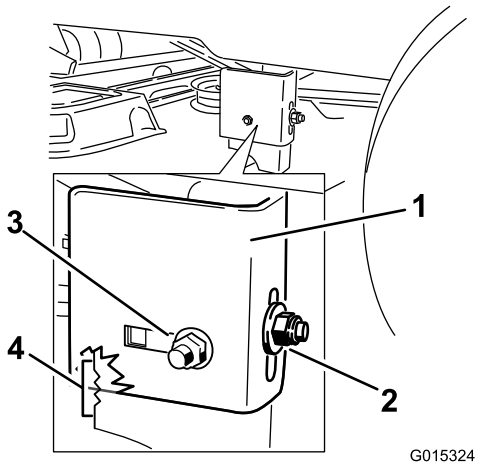

Figure 51

1. Hanger bracket
2. Rear locking nut
3. Side locking nut, slotted position.
4. Adjustment notches

10. Loosen the side locking nut on the hanger bracket just enough to allow the hanger to be adjusted (Figure 51). Use the notches on the welded bracket to measure the amount of adjustment. Each notch surface is equivalent to 6.35 mm (1/4 inch), while a single side is 3.18 mm (1/8 inch) as shown in Figure 52).
11. Adjust the height of the mower deck to the desired height.

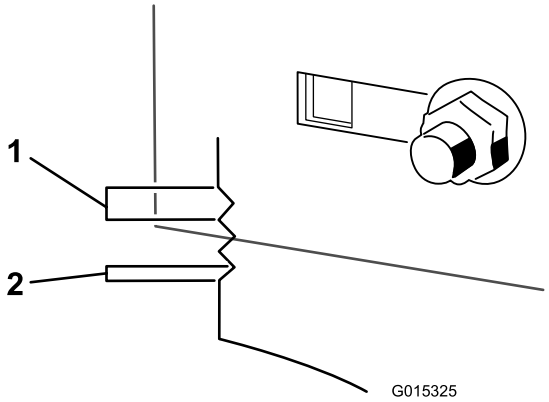

Figure 52

1. 0.25 inch
2. 0.125 inch

12. Stop the deck at the adjusted position and tighten the side locking nut on the hanger bracket to hold the new position (Figure 51).
13. Tighten the rear locking nut on the hanger bracket.
14. Continue leveling the deck by checking the front-to-rear blade slope; refer to Adjusting the Front-to-Rear Blade Slope (page 35).

Adjusting the Front-to-Rear Blade Slope

Check the front-to-rear blade level any time you install the mower. If the front of the mower is more than 7.9 mm (5/16 inch) lower than the rear of the mower, adjust the blade level using the following instructions:

1. Park the machine on a level surface and disengage the blade-control switch.
2. Move the motion-control levers outward to the park position, stop the engine, remove the key, and wait for all moving parts to stop before leaving the operating position.
3. Set the height-of-cut lever to middle position.

   Note: Check and adjust the side-to-side blade level if you have not checked the setting; refer to Side-to-Side Leveling (page 34).
4. Carefully rotate the blades so they are facing front to rear (Figure 53 and Figure 54).

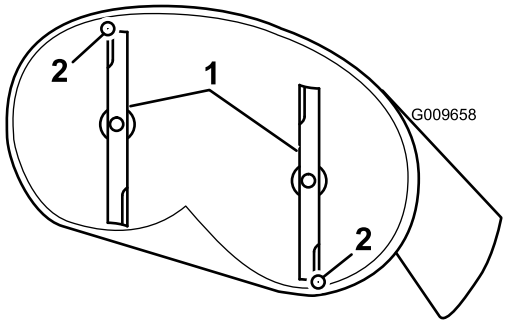

Figure 53
Mower decks with 2 blades

1. Blades front to rear
2. Measure from the tip of the blade to the flat surface here.

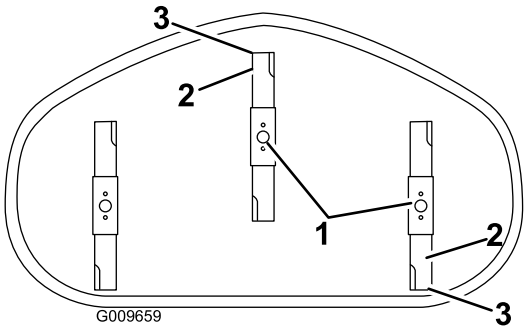

Figure 54
Mower decks with 3 blades

1. Blades front to rear
2. Outside cutting edges
3. Measure from the tip of the blade to the flat surface here

5. Measure from the tip of the front blade to the flat surface and the tip of the rear blade to the flat surface (Figure 53 and Figure 54).

   Note: If the front blade tip is not 1.6 to 7.9 mm (1/16 to 5/16 inch) lower than the rear blade tip, adjust the front locknut.

6. To adjust the front-to-rear blade slope, rotate the adjustment nut in the front of the mower (Figure 55).

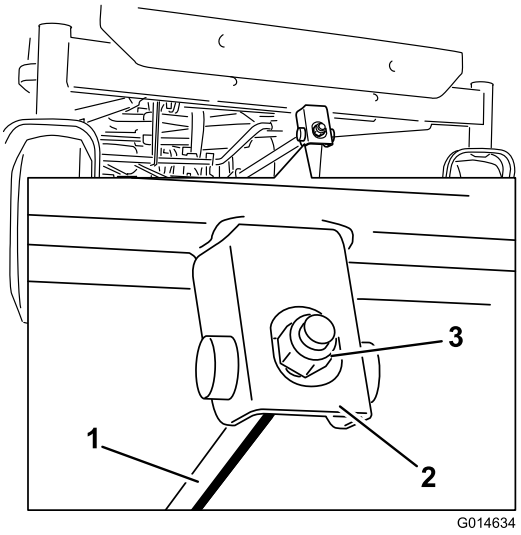

Figure 55

1. Adjusting rod
2. Adjusting block
3. Locknut

7. To raise the front of the mower, tighten the adjustment nut.

   Note: To lower the front of the mower, loosen the adjustment nut.

8. After adjustment, check the front-to-rear slope again.

   Note: Continue adjusting the nut until the front blade tip is 1.6 to 7.9 mm (1/16 to 5/16 inch) lower than the rear blade tip (Figure 53 and Figure 54).

9. When the front-to-rear blade slope is correct check the side-to-side level of the mower again; refer to Side-to-Side Leveling (page 34).

Removing the Mower

1. Park the machine on a level surface and disengage the blade-control switch.
2. Move the motion-control levers outward to the park position, stop the engine, remove the key, and wait for all moving parts to stop before leaving the operating position.
3. Lower the height-of-cut lever to the lowest position.
4. Remove the hairpin-cotter pin from the front support rod, and remove the rod from the deck bracket (Figure 56).

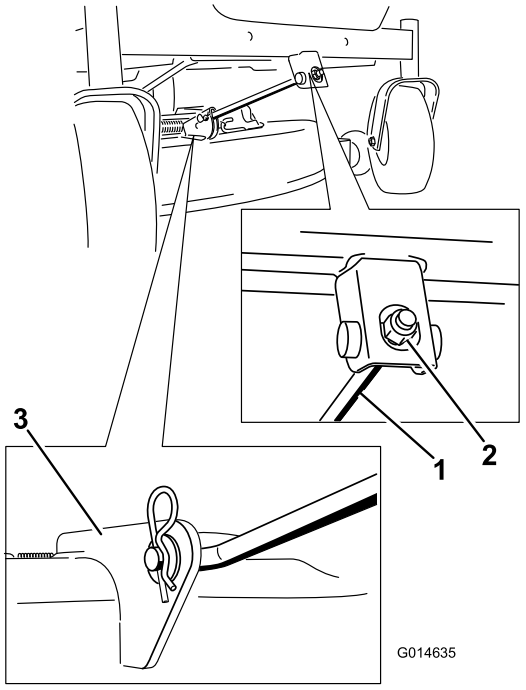

Figure 56

1. Front-support rod
2. Locking nut
3. Deck bracket

5. Carefully lower the front of the mower deck to the ground.
6. Lift the mower deck and hanger brackets clear of the rear lift rod and lower the mower carefully to the ground (Figure 57).

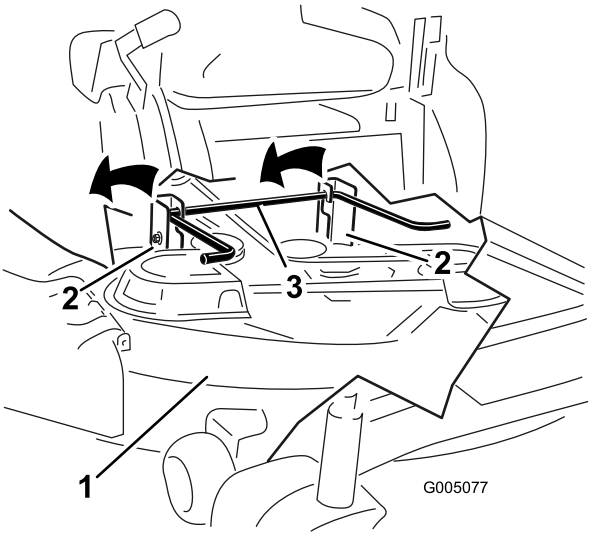

Figure 57

1. Mower deck
2. Hanger bracket
3. Rear lift rod

7. Slide the mower deck rearward to remove the mower belt from the engine pulley.
8. Slide the mower deck out from underneath the machine.

Note: Retain all parts for future installation.

Installing the Mower

1. Park the machine on a level surface and disengage the blade-control switch.
2. Move the motion-control levers outward to the park position, stop the engine, remove the key, and wait for all moving parts to stop before leaving the operating position.
3. Slide the mower under the machine.
4. Lower the height-of-cut lever to the lowest position.
5. Lift the rear of the mower deck and guide the hanger brackets over the rear lift rod (Figure 57).
6. Attach the front support rod to the mower deck with the clevis pin and hairpin-cotter pin (Figure 56).
7. Install the mower belt onto the engine pulley.

Replacing the Grass Deflector

Service Interval: Before each use or daily—Inspect the grass deflector for damage

⚠ WARNING

An uncovered discharge opening could allow the lawn mower to throw objects in the operator's or bystander's direction and result in serious injury. Also, contact with the blade could occur.

Never operate the lawn mower unless you install a mulch plate, discharge deflector, or grass collection system.

Inspect the grass deflector for damage before each use. Replace any damaged parts before use.

1. Disengage the spring from the notch in the deflector bracket and slide the rod out of the welded deck brackets, spring, and discharge deflector (Figure 58).

   Note: Remove the damaged or worn discharge deflector.

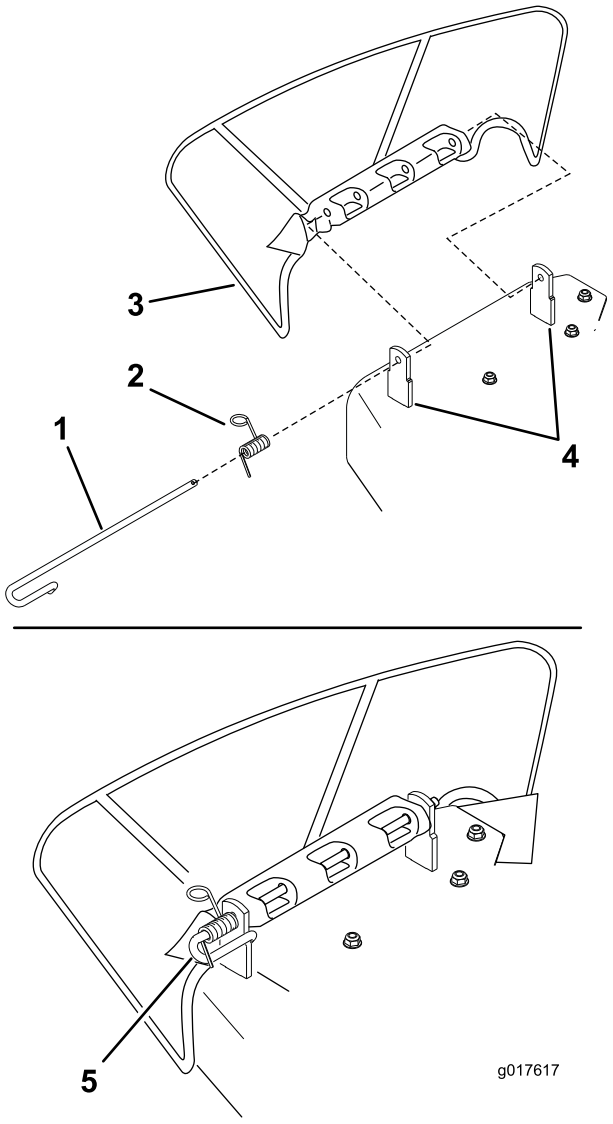

Figure 58

1. Rod
2. Spring
3. Deflector
4. Deck brackets
5. Spring installed over the rod

2. Position the new discharge deflector with the bracket ends between the welded brackets on the deck as shown in Figure 58.
3. Install the spring onto the straight end of the rod.

   Note: Position the spring on the rod as shown in so the shorter spring end is coming from under the rod before the bend and going over the rod as it returns from the bend.
4. Lift the loop end of the spring and place it into the notch on the deflector bracket (Figure 59).

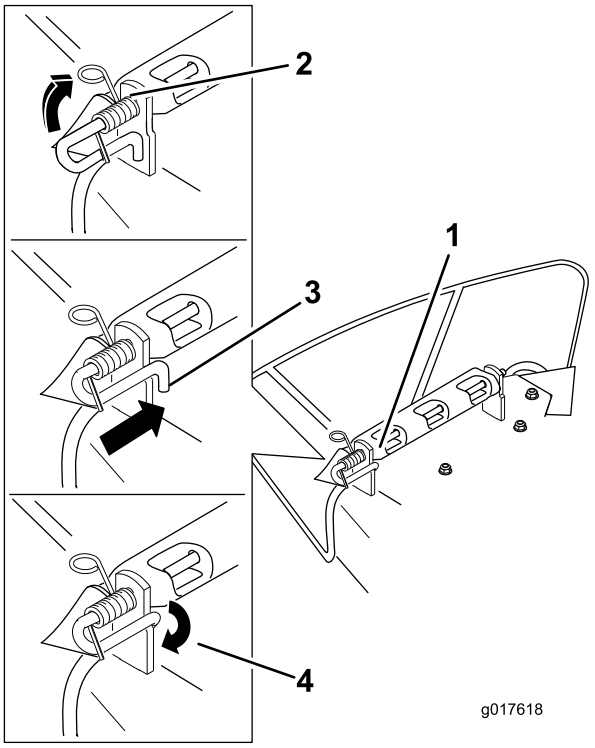

Figure 59

1. Rod and spring assembly installed
2. Loop end of the spring installed into the notch in the deflector bracket
3. Rod, short end, moved behind mower bracket
4. Short end, retained by the mower bracket

5. Secure the rod and spring assembly by twisting it so the short end of the rod can be placed behind the front bracket welded to the deck (Figure 59).

   Important: The grass deflector must be spring loaded in the down position. Lift the deflector up to test that it snaps to the full down position.

Mower Belt Maintenance

Inspecting the Belts

Service Interval: Every 25 hours—Check the belts for wear or cracks.

Check the belts for cracks, frayed edges, burn marks, or any other damage. Replace damaged belts.

Replacing the Mower Belt

Squealing when the belt is rotating, blades slipping when cutting grass, frayed belt edges, burn marks, and cracks are signs of a worn mower belt. Replace the mower belt if any of these conditions are evident.

1. Park the machine on a level surface and disengage the blade-control switch.
2. Move the motion-control levers outward to the park position, stop the engine, remove the key, and wait for all moving parts to stop before leaving the operating position.
3. Set the height-of-cut at the lowest cutting position of 38 mm (1-1/2 inches).
4. Using a spring-removal tool (Toro part no. 92-5771), remove the idler spring from the deck hook to remove tension on the idler pulley, and roll the belt off the pulleys (Figure 60).

⚠ WARNING

The spring is under tension when installed and can cause personal injury.

Be careful when removing the belt.

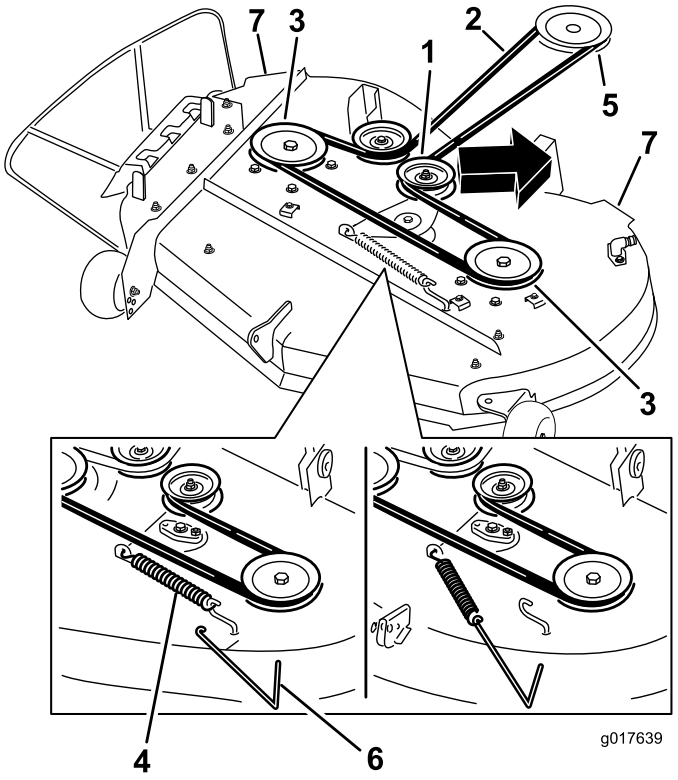

Figure 60

1. Idler pulley
2. Mower belt
3. Outside pulley
4. Spring
5. Engine pulley
6. Spring removal tool
7. Mower deck handles

5. Route the new belt around the engine pulley and mower pulleys (Figure 60).
6. Using a spring-removal tool (Toro part no. 92-5771), install the idler spring over the deck hook, and place tension on the idler pulley and mower belt (Figure 60).

Cleaning

Washing the Underside of the Mower

Service Interval: After each use—Clean the mower housing.

Wash the underside of the mower after each use to prevent grass buildup for improved mulch action and clipping dispersal.

1. Park the machine on a level surface, and disengage the blade-control switch.
2. Move the motion-control levers outward to the park position, stop the engine, remove the key, and wait for all moving parts to stop before leaving the operating position.
3. Attach the hose coupling to the end of the mower washout fitting, and turn the water on high (Figure 61).

   Note: Spread petroleum jelly on the washout fitting O-ring to make the coupling slide on easier and protect the O-ring.

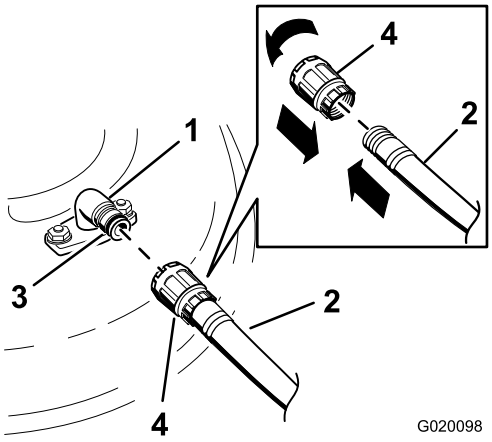

Figure 61

1. Washout fitting
2. Hose
3. O-ring
4. Coupling

4. Lower the mower to the lowest height-of-cut.
5. Sit on the seat and start the engine.
6. Engage the blade-control switch and let the mower run for 1 to 3 minutes.
7. Disengage the blade-control switch, stop the engine, and remove the ignition key.

   Note: Wait for all moving parts to stop.
8. Turn the water off and remove the coupling from the washout fitting.

   Note: If the mower is not clean after one washing, soak it and let it stand for 30 minutes, then repeat the process.
9. Run the machine and mower blades again for one to three minutes to remove excess water.
10. Turn off the mower blades.

⚠ WARNING

A broken or missing washout fitting could expose you and others to thrown objects or blade contact. Contact with blade or thrown debris can cause injury or death.

- **Replace broken or missing washout fitting immediately, before using mower again.**
- **Never put your hands or feet under the mower or through openings in the mower.**

Storage

Cleaning and Storage

1. Disengage the blade control switch, move the motion controls outward to the park position, stop the engine, and remove the key.
2. Remove grass clippings, dirt, and grime from the external parts of the entire machine, especially the engine. Clean dirt and chaff from the outside of the engine cylinder head fins and blower housing.

   Important: You can wash the machine with mild detergent and water. Do not pressure wash the machine. Avoid excessive use of water, especially near the control panel, under the seat, around the engine, hydraulic pumps, and motors.
3. Service the air cleaner; refer to Servicing the Air Cleaner (page 24).
4. Grease and oil the machine; refer to Lubrication (page 23).
5. Change the crankcase oil and filter; refer to Changing the Engine Oil and the Engine-oil Filter (page 25).
6. Check the tire pressure; refer to Checking the Tire Pressure (page 30).
7. Charge the battery; refer to Charging the Battery (page 28).
8. Check the condition of the blades; refer to Servicing the Cutting Blades (page 31).
9. Prepare the machine for storage when non-use occurs over 30 days. Prepare the machine for storage as follows.
10. Add a petroleum based stabilizer/conditioner to the fuel in the tank. Follow the mixing instructions from the stabilizer manufacturer. Do not use an alcohol based stabilizer (ethanol or methanol).

    Note: A fuel stabilizer/conditioner is most effective when mixed with fresh gasoline and used at all times.

    A. Run the engine to distribute the conditioned fuel through the fuel system (5 minutes).

    B. Stop the engine, allow it to cool, and drain the fuel tank.

    C. Start the engine and run it until it stops.

    D. Choke the engine. Start and run the engine until it will not start.

    E. Dispose of fuel properly. Recycle pursuant to local codes.

    Important: Do not store stabilizer/conditioned gasoline over 90 days.
11. Remove the spark plug(s) and check its condition; refer to Servicing the Spark Plug (page 26). With the spark plug(s) removed from the engine, pour 2 tablespoons of engine oil into the spark plug hole. Use the starter to crank the engine and distribute the oil inside the cylinder. Install the spark plug(s). Do not install the wire on the spark plug(s).
12. Clean any dirt and chaff from the top of the mower.
13. Scrape any heavy buildup of grass and dirt from the underside of the mower, then wash the mower with a garden hose.
14. Check the condition of the drive and mower belts.
15. Check and tighten all bolts, nuts, and screws. Repair or replace any part that is worn or damaged.
16. Paint all scratched or bare metal surfaces with paint that is available from your Authorized Service Dealer.
17. Store the machine in a clean, dry garage or storage area. Remove the key from the ignition switch and keep it in a memorable place. Cover the machine to protect it and keep it clean.

Troubleshooting

Problem	Possible Cause	Corrective Action
The engine overheats.	1. The engine load is excessive. 2. The oil level in the crankcase is low. 3. The cooling fins and air passages under the engine blower housing are plugged. 4. The air cleaner is dirty. 5. Dirt, water, or stale fuel is in the fuel system.	1. Reduce the ground speed. 2. Add oil to the crankcase. 3. Remove the obstruction from the cooling fins and air passages. 4. Clean or replace the air-cleaner element. 5. Contact an Authorized Service Dealer.
The starter does not crank.	1. The blade-control switch is engaged. 2. The motion-control levers are not in the park position. 3. The battery is dead. 4. The electrical connections are corroded or loose. 5. A fuse is blown. 6. A relay or switch is damaged.	1. Move the blade-control switch to Disengaged. 2. Move the motion-control levers outward to the park position. 3. Charge the battery. 4. Check the electrical connections for good contact. 5. Replace the fuse. 6. Contact an Authorized Service Dealer.
The engine does not start, starts hard, or fails to keep running.	1. The fuel tank is empty. 2. The choke is not on. 3. The air cleaner is dirty. 4. The spark plug wire(s) is loose or disconnected. 5. The spark plug(s) is pitted, fouled, or the gap is incorrect. 6. There is dirt in fuel filter. 7. Dirt, water, or stale fuel is in fuel system. 8. There is incorrect fuel in the fuel tank. 9. The oil level in the crankcase is low.	1. Fill the fuel tank. 2. Move the choke lever to On. 3. Clean or replace the air-cleaner element. 4. Install the wire(s) on the spark plug. 5. Install a new, correctly gapped spark plug(s). 6. Replace the fuel filter. 7. Contact an Authorized Service Dealer. 8. Drain the tank and replace the fuel with the proper type. 9. Add oil to the crankcase.
The engine loses power.	1. The engine load is excessive. 2. The air cleaner is dirty. 3. The oil level in the crankcase is low. 4. The cooling fins and air passages under the engine blower housing are plugged. 5. The spark plug(s) is pitted, fouled, or the gap is incorrect. 6. The fuel-tank vent is blocked. 7. There is dirt in the fuel filter. 8. Dirt, water, or stale fuel is in the fuel system. 9. There is incorrect fuel in the fuel tank.	1. Reduce the ground speed. 2. Clean the air-cleaner element. 3. Add oil to the crankcase. 4. Remove the obstruction from the cooling fins and air passages. 5. Install a new, correctly gapped spark plug(s). 6. Contact an Authorized Service Dealer. 7. Replace the fuel filter. 8. Contact an Authorized Service Dealer. 9. Drain the tank and replace the fuel with the proper type.
The machine does not drive.	1. The bypass valves are open. 2. The traction belts are worn, loose, or broken. 3. The traction belts are off of the pulleys. 4. The transmission has failed.	1. Close the tow valves. 2. Contact an Authorized Service Dealer. 3. Contact an Authorized Service Dealer. 4. Contact an Authorized Service Dealer.

Problem	Possible Cause	Corrective Action
There is an abnormal vibration.	1. The engine-mounting bolts are loose. 2. The engine pulley, idler pulley, or blade pulley is loose. 3. The engine pulley is damaged. 4. The cutting blade(s) is/are bent or unbalanced. 5. A blade mounting bolt is loose. 6. A blade spindle is bent.	1. Tighten the engine-mounting bolts. 2. Tighten the appropriate pulley. 3. Contact an Authorized Service Dealer. 4. Install a new cutting blade(s). 5. Tighten the blade-mounting bolt. 6. Contact an Authorized Service Dealer.
The cutting height is uneven.	1. The blade(s) is not sharp. 2. A cutting blade(s) is/are bent. 3. The mower is not level. 4. An anti-scalp wheel is not set correctly. 5. The underside of the mower is dirty. 6. The tire pressure is incorrect. 7. A blade spindle is bent.	1. Sharpen the blade(s). 2. Install a new cutting blade(s). 3. Level the mower from side-to-side and front-to-rear. 4. Adjust the anti-scalp wheel height. 5. Clean the underside of the mower. 6. Adjust the tire pressure. 7. Contact an Authorized Service Dealer.
The blades do not rotate.	1. The drive belt is worn, loose, or broken. 2. The drive belt is off of the pulley. 3. The Power Take-Off (PTO) switch or PTO clutch is faulty. 4. The mower belt is worn, loose, or broken.	1. Install a new drive belt. 2. Install the drive belt and check the adjusting shafts and belt guides for the correct position. 3. Contact an Authorized Service Dealer. 4. Install a new mower belt.

Schematics

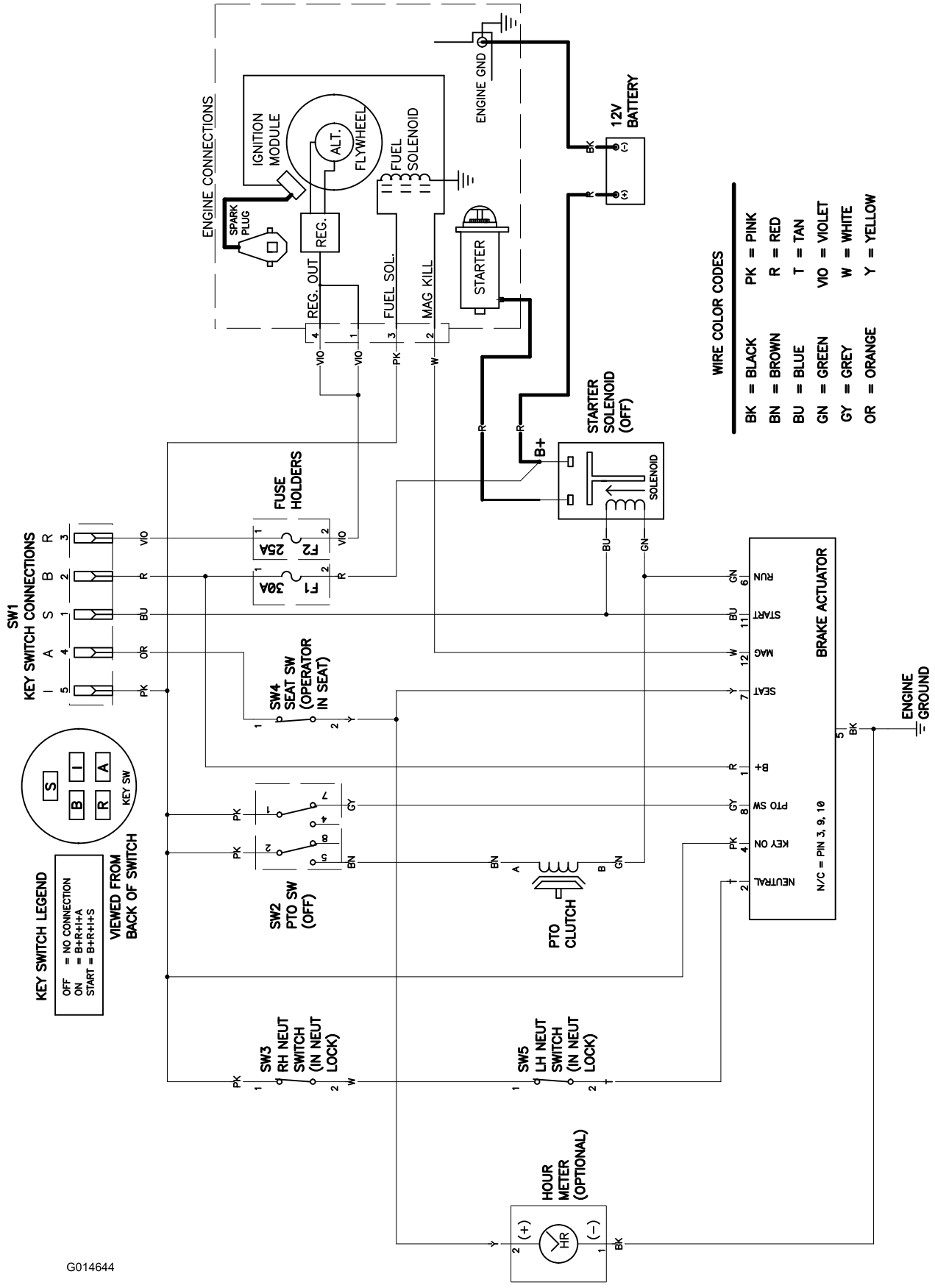

Electrical Diagram (Rev. A)

Notes:

Notes:

Notes:

TimeCutter
and
TITAN
Mowers

The Toro Total Coverage Warranty

Limited Warranty (see warranty periods below)

Conditions and Products Covered

The Toro Company and its affiliate, Toro Warranty Company, pursuant to an agreement between them, jointly promise to the original purchaser to repair the Toro Products listed below if defective in materials or workmanship.

The following time periods apply from the date of purchase by the original owner:

Products	Warranty Period
TimeCutter and MX Mowers	Residential use[2] – 3 years
• Engines[1] — Residential use	Kawasaki – 3 years Kohler – 3 years Toro – 3 years
TimeCutter and MX Mowers	Commercial use 30 days
• Engines[1] — Commercial use	Kawasaki – 3 years Kohler – 90 days Toro – 90 days
TITAN Mowers – Residential or Commercial use	3 years or 300 hours[3]
• Engines[1] — Residential or Commercial use	Kawasaki – 3 years
• Frame	Lifetime (original owner only)[4]
TITAN MX5400 and MX600 Mowers – Residential or Commercial use	4 years or 400 hours[3]
• Engines[1] — Residential or Commercial use	Kawasaki – 3 years
• Frame	Lifetime (original owner only)[4]
All Mowers	
• Attachments	1 year
• Battery	90 days Parts and Labor 1 year Parts only
• Belts and Tires	90 days

[1]Some engines used on Toro Products are warranted by the engine manufacturer.

[2]Residential use means use of the product on the same lot as your home. Use at more than one location is considered commercial use and the commercial use warranty would apply.

[3]Whichever occurs first.

[4]Lifetime Frame Warranty - If the main frame, consisting of the parts welded together to form the tractor structure that other components such as the engine are secured to, cracks or breaks in normal use, it will be repaired or replaced, at Toro's option, under warranty at no cost for parts and labor. Frame failure due to misuse or abuse and failure or repair required due to rust or corrosion are not covered.

Warranty may be denied if the hour meter is disconnected, altered, or shows signs of being tampered with.

Owner Responsibilities

You must maintain your Toro Product by following the maintenance procedures described in the *Operator's Manual*. Such routine maintenance, whether performed by a dealer or by you, is at your expense.

Instructions for Obtaining Warranty Service

If you think that your Toro Product contains a defect in materials or workmanship, follow this procedure:

1. Contact any Authorized Toro Service Dealer to arrange service at their dealership. To locate a dealer convenient to you, refer to the *Yellow Pages* of your telephone directory (look under “Lawn Mowers”) or access our web site at www.Toro.com. You may also call the numbers listed in item #3 to use the 24-hour Toro Dealer locator system.
2. Bring the product and your proof of purchase (sales receipt) to the Service Dealer. The dealer will diagnose the problem and determine if it is covered under warranty.
3. If for any reason you are dissatisfied with the Service Dealer’s analysis or with the assistance provided, contact us at:

   Customer Care Department, RLC Division
   Toro Warranty Company
   8111 Lyndale Avenue South
   Bloomington, MN 55420-1196
   Toll free at 866-216-6029 (U.S. customers)
   Toll free at 866-216-6030 (Canadian customers)

Items and Conditions Not Covered

There is no other express warranty except for special emission system coverage and engine warranty coverage on some products. This express warranty does not cover the following:

- Cost of regular maintenance service or parts, such as filters, fuel, lubricants, oil changes, spark plugs, air filters blade sharpening or worn blades, cable/linkage adjustments, or brake and clutch adjustments
- Components failing due to normal wear
- Any product or part which has been altered or misused or neglected and requires replacement or repair due to accidents or lack of proper maintenance
- Pickup and delivery charges
- Repairs or attempted repairs by anyone other than an Authorized Toro Service Dealer
- Repairs necessary due to failure to follow recommended fuel procedure (consult *Operator's Manual* for more details)
  - Removing contaminants from the fuel system is not covered
  - Use of old fuel (more than one month old) or fuel which contains more than 10% ethanol or more that 15% MTBE
  - Failure to drain the fuel system prior to any period of non-use over one month

General Conditions

All repairs covered by these warranties must be performed by an Authorized Toro Service Dealer using Toro approved replacement parts.

Neither The Toro Company nor Toro Warranty Company is liable for indirect, incidental or consequential damages in connection with the use of the Toro Products covered by this warranty, including any cost or expense of providing substitute equipment or service during reasonable periods of malfunction or non-use pending completion of repairs under this warranty.

All implied warranties of merchantability (that the product is fit for ordinary use) and fitness for use (that the product is fit for a particular purpose) are limited to the duration of the express warranty.

Some states do not allow exclusions of incidental or consequential damages, or limitations on how long an implied warranty lasts, so the above exclusions and limitations may not apply to you.

This warranty gives you specific legal rights, and you may also have other rights which vary from state to state.

Countries Other than the United States or Canada

Customers who have purchased Toro products outside the United States or Canada should contact their Toro Distributor (Dealer) to obtain guarantee policies for your country, province, or state. If for any reason you are dissatisfied with your Distributor's service or have difficulty obtaining guarantee information, contact the Toro importer. If all other remedies fail, you may contact us at Toro Warranty Company.

Australian Consumer Law: Australian customers will find details relating to the Australian Consumer Law either inside the box or at your local Toro Dealer.