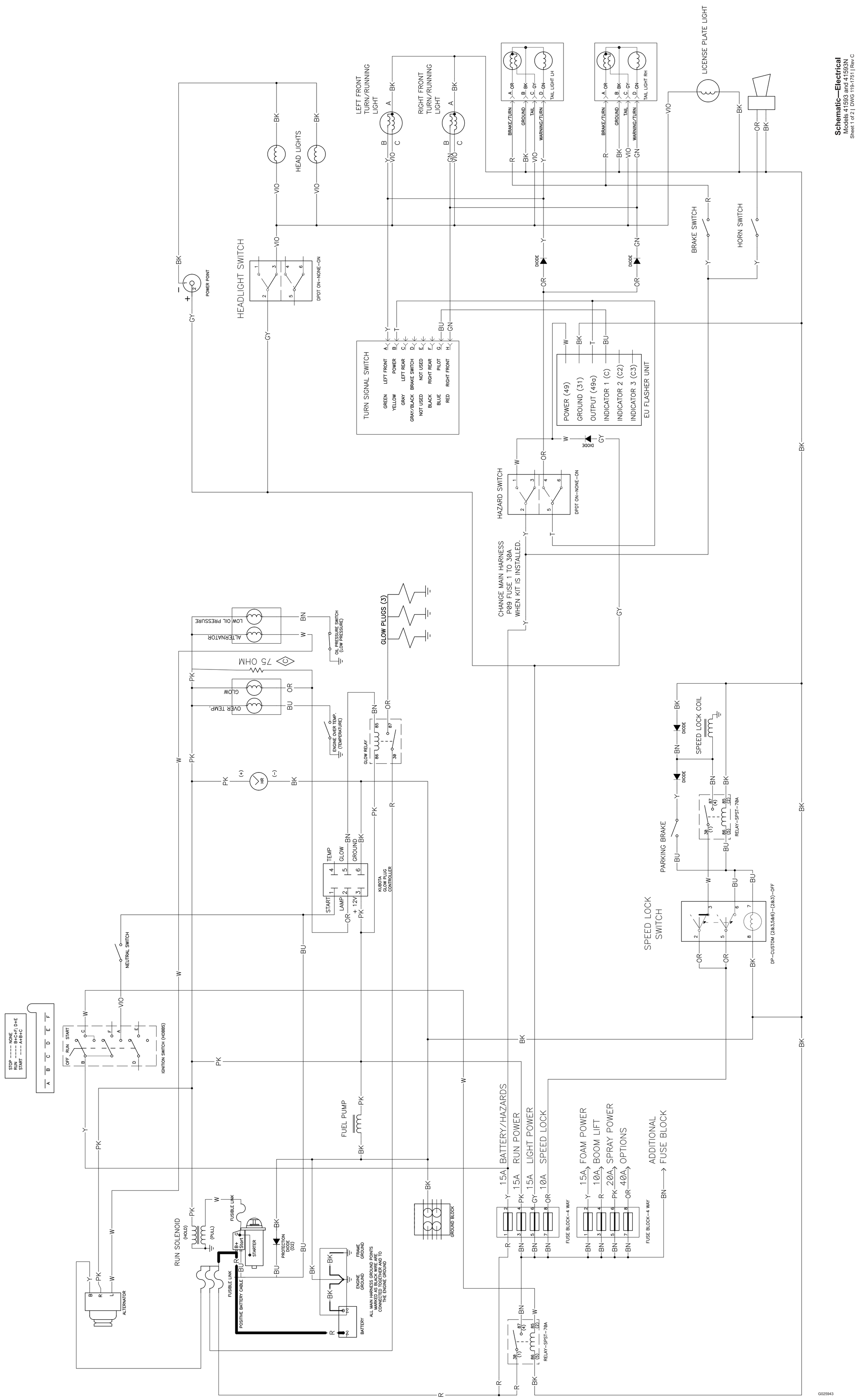
Schematic—Electrical
Models 41593 and 41593N
Sheet 1 of 2 | DWG 119-1751 | Rev C
LICENSE PLATE LIGHT
HEAD LIGHTS
LEFT FRONT TURN/RUNNING LIGHT
RIGHT FRONT TURN/RUNNING LIGHT
TAIL LIGHT LH
TAIL LIGHT RH
BRAKE/TURN
GROUND
TAIL
WARNING/TURN
BRAKE SWITCH
HORN SWITCH
POWER POINT
HEADLIGHT SWITCH
DPDT ON-NONE-ON
DIODE
TURN SIGNAL SWITCH
GREEN LEFT FRONT
YELLOW POWER
GRAY LEFT REAR
GRAY/BLACK BRAKE SWITCH
NOT USED NOT USED
BLACK RIGHT REAR
BLUE PILOT
RED RIGHT FRONT
EU FLASHER UNIT
POWER (49)
GROUND (31)
OUTPUT (49a)
INDICATOR 1 (C)
INDICATOR 2 (C2)
INDICATOR 3 (C3)
HAZARD SWITCH
CHANGE MAIN HARNESS P09 FUSE 1 TO 30A WHEN KIT IS INSTALLED.
GLOW PLUGS (3)
LOW OIL PRESSURE
ALTERNATOR
OIL PRESSURE SWITCH (LOW PRESSURE)
75 OHM
GLOW
OVER TEMP.
ENGINE OVER TEMP. (TEMPERATURE)
GLOW RELAY
KUBOTA GLOW PLUG CONTROLLER
TEMP
GLOW
GROUND
START
LAMP
+ 12V
NEUTRAL SWITCH
IGNITION SWITCH (HOBBS)
STOP ---- NONE
RUN ---- B+C+F; D+E
START ---- A+B+C
OFF RUN START
FUEL PUMP
PARKING BRAKE
SPEED LOCK COIL
DIODE
RELAY-SPST-70A
SPEED LOCK SWITCH
DP-CUSTOM (2&3,5&6)-(2&3)-OFF
GROUND BLOCK
BATTERY/HAZARDS 15A
RUN POWER 15A
LIGHT POWER 15A
SPEED LOCK 10A
FUSE BLOCK-4 WAY
FOAM POWER 15A
BOOM LIFT 10A
SPRAY POWER 20A
OPTIONS 40A
ADDITIONAL FUSE BLOCK
RUN SOLENOID
(HOLD)
(PULL)
FUSIBLE LINK
STARTER
PROTECTION DIODE (D2)
ALTERNATOR
POSITIVE BATTERY CABLE
FRAME GROUND
ENGINE GROUND
BATTERY
ALL MAIN HARNESS GROUND POINTS MARKED AS BLACK WIRE ARE CONNECTED TOGETHER AND TO THE ENGINE GROUND
G025943

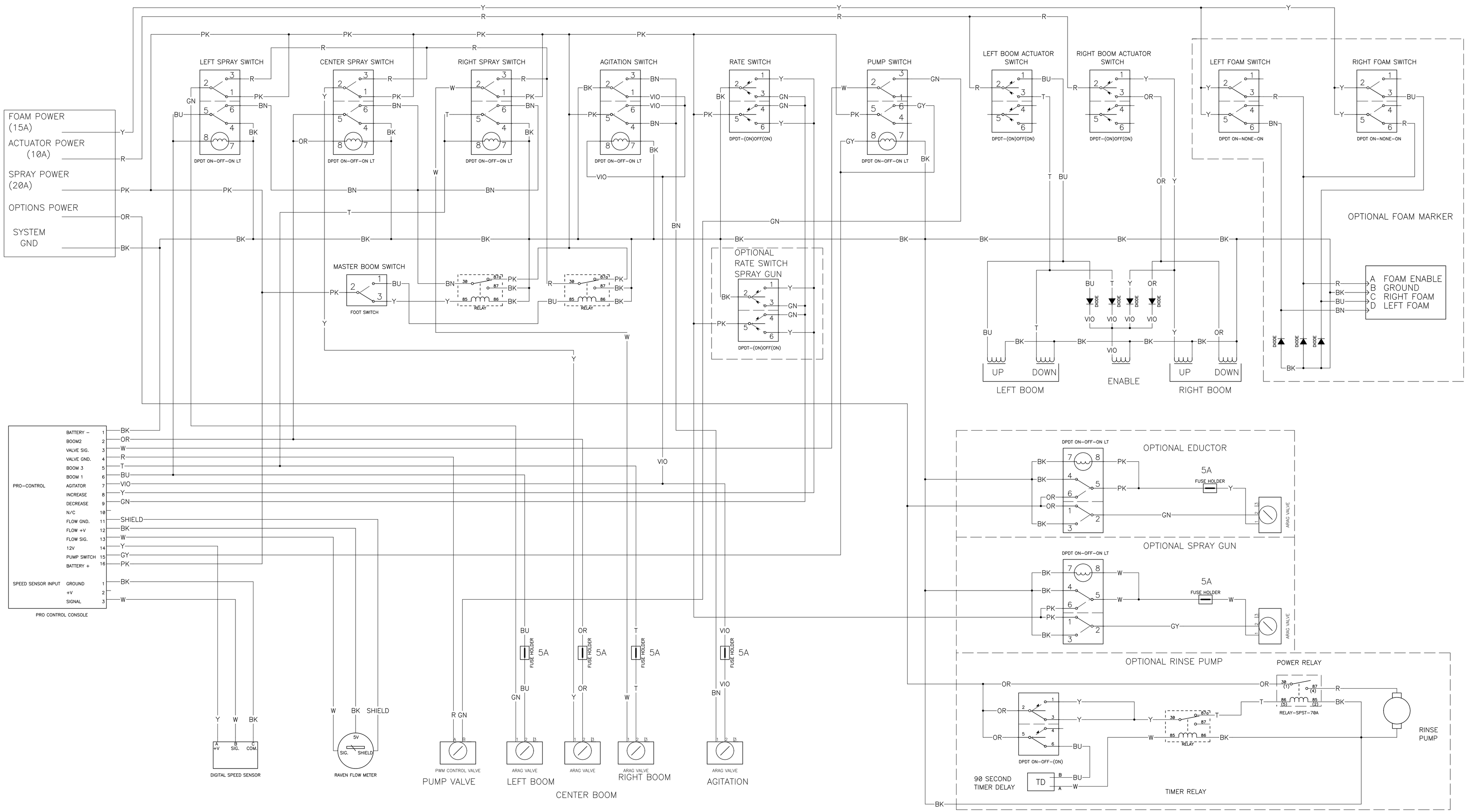

Schematic—Electrical
Models 41593 and 41593N
Sheet 2 of 2 | DWG 119-1751 | Rev C

©2014—The Toro® Company, 8111 Lyndale Avenue South, Bloomington, MN 55420