FORM NO. 3320-493 Rev. A

TORO

MODEL NO. 20586C-8900001
- 9900001 & UP

OPERATOR'S MANUAL

18" (0.46 m) HP 4-in-1 REAR BAGGER

FINGERTIP START

ENGLISH

⚠ SAFETY INSTRUCTIONS

BEFORE OPERATING

1. Read this manual carefully before operating the mower. Become familiar with the controls and proper use of the mower. Never allow children to operate the mower or adults to operate it without proper instructions.
2. Keep everyone, especially children and pets, away from the area of operation. Thoroughly inspect area where mower will be used and remove sticks, stones, wire and debris.
3. Wear long pants and substantial shoes. Do not operate mower while wearing open sandals or when barefoot.
4. Check fuel level before starting engine. Do not fill fuel tank indoors, when the engine is running, or until engine cools for several minutes after running. Wipe up spilled gasoline before starting engine.
5. Keep all guards, shields and safety devices in place. Repair or replace defective or damaged parts.

WHILE OPERATING

6. Do not run engine indoors.
7. Always maintain secure footing. Keep a firm grip on the handle and walk; never run. Never operate mower in wet grass. Mow only in daylight or good artificial light.
8. Mow across the face of slopes; never up and down. Use extreme caution when changing direction on slopes. Do not mow excessively steep slopes.
9. Keep face, hands and feet away from the mower housing and cutter blade when the engine is running. Stay behind the handle until the engine stops and keep clear of discharge opening at all times.
10. When mulching, keep grass bag in place and assure chute door is closed. When bagging grass, stop engine and assure chute door is closed before the bag is removed and emptied.
11. Shut engine off and wait for all moving parts to stop before unclogging chute.
12. Since the blade rotates for a few seconds after the throttle control is moved to OFF, stay behind the handle until all moving parts stop.
13. After striking a foreign object or if mower vibrates abnormally, stop engine and remove wire from spark plug. Check mower for damage and make all repairs before using mower again.
14. Stop the engine before adjusting the height-of-cut.
15. Stop the engine before crossing a gravel driveway, road or sidewalk.
16. Stop engine before leaving the operator's position — behind the handle. Disconnect high tension wire from spark plug if mower will be unattended.
17. Do not touch muffler or engine while it is running or shortly after it is stopped because muffler or engine will be hot enough to cause a burn.

MAINTENANCE

18. Perform only those maintenance instructions described in this manual. If major repairs are ever needed or if assistance is desired, contact an Authorized TORO Service Dealer.
19. Before mower is cleaned, inspected, serviced or adjusted, stop engine and disconnect high tension wire from spark plug. Keep wire away from plug to prevent accidental starting.
20. To assure the mower is in safe operating condition, frequently check and keep all nuts, bolts and screws tight. Assure blade bolt is tightened to proper specifications.
21. To reduce fire hazard, keep engine free of excessive grease, grass, leaves and accumulations of dirt.
22. Check grass catcher bag frequently for wear or deterioration. Replace with a new bag for your protection.
23. Allow engine to cool before storing mower in any enclosure. Do not store mower near any open flame or where gasoline fumes may be ignited by a spark.

⚠ SAFETY INSTRUCTIONS

24. Do not overspeed the engine by changing governor settings.

25. At the time of manufacture the mower conformed to the safety standards in effect for rotary mowers. To assure optimum performance and continued safety certification of the mower, use genuine TORO replacement parts and accessories. Replacement parts and accessories made by other manufacturers may result in non-conformance with the safety standards, and that could be dangerous.

SYMBOL GLOSSARY



Safety alert



Keep hands and feet away from rotating blade



Place foot here when starting



Keep hands away



Keep all guards in place



Engine start



Keep bystanders from area being mowed



Never open chute door on mower when engine is running, unless grass bag or side discharge attachment is installed

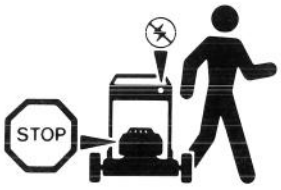

Stop engine before leaving operator position



Slow



Fast



Read and understand operator's manual



Engine speed (Throttle)

©The Toro Company — 1987, Rev. 1988

TABLE OF CONTENTS

	Page
Set-Up Instructions	3
Before Operating	4
Operating Instructions	5-7
Maintenance	7-9
Servicing Air Cleaner	7
Replacing Spark Plug	7
Draining Fuel	8
Cleaning Mower Housing	8
Changing Crankcase Oil	8
Inspecting/Removing/Sharpening Blade	8
Lubrication	9
Adjusting Throttle Control	9
Preparing Mower For Storage	9
Maintenance Record	10-11
Toro Service Support	12
Product Identification	12

SET-UP INSTRUCTIONS

INSTALL HANDLE AND BAG

1. LOWER HANDLE (Fig. 1) — Push ends of lower handle together and install on pivot pins. Insert bolts through hole in handle latches and install handle knobs. Tighten securely. Assure control cable is to the rear and inside of handle.

Note: Handle can be set in any of three positions, depending on operator height.

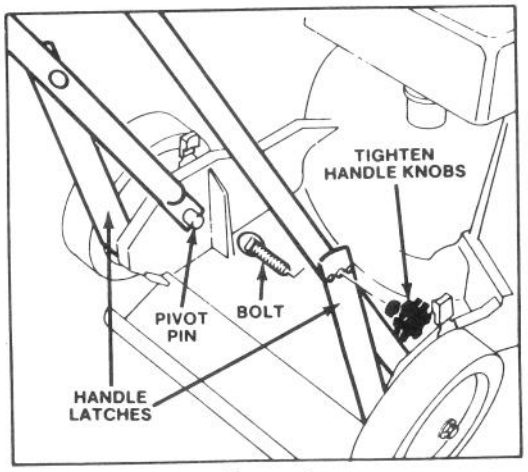

Figure 1

2. UPPER HANDLE (Fig. 2) — Secure upper and lower handles in place with handle bolts and nuts. Secure control cables in position with cable clip.

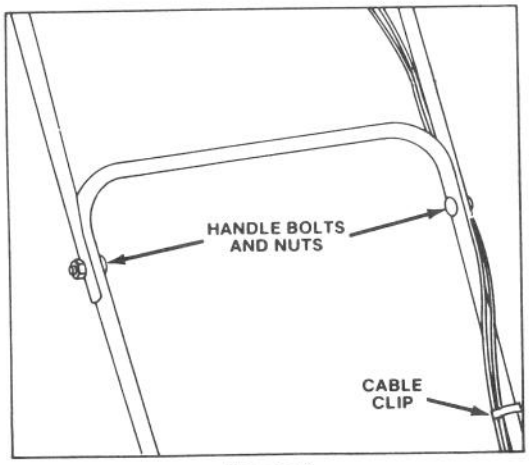

Figure 2

3. Install grass bag: refer to Using Grass Bag, page 6, steps 1-4.

BEFORE OPERATING

⚠ DANGER: Gasoline is extremely flammable and explosive under certain conditions. Do not smoke when handling fuel and keep fuel far away from open flames and sparks. Never buy more than a 30 day supply of gasoline. Store gasoline in an approved container and keep it out of the reach of children.

Refuel outdoors, only when engine is cold. Fill tank to within 1/4" to 1/2" (6 to 13 mm) from its top. This space is for expansion of fuel. Use funnel or spout to prevent spilling. Wipe up any spilled gas.

FILL CRANKCASE WITH OIL

The engine does not have oil in the crankcase when it is shipped from the factory. If engine is started before oil is added to the crankcase, engine damage could result. Therefore, before engine is started for the first time:

1. Position mower on level surface.
2. Clean area around the oil dipstick to prevent foreign matter from entering the filler hole when dipstick is removed.
3. Remove dipstick by rotating cap counter-clockwise 1/4 turn (Fig. 3).

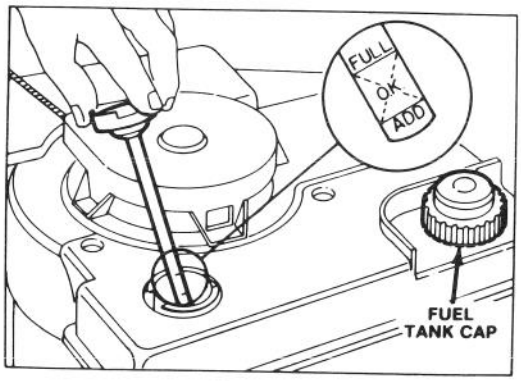

Figure 3

4. Slowly pour approximately 21 ounces (0.621 l) of oil into the filler neck. The engine uses any high quality detergent oil having the American Petroleum Institute — API — "service classification" MS, SC, SD or SE. The recommended oil to use is: SAE 30 or 10W-30.
5. Wipe end of dipstick with clean rag and insert it into filler neck. Rotate cap clockwise 1/4 turn. Then remove the dipstick and check level of oil by reading the dipstick (Fig. 3). If level of oil is low, add only enough oil to raise level to FULL mark on dipstick. DO NOT ADD OIL SO LEVEL RISES ABOVE FULL MARK BECAUSE ENGINE COULD BE DAMAGED WHEN IT IS STARTED.
6. Insert dipstick into filler neck and rotate cap clockwise 1/4 turn to lock.

Note: Check level of oil after every 5 operating hours or each time the mower is used. Initially, change oil after the first 2 hours of operation; thereafter, when conditions are normal, change oil after every 25 hours of operation. However, change oil more frequently when mower is operated in dusty or dirty conditions.

FILL FUEL TANK WITH GASOLINE

1. Clean area around fuel tank cap and remove cap from tank (Fig. 3).
2. Fill fuel tank to within 1/2 inch (12.7 mm) from top of the tank with unleaded gasoline. Install fuel tank cap securely.

Note: If unleaded gasoline is not available, leaded-regular gasoline can be used.

3. Wipe up spilled gasoline.

IMPORTANT: Unleaded gasoline is recommended. Do not mix any oil with the gasoline, and never use premium gasoline, gasoline additives or white gas because engine damage could result.

OPERATING INSTRUCTIONS

4-in-1 MOWING VERSATILITY

REAR BAG — Bag lush grass in the spring to help keep your lawn free of thatch forming clippings.

MULCH — In summer, when grass grows slower and is drier, mulch by closing chute door (Fig. 4). For convenience and protection, keep grass bag on mower.

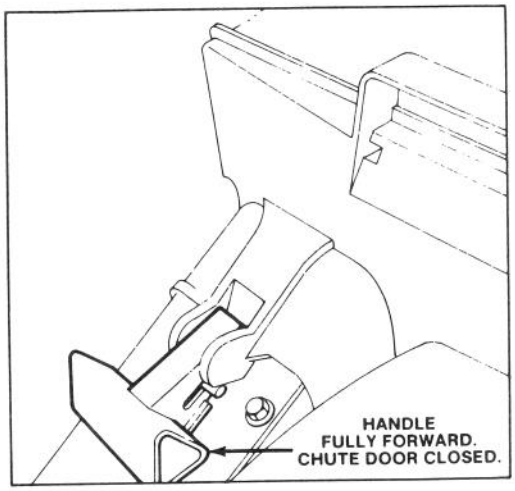

Figure 4

SIDE DISCHARGE — Disperse clippings with optional, rear-mounted side discharge chute which installs in seconds (Fig. 5).

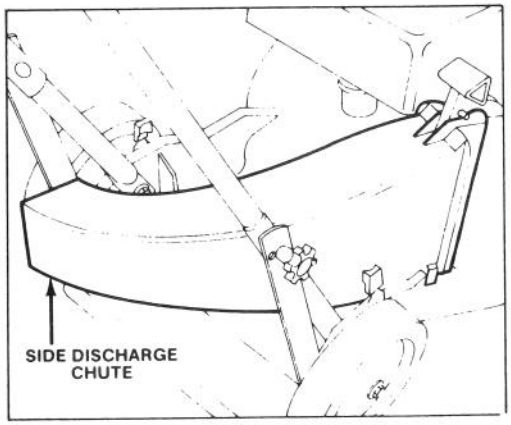

Figure 5

SHRED LEAVES — In fall, optional leaf shredder (Fig. 6) reduces leaves to a fraction of their original size while you bag. Minimizes emptying stops and number of trash bags used for disposal.

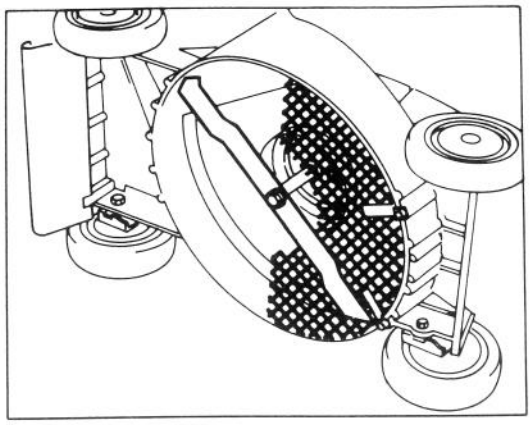

Figure 6

ADJUSTING HEIGHT-OF-CUT

Five letters cast into the housing represent each graduated increment (Fig. 7).

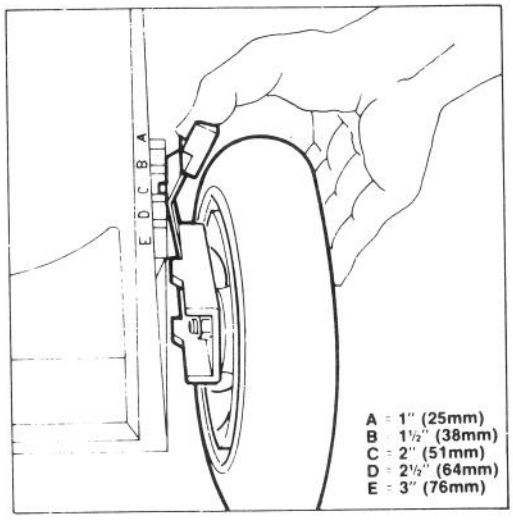

Figure 7

1. Stop the engine.
2. For easier adjustment, lift housing up so wheel is off ground. Squeeze adjusting lever toward wheel and move them to desired setting (Fig. 7). Assure pin on adjusting lever engages notch in housing. Adjust all wheels to the same setting.

OPERATING INSTRUCTIONS

STARTING AND STOPPING

1. CONTROLS — Throttle, control bar and fingertip starter are on upper handle (Fig. 8).

2. Push wire onto spark plug.

3. STARTING — Move throttle to FAST and hold control bar against handle. Pull fingertip starter and regulate throttle as desired when engine starts (Fig. 8). If engine does not start after 2 or 3 pulls, wait 10 seconds for carburetor prime well to refill with gasoline.

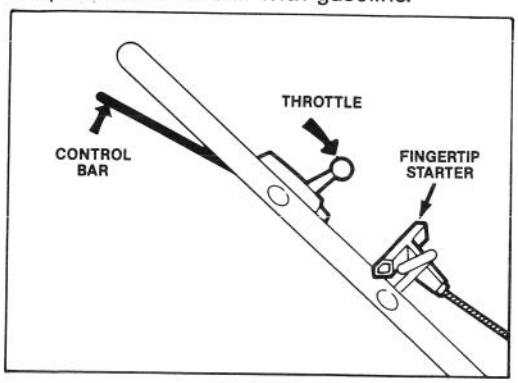

Figure 8

Before starting engine when temperature is below 50°F (10°C), push cold start primer 5 times (Fig. 11), pausing 2 seconds between each push.

4. STOPPING — To stop engine, release control bar. Pull wire off spark plug if mower is unattended or not used.

USING GRASS BAG

Keep bag installed when bagging or mulching.

1. Stop engine and wait for all parts to stop.

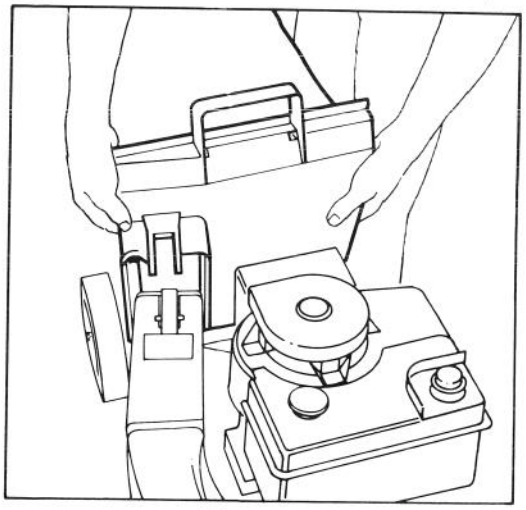

Figure 9

⚠ CAUTION

Except when side discharge attachment is used, never open chute door on mower when engine is running unless grass bag is properly installed, because grass clippings and other debris discharges with enough force to cause injury.

The grass bag material will catch and contain the majority of foreign objects, such as small stones and other similar debris. The bag material, however, is subject to normal wear and deterioration. So check the bag frequently, and if it is defective, install a new genuine TORO replacement bag that has this or similar warning.

2. Assure chute door handle is fully forward and pin is engaged in catch.

3. INSTALLING BAG (Fig. 9) — Hold front of bag frame and bag door together. Then place opening in bag door against flanges on rear chute and slide bag door down.

4. Pull chute door handle backward until pin locks bag in place (Fig. 10). Chute door in mower housing is now open.

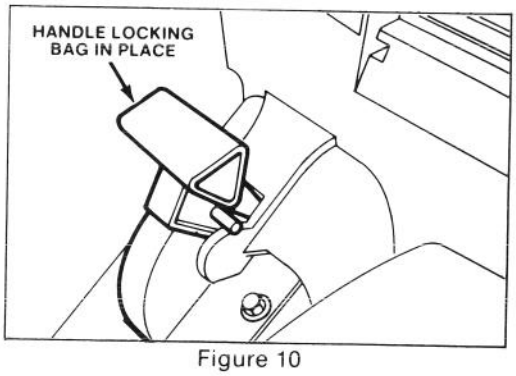

Figure 10

⚠ CAUTION: If chute door cannot be closed because grass clippings clog discharge area, gently move chute door handle back and forth until door can be closed completely. Do not force chute door closed because door or handle may be damaged. If door still cannot be closed, stop engine, disconnect spark plug wire and remove obstruction.

OPERATING INSTRUCTIONS

5. EMPTYING BAG — Stop engine and wait for all parts to stop. Move chute door handle forward to engage the locking pin with catch (Fig. 4). Grasp handle at front and rear of bag and lift bag off mower. Gradually tip bag forward to empty clippings.

6. To reinstall bag, repeat steps 3 and 4.

OPERATING TIPS

1. CUTTING AND BAGGING — Best results are achieved when engine is running at maximum speed and only about 1/3 of the grass blade is cut. If long grass must be cut, use highest height-of-cut setting for first mowing. Then recut the grass at a more normal setting. If too long of grass is cut, mower may plug and cause engine to stall.

2. SHARP BLADE — Begin each cutting season with a sharp blade. Periodically file down nicks.

MAINTENANCE

CAUTION

Pull wire off spark plug before performing adjustments or maintenance.

SERVICING AIR CLEANER

Normally, clean air cleaner after every 25 operating hours. More frequent cleaning is required when mower is operated in dusty or dirty conditions.

1. Stop engine and pull wire off spark plug (Fig. 11).

2. Remove air filter cover and clean (Fig. 11).

3. Inspect air cleaner element (Fig. 11). If necessary remove and clean.

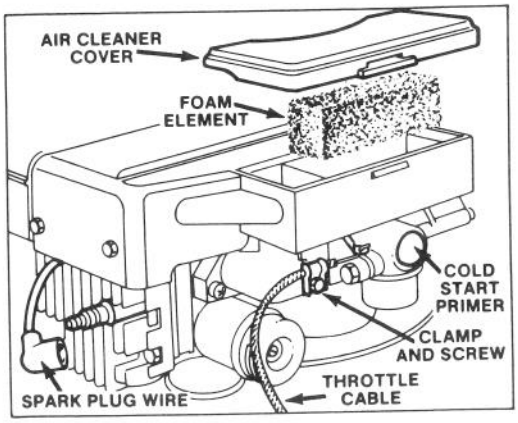

Figure 11

A. WASH foam element in a solution of liquid soap and warm water. Squeeze to remove dirt. Do not twist because foam may tear.

B. DRY by wrapping in a clean rag. Squeeze rag and foam element to dry.

C. SATURATE element with 5 teaspoons (25 ml) of SAE 30 engine oil. Squeeze element to remove excess oil and to distribute oil thoroughly. A damp element is desirable.

4. Install foam element and air cleaner cover.

IMPORTANT: Do not operate engine without air cleaner element because extreme engine wear and damage will likely result.

REPLACING SPARK PLUG

Use a Champion RJ-17LM spark plug or equivalent. Correct air gap is 0.030" (0.76 mm). Remove plug after every 25 operating hours and check its condition.

1. Stop engine and pull wire off spark plug (Fig. 11).

2. Clean around spark plug and remove plug from cylinder head (Fig. 11).

IMPORTANT: Replace a cracked, fouled or dirty spark plug. Do not sand blast, scrape or clean electrodes because engine damage could result from grit entering cylinder.

3. Set air gap at 0.030" (0.76 mm) (Fig. 12). Install correctly gapped spark plug and gasket seal. Tighten plug firmly to 15 ft-lb (20.4 N·m).

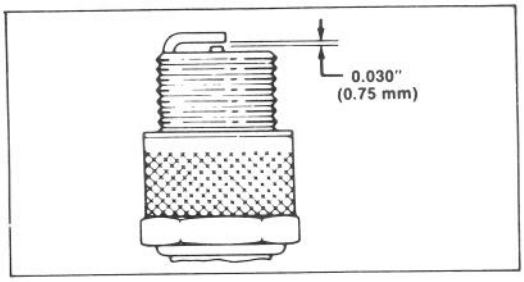

Figure 12

MAINTENANCE

CLEANING MOWER HOUSING

To assure optimum performance, keep underside of mower housing and grass deflector clean.

1. Drain fuel tank: refer to Draining Fuel, page 8.
2. Tip mower on its left side (Fig. 15).
3. Remove dirt and grass clippings that stick to housing by spraying it with a garden hose. Scrape out remaining debris with hardwood scraper. Avoid burrs and sharp edges.

DRAINING FUEL

1. Stop engine. Pull wire off spark plug.
2. Squeeze ends of clip holding fuel line on fuel tank fitting (Fig. 13). Slide clip down fuel line.

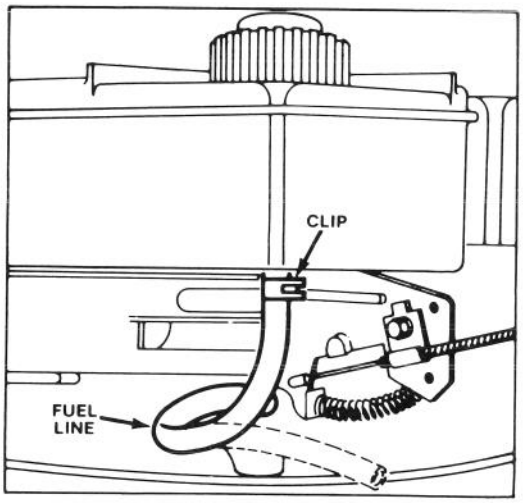

Figure 13

3. Remove fuel line and allow fuel to drain.
4. Install fuel line.

CHANGING CRANKCASE OIL

Change oil after the first 2 operating hours and after every 25 hours thereafter. Since warm oil drains better and carries more contaminates than cold oil, run engine for a minute or so before draining oil.

1. Stop engine and pull wire off spark plug.
2. Remove grass bag. Drain gasoline from fuel tank; refer to Draining Gasoline, page 8.
3. Remove dipstick. Tip mower forward and empty all oil into drain pan (Fig. 14). Tip mower down and up a few times to ensure oil drains completely.

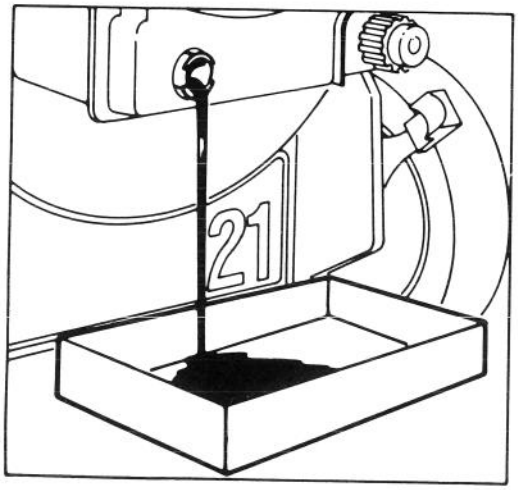

Figure 14

4. After draining, fill engine with fresh oil; refer to Fill Crankcase With Oil, page 4.

INSPECTING/REMOVING/SHARPENING BLADE

1. Stop engine and pull wire off spark plug.
2. Drain fuel from fuel tank: refer to Draining Fuel, page 8.
3. Tip mower on its left side (Fig. 15). Avoid rotating blade. Starting problems may result.

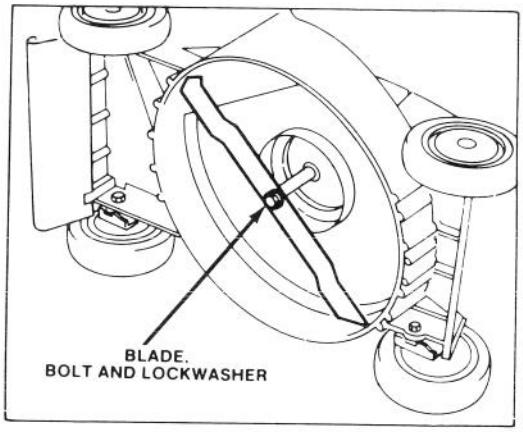

Figure 15

4. INSPECTING BLADE — Carefully examine blade for sharpness and wear, especially where flat and curved parts meet (Fig. 16A). Since sand and abrasive material can wear away the metal that connects the flat and curved parts of the blade, check blade before using the mower. If a slot or wear is noticed (Fig. 16B & C), replace blade. Refer to step 5.

MAINTENANCE

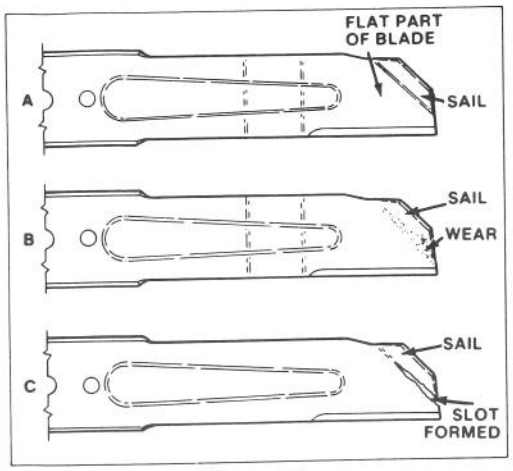

Figure 16

CAUTION

If blade is allowed to wear, a slot may form near the sail. Eventually a piece of blade may break off resulting in serious injury to yourself or a bystander.

5. REMOVING BLADE — Grasp end of blade using a rag or thickly padded glove. Remove blade bolt, lock washer and blade (Fig. 15).

Note: For optimum performance, install new blade before cutting season begins. During the year file down small nicks to maintain the cutting edge.

6. SHARPENING BLADE — Using a file, sharpen top side of blade and maintain original cutting angle (Fig. 17). The blade will remain balanced if same amount of material is removed from both cutting edges.

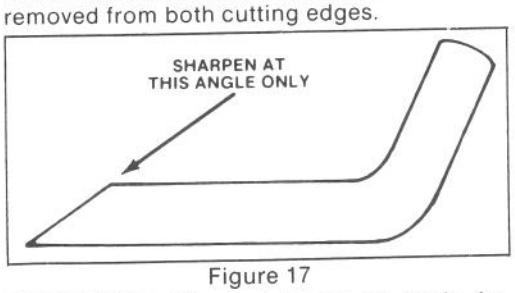

Figure 17

IMPORTANT: Check balance of blade by putting it on a blade balancer. An inexpensive balancer can be purchased at a hardware store. A balanced blade will stay in horizontal position and an unbalanced blade will settle to the heavy side. If blade is not balanced, file more metal off cutting edge on heavy end of blade.

7. Install sharp, balanced blade with blade bolt and lock washer. Sail part of blade must point toward top of mower housing to assure correct installation. Tighten the blade bolt to 50 ft-lb (68 N·m).

LUBRICATION

After every 25 operating hours or when season ends, front and rear wheels must be lubricated.

1. Apply 2 or 3 drops of light oil on inside of front and rear wheel bolts. Spin wheels to distribute oil into bushings. Wipe up excess oil.

ADJUSTING THROTTLE CONTROL

An adjustment of the throttle control may be required if the engine does not start or stop. Whenever a new throttle control cable assembly is installed, the throttle must be adjusted.

1. Assure engine is not running and high tension wire is pulled off the spark plug.

2. Move throttle control lever to the OFF position.

3. Loosen cable clamp screw until throttle cable is free to slide (Fig. 11).

4. Move carburetor control arm to the left until it contacts grounding bracket (Fig. 11). Pull throttle cable slightly to remove any slack, and tighten the cable clamp screw to lock the adjustment in place.

PREPARING MOWER FOR STORAGE

1. Drain fuel: refer to Draining Fuel, page 8. If fuel is not drained, gum-like varnish deposits will form and cause poor engine operating, even starting problems.

2. Pull high tension wire off spark plug, and remove plug from cylinder head. Pour 30 ml of SAE 30 oil into spark plug hole. Pull recoil starter handle slowly to distribute oil inside of cylinder. Then install spark plug and tighten it to 20.3 N·m. If torque wrench is not used, tighten plug firmly. DO NOT INSTALL HIGH TENSION WIRE ON SPARK PLUG.

3. Drain oil from crankcase; do not fill crankcase with oil at this time.

4. Clean underside of housing: refer to Cleaning Mower Housing, page 8.

5. Check condition of blade: refer to Inspecting/Removing/Sharpening Blade, page 8.

6. Tighten all nuts, bolts and screws.

7. Clean dirt and chaff from cylinder, cylinder head fins and blower housing. Also remove

MAINTENANCE

grass clippings, dirt and grime from external parts of the engine, shrouding and top of mower housing.

8. Clean air cleaner: refer to Servicing Air Cleaner, page 7.

9. Lubricate the wheels: refer to Lubrication, page 9.

10. Fill crankcase with oil.

11. Touch up all rusted or chipped paint surfaces. Toro Re-Kote paint is available from an Authorized TORO Service Dealer.

12. Store mower in a clean dry place. Cover mower to keep it clean and protected.

MAINTENANCE RECORD

Date	Hours Used	Air Cleaner Service	Lubrication	Sharpen Blade	Winter Storage	Spring Service	Spark Plug

MAINTENANCE RECORD

Date	Hours Used	Air Cleaner Service	Lubrication	Sharpen Blade	Winter Storage	Spring Service	Spark Plug

TORO SERVICE SUPPORT

If help — concerning safety, set-up, operation and maintenance or troubleshooting — is ever needed, contact the local Authorized TORO Service Dealer or Distributor. Refer to the "Yellow Pages" for assistance. In addition to skilled service technicians, the dealer and distributor have factory approved accessories and replacement parts. Keep your Toro all TORO. Buy genuine TORO replacement parts and accessories.

PRODUCT IDENTIFICATION

A model number and a serial number decal is located at rear of mower housing, near the discharge door. Always refer to specific numbers on this decal in correspondence or when replacement parts are needed.

COMPLIANCE WITH RADIO INTERFERENCE REGULATIONS CERTIFIED
CERTIFIE CONFORME AU REGLEMENT SUR LE BROUILLAGE RADIOELECTRIQUE

Litho in U.S.A.