FORM NO. 3320-495 Rev. A

TORO

MODEL NO. 20745C-8900001 - 9900001 & UP

OPERATOR'S MANUAL

18" (0.46 m) HP 4-in-1 REAR BAGGER

FINGERTIP START

ENGLISH

⚠ SAFETY INSTRUCTIONS

BEFORE OPERATING

1. Read this manual carefully before operating the mower. Become familiar with the controls and proper use of the mower. Never allow children to operate the mower or adults to operate it without proper instructions.
2. Keep everyone, especially children and pets, away from the area of operation. Thoroughly inspect area where mower will be used and remove sticks, stones, wire and debris.
3. Wear long pants and substantial shoes. Do not operate mower while wearing open sandals or when barefoot.
4. Check fuel level before starting engine. Do not fill fuel tank indoors, when the engine is running, or until engine cools for several minutes after running. Wipe up spilled gasoline before starting engine.
5. Keep all guards, shields and safety devices in place. Repair or replace defective or damaged parts.

WHILE OPERATING

6. Do not run engine indoors.
7. Always maintain secure footing. Keep a firm grip on the handle and walk; never run. Never operate mower in wet grass. Mow only in daylight or good artificial light.
8. Mow across the face of slopes; never up and down. Use extreme caution when changing direction on slopes. Do not mow excessively steep slopes.
9. Keep face, hands and feet away from the mower housing and cutter blade when the engine is running. Stay behind the handle until the engine stops and keep clear of discharge opening at all times.
10. When mulching, keep grass bag in place and assure chute door is closed. When bagging grass, stop engine and assure chute door is closed before the bag is removed and emptied.
11. Shut engine off and wait for all moving parts to stop before unclogging chute.
12. Since the blade rotates for a few seconds after the throttle control is moved to OFF, stay behind the handle until all moving parts stop.
13. After striking a foreign object or if mower vibrates abnormally, stop engine and remove wire from spark plug. Check mower for damage and make all repairs before using mower again.
14. Stop the engine before adjusting the height-of-cut.
15. Stop the engine before crossing a gravel driveway, road or sidewalk.
16. Stop engine before leaving the operator's position — behind the handle. Disconnect high tension wire from spark plug if mower will be unattended.
17. Do not touch muffler or engine while it is running or shortly after it is stopped because muffler or engine will be hot enough to cause a burn.

MAINTENANCE

18. Perform only those maintenance instructions described in this manual. If major repairs are ever needed or if assistance is desired, contact an Authorized TORO Service Dealer.
19. Before mower is cleaned, inspected, serviced or adjusted, stop engine and disconnect high tension wire from spark plug. Keep wire away from plug to prevent accidental starting.
20. To assure the mower is in safe operating condition, frequently check and keep all nuts, bolts and screws tight. Assure blade bolt is tightened to proper specifications.
21. To reduce fire hazard, keep engine free of excessive grease, grass, leaves and accumulations of dirt.
22. Check grass catcher bag frequently for wear or deterioration. Replace with a new bag for your protection.
23. Allow engine to cool before storing mower in any enclosure. Do not store mower near any open flame or where gasoline fumes may be ignited by a spark.

⚠ SAFETY INSTRUCTIONS

24. Do not overspeed the engine by changing governor settings.

25. At the time of manufacture the mower conformed to the safety standards in effect for rotary mowers. To assure optimum performance and continued safety certification of the mower, use genuine TORO replacement parts and accessories. Replacement parts and accessories made by other manufacturers may result in non-conformance with the safety standards, and that could be dangerous.

SYMBOL GLOSSARY



Safety alert



Keep hands and feet away from rotating blade



Place foot here when starting



Keep hands away



Keep all guards in place



Engine start



Choke on



Keep bystanders from area being mowed



Never open chute door on mower when engine is running, unless grass bag or side discharge attachment is installed



Neutral



Stop engine before leaving operator position



Slow



Fast



Read and understand operator's manual



Engine speed (Throttle)

©The Toro Company — 1987, Rev. 1988

TABLE OF CONTENTS

	Page
Set-Up Instructions	3
Before Operating	4
Operating Instructions	5-7
Maintenance	7-9
Servicing Air Cleaner	7
Replacing Spark Plug	7
Draining Fuel	8
Cleaning Mower Housing	8
Inspecting/Removing/Sharpening Blade	8
Lubrication	9
Preparing Mower For Storage	9
Maintenance Record	10-11
Toro Service Support	12
Optional Spark Arrestor	12
Product Identification	12

SET-UP INSTRUCTIONS

INSTALL HANDLE AND BAG

1. LOWER HANDLE (Fig. 1) — Push ends of lower handle together and install on pivot pins. Insert bolts through hole in handle latches and install handle knobs. Tighten securely. Assure control cable is to the rear and inside of handle.

Note: Handle can be set in any of three positions, depending on operator height.

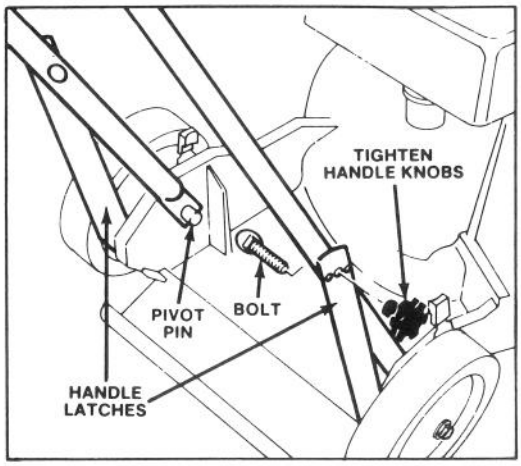

Figure 1

2. UPPER HANDLE (Fig. 2) — Secure upper and lower handles in place with handle bolts and nuts. Secure control cables in position with cable clips.

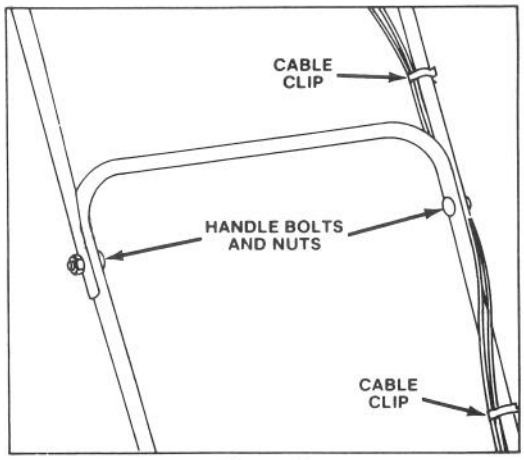

Figure 2

3. Install grass bag: refer to Using Grass Bag, page 6, steps 1-4.

BEFORE OPERATING

⚠ DANGER: Gasoline is extremely flammable and explosive under certain conditions. Do not smoke when handling fuel and keep fuel far away from open flames and sparks. Never buy more than a 30 day supply of gasoline. Store gasoline in an approved container and keep it out of the reach of children.

Refuel outdoors, only when engine is cold. Fill tank to within 1/4" to 1/2" (6 to 13 mm) from its top. This space is for expansion of fuel. Use funnel or spout to prevent spilling. Wipe up any spilled gas.

MIX GASOLINE AND OIL (Fig. 3)

This product uses a two-cycle engine which requires a mixture of gasoline and two-cycle oil (50:1 gas/oil ratio). Failure to use proper fuel mixture will cause serious engine damage.

1. OIL — For optimum performance, use Toro two-cycle oil available from your Toro dealer. A BIA TC-W approved two-cycle oil from a reputable oil company may be substituted. NEVER USE 4-CYCLE AUTOMOTIVE OILS SUCH AS SAE 30 or 10W30.

2. GASOLINE — Use leaded REGULAR. "No-lead" or "lead-free" gasoline is also acceptable. Gasoline substitutes, such as gasohol, methanol, gasoline containing methanol, white gas and gasoline additives must not be used because they may damage the engine. Do not use premium gas.

3. MIXING — In an approved gasoline container, thoroughly mix prescribed amount of gasoline and two-cycle oil (refer to Fuel Mixing Chart). DO NOT MIX FUEL IN MOWER FUEL TANK. FOR BETTER MIXING, OIL SHOULD BE AT ROOM TEMPERATURE.

4. Fill mower fuel tank to within 1/4" to 1/2" (6 to 13mm) from top of tank, not the filler neck. Install fuel tank cap securely.

50:1
Fuel Mixing Chart

Unit of Measure	Gasoline	Oil
U.S. Gallon	1 gallon	2.6 oz
Imperial Gallon	1 gallon	3 oz
Liter	1 liter	20 ml

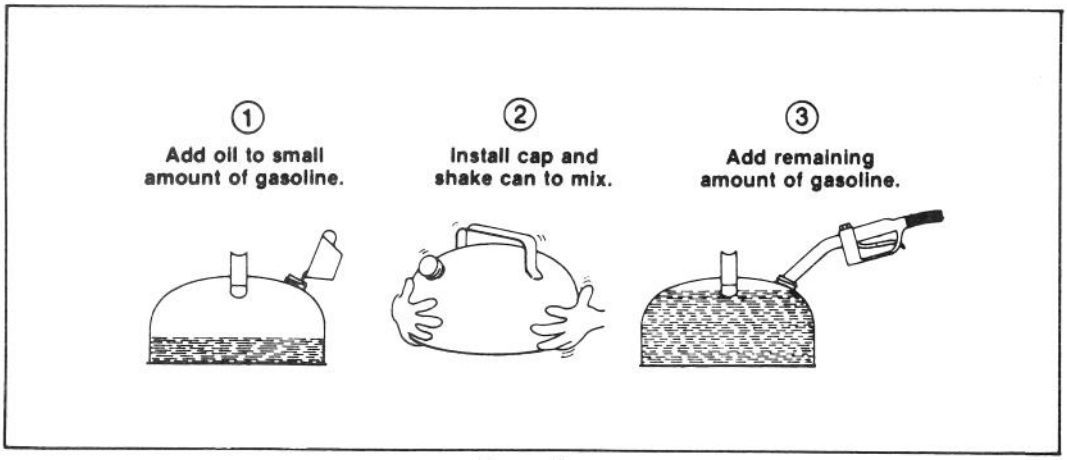

Figure 3

OPERATING INSTRUCTIONS

4-in-1 MOWING VERSATILITY

REAR BAG — Bag lush grass in the spring to help keep your lawn free of thatch forming clippings.

MULCH — In summer, when grass grows slower and is drier, mulch by closing chute door (Fig. 4). For convenience and protection, keep grass bag on mower.

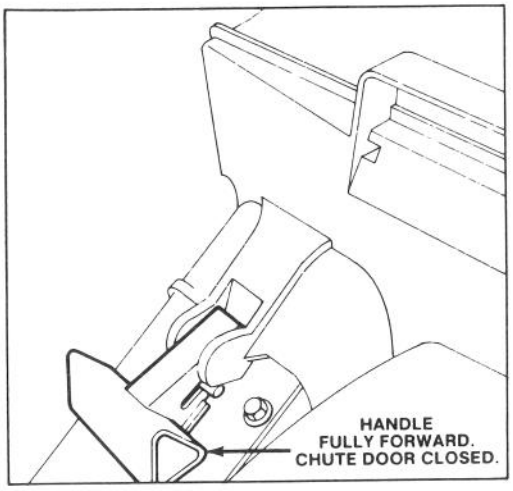

Figure 4

SIDE DISCHARGE — Disperse clippings with optional, rear-mounted side discharge chute which installs in seconds (Fig. 5).

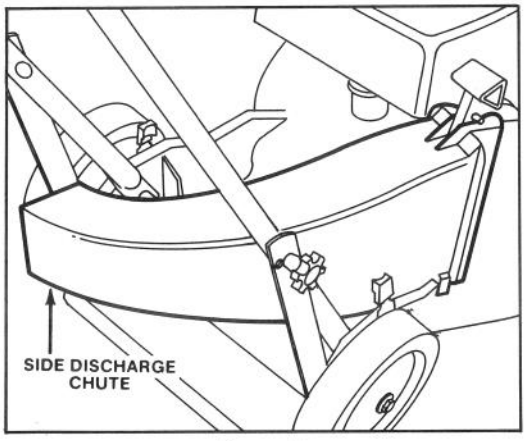

Figure 5

SHRED LEAVES — In fall, optional leaf shredder (Fig. 6) reduces leaves to a fraction of their original size while you bag. Minimizes emptying stops and number of trash bags used for disposal.

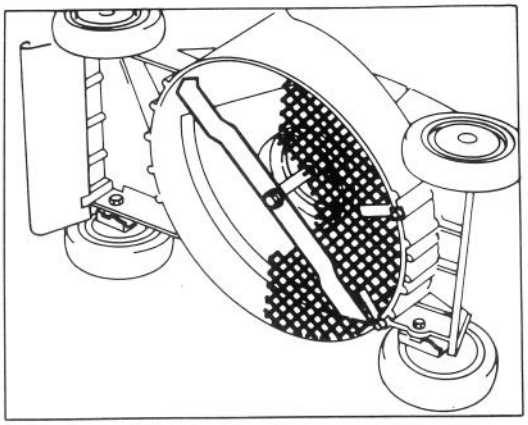

Figure 6

ADJUSTING HEIGHT-OF-CUT

Five letters cast into the housing represent each graduated increment (Fig. 7).

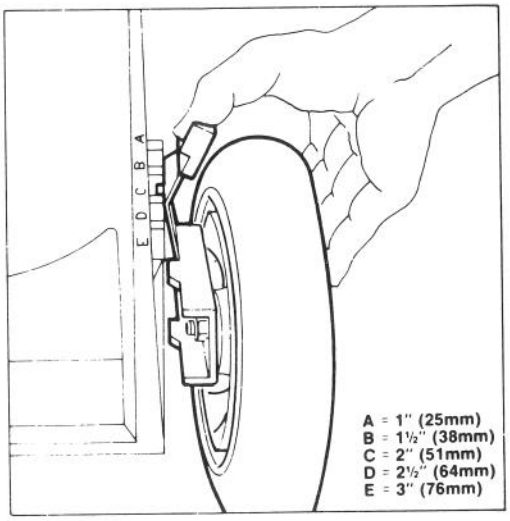

Figure 7

1. Stop the engine.
2. For easier adjustment, lift housing up so wheel is off ground. Squeeze adjusting lever toward wheel and move them to desired setting (Fig. 7). Assure pin on adjusting lever engages notch in housing. Adjust all wheels to the same setting.

OPERATING INSTRUCTIONS

STARTING AND STOPPING

1. CONTROLS (Fig. 8) — Throttle/choke control is on upper handle.

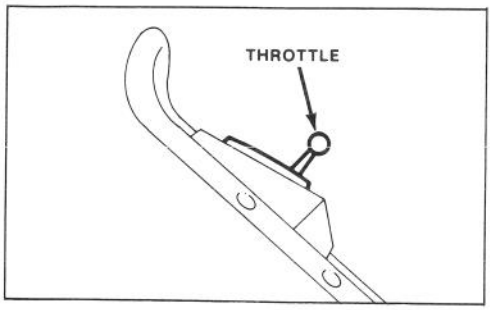

Figure 8

2. STARTING (Fig. 8) – Push wire onto spark plug. Move throttle control to CHOKE. Cover hole in center of primer with thumb and push once. Pull fingertip starter and regulate throttle as required when engine starts.

Note: Choke and primer are usually not necessary when warm engine is being started.

3. STOPPING (Fig. 8) – Move throttle control to OFF to stop engine and blade. Pull wire off spark plug if mower is unattended or not used.

USING GRASS BAG

Keep bag installed when bagging or mulching.

1. Stop engine and wait for all parts to stop.

2. Assure chute door handle is fully forward and pin is engaged in catch.

3. INSTALLING BAG (Fig. 9) – Hold front of bag frame and bag door together. Then place opening in bag door against flanges on rear chute and slide bag door down.

4. Pull chute door handle backward until pin locks bag in place (Fig. 10). Chute door in mower housing is now open.

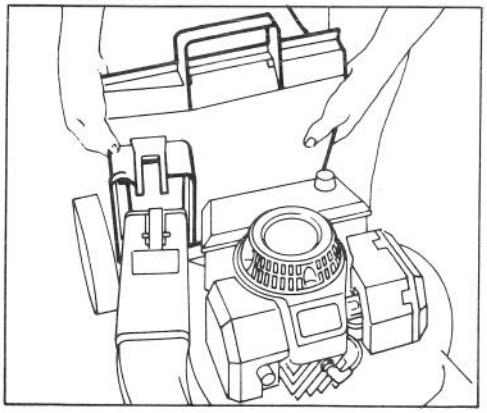

Figure 9

⚠ CAUTION

Except when side discharge attachment is used, never open chute door on mower when engine is running unless grass bag is properly installed, because grass clippings and other debris discharges with enough force to cause injury.

The grass bag material will catch and contain the majority of foreign objects, such as small stones and other similar debris. The bag material, however, is subject to normal wear and deterioration. So check the bag frequently, and if it is defective, install a new genuine TORO replacement bag that has this or similar warning.

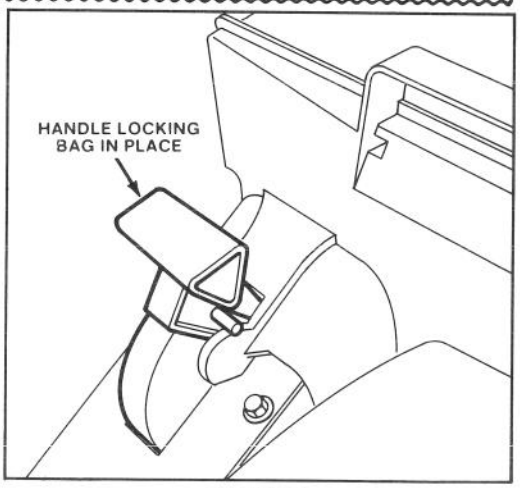

Figure 10

5. EMPTYING BAG — Stop engine and wait for all parts to stop. Move chute door handle forward to engage the locking pin with catch (Fig. 4). Grasp handle at front and rear of bag and lift bag off mower. Gradually tip bag forward to empty clippings.

⚠ CAUTION: If chute door cannot be closed because grass clippings clog discharge area, gently move chute door handle back and forth until door can be closed completely. Do not force chute door closed because door or handle may be damaged. If door still cannot be closed, stop engine, disconnect spark plug wire and remove obstruction.

OPERATING INSTRUCTIONS

6. To reinstall bag, repeat steps 3 and 4.

OPERATING TIPS

1. CUTTING AND BAGGING — Best results are achieved when engine is running at maximum speed and only about 1/3 of the grass blade is cut. If long grass must be cut, use highest height-of-cut setting for first mowing. Then recut the grass at a more normal setting. If too long of grass is cut, mower may plug and cause engine to stall.

2. SHARP BLADE — Begin each cutting season with a sharp blade. Periodically file down nicks.

MAINTENANCE

CAUTION

Pull wire off spark plug before performing adjustments or maintenance.

SERVICING AIR CLEANER

Normally, clean air cleaner after every 50 operating hours. More frequent cleaning is required when mower is operated in dusty or dirty conditions.

1. Stop engine and pull wire off spark plug (Fig. 11).

2. Lift tabs at top of air cleaner cover and pivot cover down. Clean cover thoroughly (Fig. 11).

3. If outside of foam element is dirty, remove it from air cleaner body (Fig. 11). Clean thoroughly.

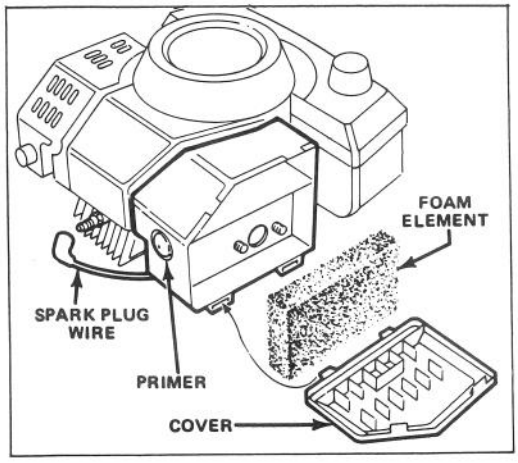

Figure 11

A. WASH foam element in a solution of liquid soap and warm water. Squeeze to remove dirt. Do not twist because foam may tear.

B. DRY by wrapping in a clean rag. Squeeze rag and foam element to dry.

C. SATURATE element with 5 teaspoons (25 ml) of SAE 30 engine oil. Squeeze element to remove excess oil and to distribute oil thoroughly. A damp element is desirable.

4. Install foam element and air cleaner cover.

IMPORTANT: Do not operate engine without air cleaner element because extreme engine wear and damage will likely result.

REPLACING SPARK PLUG

Use an NGKBPMR4A spark plug or equivalent. Correct air gap is 0.032" (0.81 mm). Remove plug after every 25 operating hours and check its condition.

1. Stop engine and pull wire off spark plug (Fig. 11).

2. Clean around spark plug and remove plug from cylinder head (Fig. 11).

IMPORTANT: Replace a cracked, fouled or dirty spark plug. Do not sand blast, scrape or clean electrodes because engine damage could result from grit entering cylinder.

3. Set air gap at 0.032" (0.81 mm) (Fig. 12). Install correctly gapped spark plug and gasket seal. Tighten plug firmly to 10 ft-lb (13.6 N·m).

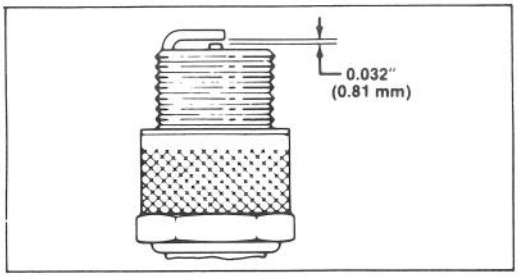

Figure 12

MAINTENANCE

CLEANING MOWER HOUSING

To assure optimum performance, keep underside of mower housing and grass deflector clean.

1. Drain fuel tank: refer to Draining Fuel, page 8.
2. Tip mower on its left side (Fig. 13).
3. Remove dirt and grass clippings that stick to housing by spraying it with a garden hose. Scrape out remaining debris with hardwood scraper. Avoid burrs and sharp edges.

DRAINING FUEL

1. Stop engine. Pull wire off spark plug.
2. Remove cap from fuel tank and use pump-type syphon to drain fuel into clean gas can.

Note: This is the only procedure recommended for draining fuel.

INSPECTING/REMOVING/SHARPENING BLADE

1. Stop engine and pull wire off spark plug.
2. Drain fuel from fuel tank: refer to Draining Fuel, page 8.
3. Tip mower on its left side (Fig. 13). Avoid rotating blade. Starting problems may result.

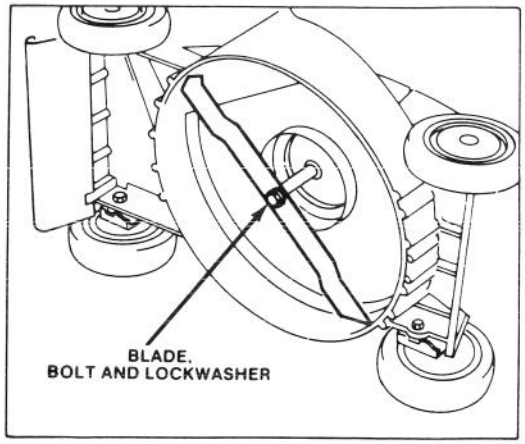

Figure 13

4. INSPECTING BLADE — Carefully examine blade for sharpness and wear, especially where flat and curved parts meet (Fig. 14A). Since sand and abrasive material can wear away the metal that connects the flat and curved parts of the blade, check blade before using the mower. If a slot or wear is noticed (Fig. 14B & C), replace blade. Refer to step 5.

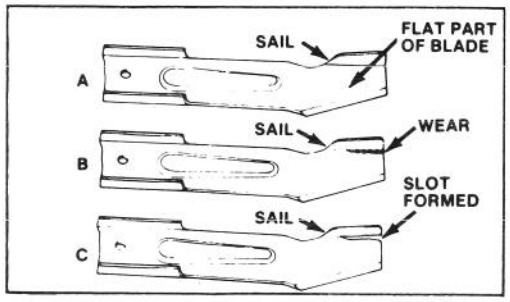

Figure 14

⚠ CAUTION

If blade is allowed to wear, a slot may form near the sail. Eventually a piece of blade may break off resulting in serious injury to yourself or a bystander.

5. REMOVING BLADE — Grasp end of blade using a rag or thickly padded glove. Remove blade bolt, lock washer and blade (Fig. 13).

Note: For optimum performance, install new blade before cutting season begins. During the year file down small nicks to maintain the cutting edge.

6. SHARPENING BLADE — Using a file, sharpen top side of blade and maintain original cutting angle (Fig. 15). The blade will remain balanced if same amount of material is removed from both cutting edges.

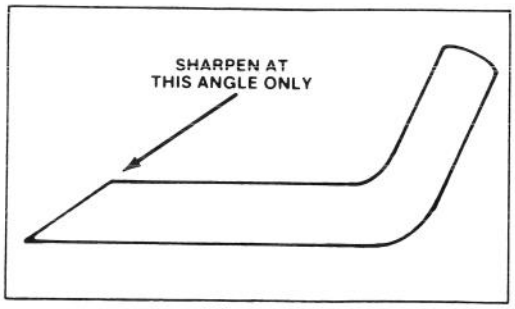

Figure 15

IMPORTANT: Check balance of blade by putting it on a blade balancer. An inexpensive balancer can be purchased at a hardware store. A balanced blade will stay in horizontal position and an unbalanced blade will settle to the heavy side. If blade is not balanced, file more metal off cutting edge on heavy end of blade.

7. Install sharp, balanced blade with blade bolt and lock washer. Sail part of blade must point toward top of mower housing to assure correct installation. Tighten the blade bolt to 50 ft-lb (68 N·m).

LUBRICATION

After every 25 operating hours or when season ends, front and rear wheels must be lubricated.

1. Apply 2 or 3 drops of light oil on inside of front and rear wheel bolts. Spin wheels to distribute oil into bushings. Wipe up excess oil.

PREPARING MOWER FOR STORAGE

1. Drain fuel: refer to Draining Fuel, page 8. If fuel is not drained, gum-like varnish deposits will form and cause poor engine operating, even starting problems.

2. Remove spark plug and pour 2 tablespoons of Toro two-cycle oil into hole in cylinder. Pull starter rope slowly to coat inside of cylinder. Install spark plug and tighten to 10 ft-lb (13.6 N·m). DO NOT INSTALL SPARK PLUG WIRE ON SPARK PLUG.

3. Clean underside of housing: refer to Cleaning Mower Housing, page 8.

4. Check condition of blade: refer to Inspecting/Removing/Sharpening Blade, page 8.

5. Tighten all nuts, bolts and screws.

6. Clean dirt and chaff from cylinder, cylinder head fins and blower housing. Also remove grass clippings, dirt and grime from external parts of the engine, shrouding and top of mower housing.

7. Clean air cleaner: refer to Servicing Air Cleaner, page 7.

8. Lubricate the wheels: refer to Lubrication, page 9.

9. Touch up all rusted or chipped paint surfaces. Toro Re-Kote paint is available from an Authorized TORO Service Dealer.

10. Store mower in a clean dry place. Cover mower to keep it clean and protected.

MAINTENANCE RECORD

Date	Hours Used	Air Cleaner Service	Lubrication	Sharpen Blade	Winter Storage	Spring Service	Spark Plug

MAINTENANCE RECORD

Date	Hours Used	Air Cleaner Service	Lubrication	Sharpen Blade	Winter Storage	Spring Service	Spark Plug

TORO SERVICE SUPPORT

If help — concerning safety, set-up, operation and maintenance or troubleshooting — is ever needed, contact the local Authorized TORO Service Dealer or Distributor. Refer to the "Yellow Pages" for assistance. In addition to skilled service technicians, the dealer and distributor have factory approved accessories and replacement parts. Keep your Toro all TORO. Buy genuine TORO replacement parts and accessories.

OPTIONAL SPARK ARRESTOR — PART #81-0200

If a spark arrestor is required because of local, state or federal regulations, it may be purchased at your local Authorized TORO Service Dealer. If mower is operated on any California forest, brush or grass covered land without a properly operating spark arrestor, the operator is violating state law, Section 4442 Public Resources Code.

PRODUCT IDENTIFICATION

A model number and a serial number decal is located at rear of mower housing, near the discharge door. Always refer to specific numbers on this decal in correspondence or when replacement parts are needed.

COMPLIANCE WITH RADIO INTERFERENCE REGULATIONS CERTIFIED
CERTIFIE CONFORME AU REGLEMENT SUR LE BROUILLAGE RADIOELECTRIQUE

Litho in U.S.A.