FORM NO. 3320-504 Rev. A

TORO®

MODEL NO. 16575C - 8900001-9900001 & UP

**OPERATOR'S MANUAL**

# 21" (0.53 m) HP SIDE DISCHARGE
FINGERTIP START

## ⚠ SAFETY INSTRUCTIONS

### BEFORE OPERATING

1. Read this manual carefully before operating the mower. Become familiar with the controls and proper use of the mower. Never allow children to operate the mower or adults to operate it without proper instructions.

2. Keep everyone, especially children and pets, away from the area of operation. Thoroughly inspect area where mower will be used. Remove sticks, stones, wire and debris.

3. Wear long pants and substantial shoes. Do not operate mower while wearing open sandals or when barefoot.

4. Check fuel level before starting engine. Do not fill fuel tank indoors, when the engine is running, or until engine cools for several minutes after running. Wipe up spilled gasoline before starting engine.

5. Keep all guards, shields and safety devices in place. Repair or replace defective or damaged parts.

6. Move drive control into DISENGAGE detent before trying to start engine. Engine will not start when drive control is in the ENGAGE position.

### WHILE OPERATING

7. Do not run engine indoors.

8. Always maintain secure footing. Keep a firm grip on the handle and walk; never run. Never operate mower in wet grass. Mow only in daylight or in good artificial light.

9. Mow across the face of slopes. never up and down. Use extreme caution when changing direction on slopes. Do not mow excessively steep slopes.

10. Keep face, hands and feet away from the mower housing and cutter blade when the engine is running. Stay behind the handle until the engine stops and keeps clear of discharge opening at all times.

11. During operation, grass deflector or complete bagging assembly must be installed on mower.

12. Shut engine off and wait for all moving parts to stop before unclogging chute or removing grass catcher.

13. Since the blade rotates for a few seconds after throttle control is moved to OFF, stay behind the handle until all moving parts stop.

14. After striking a foreign object or if mower vibrates abnormally, stop engine and remove wire from spark plug. Check mower for damage and make all repairs before using mower again.

15. Stop the engine before adjusting the height-of-cut.

16. If a gravel driveway, road or sidewalk must be crossed, stop the engine so loose sand and rocks are not thrown.

17. Stop engine before leaving the operator's position – behind the handle. Disconnect wire from spark plug if mower will be unattended.

18. Do not touch muffler or engine while it is running or shortly after it is stopped because muffler and engine will be hot enough to cause a burn.

### MAINTENANCE

19. Perform only those maintenance instructions described in this manual. If major repairs are ever needed or if assistance is desired, contact an Authorized TORO Service Dealer.

20. Before mower is cleaned, inspected, serviced or adjusted, stop engine and disconnect wire from spark plug. Keep wire away from plug to prevent accidental starting.

21. To assure the mower is in safe operating condition, frequently check and keep all nuts, bolts and screws tight. Assure blade bolt is tightened to proper specification.

22. To reduce fire hazard, keep engine free of excessive grease, grass, leaves and accumulations of dirt.

23. Check optional grass catcher bag frequently for wear, tears or deterioration. Replace with a new bag for your protection.

24. Allow engine to cool before storing mower in any enclosure. Do not store mower near any open flame or where gasoline fumes may be ignited by a spark.

25. Do not overspeed the engine by changing governor settings.

26. At the time of manufacture the mower

# ⚠ SAFETY INSTRUCTIONS

26. At the time of manufacture the mower conformed to the safety standards in effect for rotary mowers. To assure optimum performance and continued safety certification of the mower, use genuine TORO replacement parts and accessories. Replacement parts and accessories made by other manufacturers may result in non-conformance with the safety standards, and that could be dangerous.

## SYMBOL GLOSSARY



Safety alert



Keep hands and feet away from rotating blade



Engine start



Keep hands away



Keep all guards in place



Engine speed (Throttle)



Keep bystanders from area being mowed



Slow



Fast




Stop engine before leaving operator position



Read and understand operator's manual



©The Toro Company — 1988, Rev. 1989

# TABLE OF CONTENTS


| | Page |
|---|---|
| Set-Up Instructions | 3 |
| Before Operating | 4 |
| Operating Instructions | 5-6 |
| Maintenance | 6-10 |
| Servicing Air Cleaner | 6 |
| Changing Crankcase Oil | 6 |
| Adjusting Throttle | 7 |
| Replacing Spark Plug | 7 |
| Cleaning Mower Housing | 7 |
| Draining Fuel | 7 |
| Inspecting, Removing, Sharpening Blade | 8 |
| Lubrication | 8 |
| Preparing Mower For Storage | 10 |
| TORO Service Support | 10 |
| Product Identifiction | 10 |


# SET-UP INSTRUCTIONS

### INSTALL HANDLES AND STARTER ROPE

1. LOWER HANDLES (Fig. 1) – Push ends of handle together and install on pivot pins. Move handle and latches backward until handle studs snap into center hole. Push hair pin cotters through holes in pivot pins.

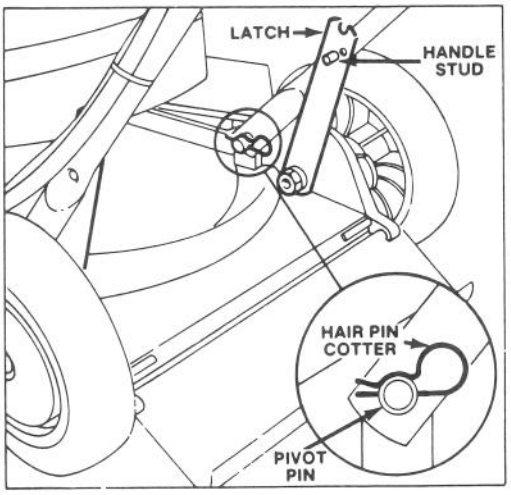


Figure 1

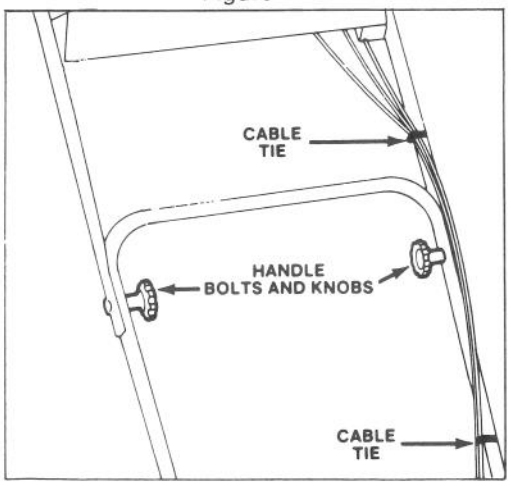


Figure 2

2. UPPER HANDLE (Fig. 2) – Secure upper and lower handles in place with handle bolts and knobs. Control cables must be in front of lower handle cross member. Secure control cables in position with cable ties.

3. STARTER ROPE (Fig. 3) – Pull starter rope through opening in rope guide. By squeezing control bar (Fig. 5) against handle, blade brake will release and allow rope to be pulled easily up to rope guide.

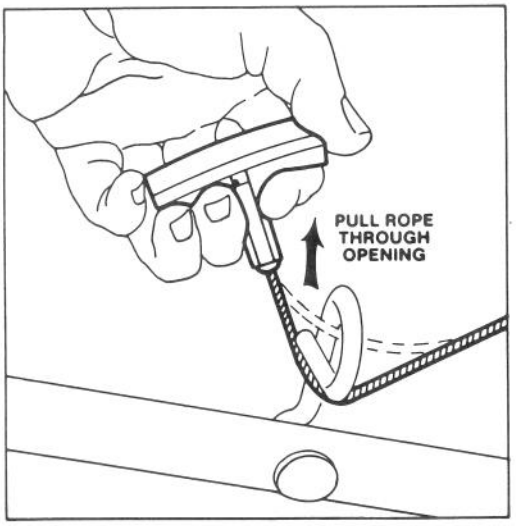


Figure 3

# BEFORE OPERATING

**⚠ DANGER: Gasoline is extremely flammable and explosive under certain conditions. Do not smoke when handling fuel and keep fuel far away from open flames and sparks. Never buy more than a 30 day supply of gasoline. Store gasoline in an approved container and keep it out of the reach of children.**

**Refuel outdoors, only when engine is cold. Fill tank to within 1/4" to 1/2" (6 to 13 mm) from its top. This space is for expansion of fuel. Use funnel or spout to prevent spilling. Wipe up any spilled gas.**

## FILL CRANKCASE WITH OIL

**Initially, crankcase must be filled with 21 ounces (.621 l) of SAE 30 oil. Use any high quality detergent oil having the American Petroleum Institute – API – "service application" MS, SC, SD, SE or SF.**

Before each use, assure oil level is in SAFE range. Add oil if level is low.

1. Position mower on level surface and clean around oil dipstick.

2. Remove dipstick by rotating cap counter-clockwise 1/4 turn.

3. Wipe dipstick and insert it into filler neck. Rotate cap clockwise 1/4 turn. Then remove dipstick and check oil level of oil (Fig. 4). If level is low, add only enough to raise level to FULL mark on dipstick. DO NOT FILL ABOVE FULL MARK BECAUSE ENGINE COULD BE DAMAGED WHEN STARTED.

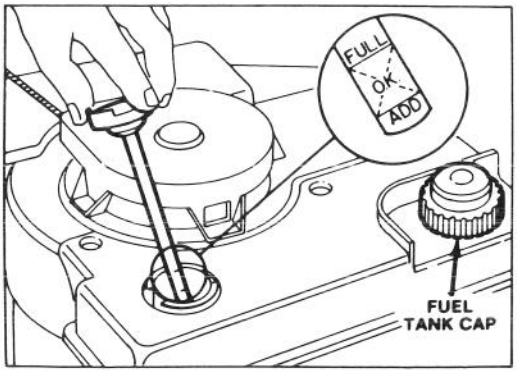


Figure 4

4. Insert dipstick into filler neck and rotate cap clockwise 1/4 turn to lock.

**Note:** Check oil level each time mower is used or after every 5 operating hours. Initially, change oil after the first 2 hours of operation; thereafter, change oil after every 25 hours of operation. More frequent oil changes are required in dusty or dirty conditions.

## FILL FUEL TANK WITH GASOLINE

**Note: The Toro Company strongly recommends the use of fresh, clean, UNLEADED regular grade gasoline in Toro gasoline powered products. Unleaded gasoline burns cleaner, extends engine life, and promotes food starting by reducing the build-up of combustion chamber deposits. Leaded gasoline can be used if unleaded is not available..**

1. Clean around fuel tank cap and remove cap from tank (Fig. 4). Using unleaded gasoline, fill fuel tank to within 1/2 inch (13 mm) from top of tank.

2. Install fuel tank cap and wipe up any spilled gasoline.

**IMPORTANT: Do not mix oil with the gasoline. Never use methanol, gasoline containing methanol, gasohol containing more than 10% ethanol, gasoline additives, premium gasoline, or white gas because engine fuel system damage could result.**

# OPERATING INSTRUCTIONS

## 2-IN-1 MOWING VERSATILITY

SIDE DISCHARGE – In summer, disperse clippings to the side when grass grows slower and is drier.

SIDE BAG – Optional side bag kit lets you bag lush grass in spring to help keep your lawn free of thatch forming clippings. In the fall, bag leaves while you mow to eliminate the hand-blistering raking job.

## STARTING AND STOPPING

1. CONTROLS – Throttle, control bar and fingertip starter are on upper handle (Fig. 5).
2. Push wire onto spark plug.
3. STARTING – Move throttle to FAST and hold control bar against handle. Pull fingertip starter and regulate throttle as desired when engine starts (Fig. 5). If engine does not start after 2 or 3 pulls, wait 10 seconds for carburetor prime well to refill with gasoline.
4. COLD START – Before starting engine when temperature is below 50 F (10 C), push cold start primer 5 times (Fig. 8), pausing 2 seconds between each push.

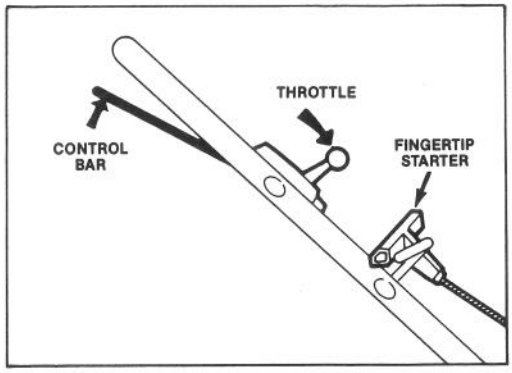


Figure 5

5. STOPPING (Fig. 5) – Release control bar to stop engine and blade. Pull wire off spark plug if mower is unattended or not used.

## OPERATING TIPS

1. BEFORE OPERATING – Assure engine, brake and control bar function properly. When control bar is released, engine and blade are designed to stop.
2. CUTTING AND BAGGING – To improve quality of cut, discharge clippings toward previously cut area. Best results are normally achieved when engine runs at maximum speed and only about 1/3 of the grass blade is cut. If long grass must be cut, use highest height-of-cut setting for first mowing. Then recut grass at a more normal setting. If too long of grass is cut or optional bag is allowed to get too full, discharge chute may plug and cause engine to stall. Empty optional grass bag often.
3. SHARPEN BLADE – Begin each cutting season with a sharp blade. Periodically file down nicks.

## ADJUSTING HEIGHT-OF-CUT

Five notches cast into the housing represent each graduated increment (Fig. 6).

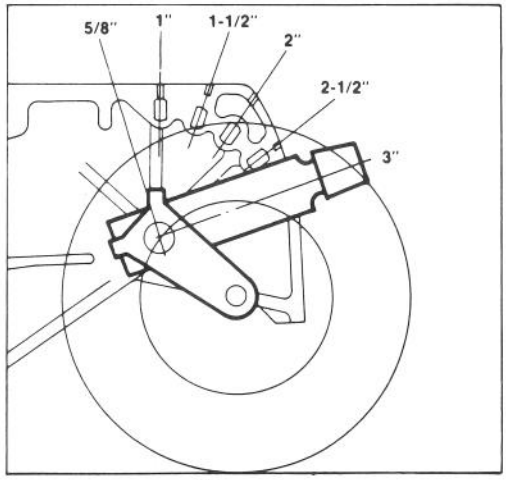


Figure 6

1. Stop the engine and pull wire off spark plug.
2. For easier adjustment, lift housing up so wheel is off ground. Squeeze adjusting lever toward wheel (Fig. 7) and move them to desired setting. Assure pin on adjusting lever engages notch in housing. Adjust all wheels to the same setting.

**Note:** Front wheels can be adjusted to 5/8-inch. Use this setting with 1-inch rear wheel setting.

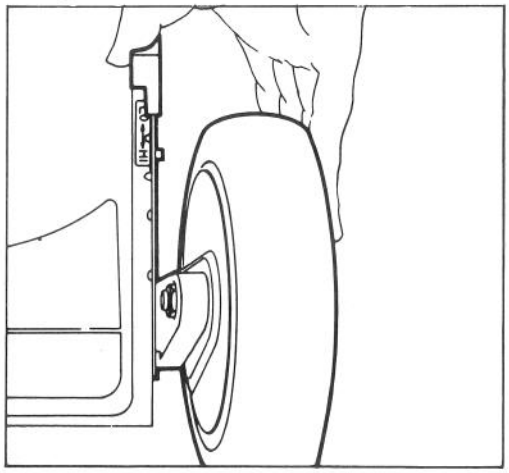

Figure 7

# MAINTENANCE

**⚠ CAUTION**

**Pull wire off spark plug before performing adjustments or maintenance.**

## SERVICING AIR CLEANER

Normally, clean air cleaner after every 25 operating hours. More frequent cleaning is required when mower is operated in dusty or dirty conditions.

1. Stop engine and pull wire off spark plug (Fig. 8).
2. Place fingers under right side of cover and lift it up (Fig. 8). Clean inside and outside of cover if it is dirty.

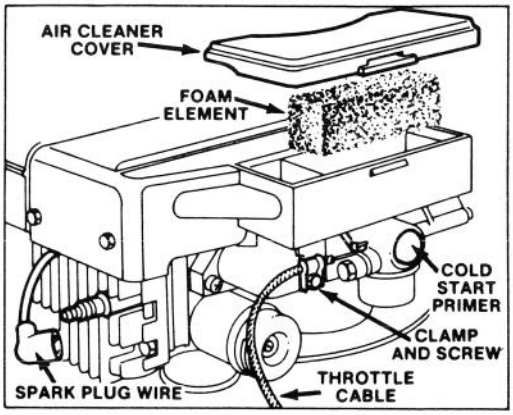


Figure 8

3. Look at top of air cleaner element (Fig. 8). If it is dirty, the element must be removed from air cleaner body (Fig. 8) and cleaned.

A. WASH foam element in a solution of liquid soap and warm water. Squeeze to remove dirt. Do not twist because foam may tear.

B. DRY by wrapping in a clean rag. Squeeze rag and foam element to dry.

C. SATURATE element with 5 teaspoons (25 ml) of SAE 30 engine oil. Squeeze element to remove excess oil and to distribute oil thoroughly. A damp element is desirable.

4. Install foam element and air cleaner cover.

**IMPORTANT: Do not operate engine without air cleaner element because extreme engine wear and damage will likely result.**

## CHANGING CRANKCASE OIL

Change oil after the first 2 operating hours and after every 25 hours thereafter. Since warm oil drains better and carries more contaminants than cold oil, run engine for a minute or so before draining oil.

1. Stop engine and pull wire off spark plug.
2. Drain fuel tank: refer to Draining Fuel, page 7.
3. Remove dipstick. Tip mower forward and empty all oil into drain pan (Fig. 9). Tip mower down and up a few times to ensure oil drains completely.

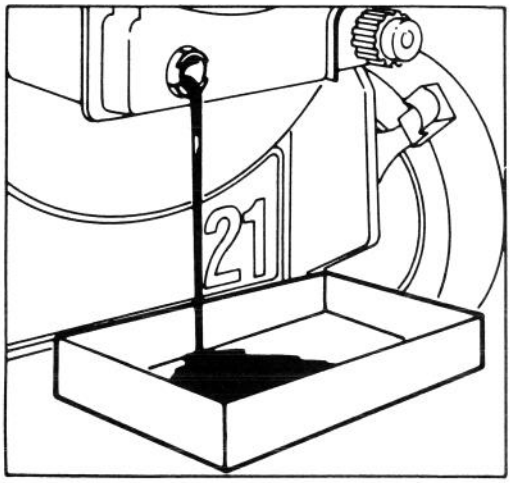


Figure 9

4. After draining, fill engine with fresh oil; refer to Fill Crankcase With Oil, page 4.

## ADJUSTING THROTTLE

Throttle control adjustment may be required if engine does not start or stop. Whenever a new throttle control cable is installed, throttle must be adjusted.

1. Stop engine and pull wire off spark plug.
2. Move throttle control lever to the OFF position.
3. Loosen cable clamp screw until throttle cable is free to slide (Fig. 8).
4. Move carburetor control arm to the left until it contacts grounding bracket (Fig. 8). Pull throttle cable slightly to remove any slack, and tighten the cable clamp screw to lock the adjustment in place.

## REPLACING SPARK PLUG

Use a Champion RJ-17LM spark plug or equivalent. Correct air gap is 0.030" (0.75 mm). Remove plug after every 25 operating hours and check its condition.

1. Stop engine and pull wire off spark plug (Fig. 8).
2. Clean around spark plug and remove plug from cylinder head (Fig. 8).

# MAINTENANCE

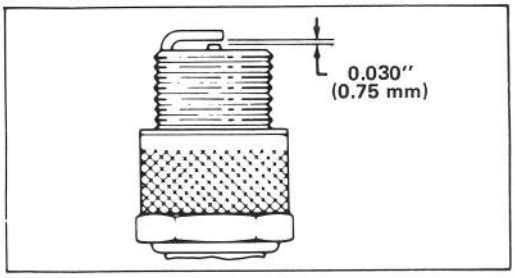


Figure 10

**IMPORTANT: Replace a cracked, fouled or dirty spark plug. Do not sand blast, scrape or clean electrodes because engine damage could result from grit entering cylinder.**

3. Set air gap at 0.030" (0.75 mm) (Fig. 10). Install correctly gapped spark plug and gasket seal. Tighten plug firmly to 15 ft-lb. (20.4 N-m).

## CLEANING MOWER HOUSING

To assure optimum performance, keep underside of mower housing and grass deflector clean.

1. Drain fuel tank: refer to Draining Fuel, page 7.
2. Tip mower on its left side (Fig. 12).
3. Remove dirt and grass clippings that stick to housing by spraying it with a garden hose. Scrape out remaining debris with hardwood scraper. Avoid burrs and sharp edges.

## DRAINING FUEL

1. Stop engine. Pull wire off spark plug.
2. Squeeze ends of clip holding fuel line on fuel tank fitting (Fig. 11). Slide clip down fuel line.

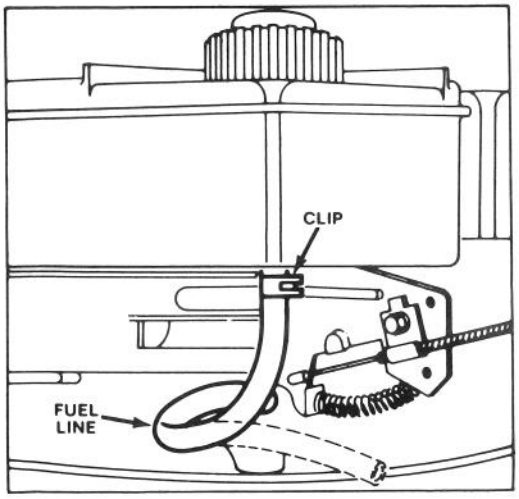


Figure 11

## INSPECTING, REMOVING, SHARPENING BLADE

1. Stop engine and pull wire off spark plug.
2. Drain fuel tank: refer to Draining Fuel, page 7.
3. Tip mower on its left side (Fig. 12).

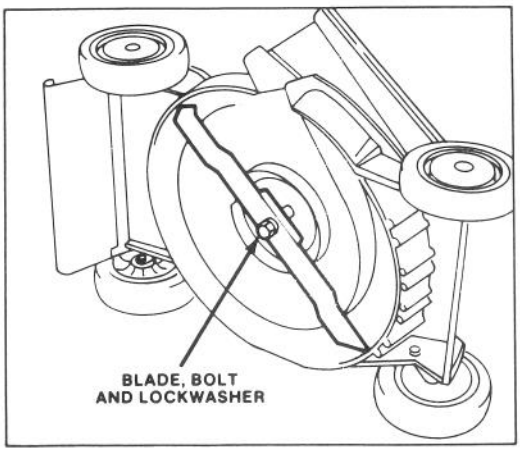


Figure 12

4. INSPECTING BLADE – Carefully examine blade for sharpness and wear, especially where flat and curved parts meet (Fig. 13A). Since sand and abrasive material can wear away the metal that connects the flat and curved parts of the blade, check blade before using the mower. If a slot or wear is noticed (Fig. 13B & C), replace blade. Refer to step 5.

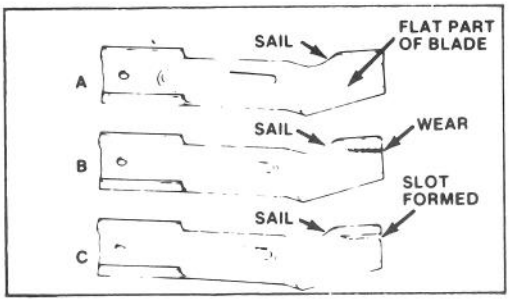


Figure 13

**CAUTION**

**If blade is allowed to wear, a slot may form near the sail. Eventually a piece of blade may break off resulting in serious injury to yourself or a bystander.**

# MAINTENANCE

5. REMOVING BLADE – Grasp end of blade using a rag or thickly padded glove. Remove blade bolt, lockwasher and blade (Fig. 12).

**Note:** For optimum performance, install new blade before cutting season begins. During the year file down small nicks to maintain the cutting edge.

6. SHARPENING BLADE – Using a file, sharpen top side of blade and maintain original cutting angle (Fig. 14). The blade will remain balanced if same amount of material is removed form both cutting edges.

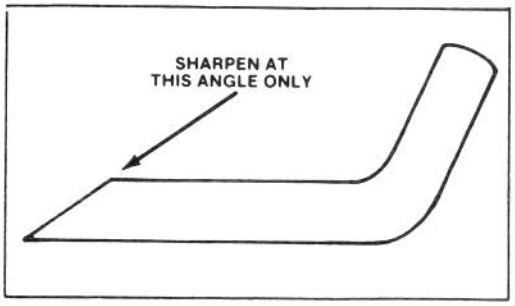


Figure 14

**IMPORTANT: Check balance of blade by putting it on a blade balancer. An inexpensive balancer can be purchased at a hardware store. A balanced blade will stay in horizontal position and an unbalanced blade will settle to the heavy side. If blade is not balanced, file more metal off cutting edge on heavy end of blade.**

7. Install sharp, balanced blade with lockwasher and blade bolt. Sail part of blade must point toward top of mower housing to assure correct installation. Tighten the blade bolt to 50 ft-lb (68 N-m).

## LUBRICATION

After every 25 operating hours or when season ends, front and rear wheels must be lubricated.

1. OIL FRONT AND REAR WHEELS – Apply 2 or 3 drops of light oil on inside of wheel bolts. Spin wheels to distribute oil into bushings.

## PREPARING MOWER FOR STORAGE

1. Drain fuel: refer to Draining Fuel, page 7. Then start engine and let it idle until all fuel is consumed and engine stops. If fuel is not drained completely, gum-like varnish deposits will form and cause poor engine operation, even starting problems.

2. Drain oil: refer to Changing Crankcase Oil, page 8. After oil is drained do not fill crankcase with oil until the following steps (3-9) are completed.

3. Remove spark plug and pour 2 tablespoons of SAE 30 oil into hole in cylinder. Install spark plug and tighten to 15 ft-lb (20.4 N-m). DO NOT INSTALL HIGH TENSION WIRE ON SPARK PLUG.

4. Clean underside of housing: refer to Cleaning Mower housing.

5. Check condition of blade: refer to Inspecting/Removing/Sharpening Blade.

6. Tighten all nuts, bolts and screws.

7. Clean dirt and chaff from cylinder, cylinder head fins and blower housing. Also remove grass clippings, dirt and grime from external parts of the engine, shrouding and top of mower housing.

8. Touch up all rusted or chipped paint surfaces. Toro Re-Kote paint is available from an Authorized TORO Service Dealer.

9. Fill crankcase with oil: refer to Fill Crankcase With Oil.

## PRODUCT IDENTIFICATION

A model number and a serial number decal is located at rear of mower housing, near the discharge door. Always refer to specific numbers on this decal in correspondence or when replacement parts are needed.

## TORO SERVICE SUPPORT

If help — concerning safety, set-up, operation and maintenance or troubleshooting — is ever needed, contact the local Authorized TORO Service Dealer or Distributor. Refer to the "Yellow Pages" for assistance. In addition to skilled service technicians, the dealer and distributor have factory approved accessories and replacement parts. Keep your TORO all TORO. Buy genuine TORO replacement parts and accessories.

## MAINTENANCE RECORD

| Date | Hours Used | Air Cleaner Service | Lubrication | Sharpen Blade | Winter Storage | Spring Service | Spark Plug |
|---|---|---|---|---|---|---|---|
| | | | | | | | |
| | | | | | | | |
| | | | | | | | |
| | | | | | | | |
| | | | | | | | |
| | | | | | | | |
| | | | | | | | |
| | | | | | | | |
| | | | | | | | |
| | | | | | | | |
| | | | | | | | |
| | | | | | | | |
| | | | | | | | |
| | | | | | | | |
| | | | | | | | |
| | | | | | | | |
| | | | | | | | |
| | | | | | | | |


TORO®