FORM NO. 3320-547

TORO®

MODEL NO. 38054 – 0000001 & UP

OPERATOR'S MANUAL

521 SNOWTHROWER

⚠ SAFETY INSTRUCTIONS

The 3521 and 521 SNOWTHROWERS meet or exceed the Outdoor Power Equipment Institute's safety standards for snowthrowers; thus, Toro proudly displays the OPEI safety seal. To assure maximum safety, optimum performance, and to gain knowledge of the product, it is essential that you or any other operator of the snowthrower read and understand the contents of this manual before the engine is ever started. Pay particular attention to the safety symbol which means CAUTION, WARNING or DANGER — "personal safety instruction". Read and understand the instruction because it has to do with safety. Failure to comply with the instruction may result in personal injury.

The following instructions are comparable to the Instructions For Safe Snowthrowing adopted by ANSI – American National Standards Institute. The snowthrower is designed and tested to offer reasonable safe service; however, failure to operate in accordance with the following Safety Instructions MAY RESULT IN PERSONAL INJURY.

BEFORE OPERATING

1. Read and understand the contents of this manual before starting and operating the machine. Become familiar with all controls and know how to stop the engine quickly.

2. Keep everyone, especially children and pets, away from the area of operation. Never allow children to operate the snowthrower.

3. Inspect area thoroughly where snowthrower will be used. Remove doormats, sleds, boards, sticks, wire, and any other foreign objects which might be picked up and thrown by the snowthrower.

4. Keep all shields and safety devices in place. If a shield, safety device or decal is defective or damaged, repair or replace it before operation is commenced. Also, tighten any loose nuts, bolts, and screws.

5. Wear adequate winter clothing and footwear that will improve footing on slippery surfaces. Do not wear loose fitting clothing that could possibly get caught in moving parts.

6. Adjust both skids so auger housing clears gravel or crushed rock surfaces.

7. Before starting the engine, assure auger drive control and wheel drive control are in disengaged position.

8. Fill fuel tank with gasoline before starting the engine. Avoid spilling any gasoline. Since gasoline is highly flammable, handle it carefully. DO NOT SMOKE.

A. Use an approved gasoline container.

B. Fill fuel tank outdoors and only when engine is not runniing. Engine must be cool to prevent a potential fire hazard.

C. Open doors if engine will be run in the garage because exhaust fumes are dangerous and could possibly be deadly. Do not run engine indoors.

D. Wipe up any gasoline that spilled, and install gasoline container cap securely before starting the engine.

WHILE OPERATING

9. Keep people and pets a safe distance away from the snowthrower and area of operation.

10. Allow engine and machine to warm up for about 2 minutes to adjust to outdoor temperature before clearing snow.

11. Do not run engine indoors, except when starting engine. When starting engine indoors, open outside doors because exhaust gasses are dangerous.

12. Operate the snowthrower only when there is good visibility or light. Always maintain secure footing and keep a firm grip on the handles, especially when operating in reverse.

13. Be attentive when using the snowthrower, and stay alert for holes in the terrain and other hidden hazards. Be careful when clearing snow from a gravel drive because stones could

©The Toro Company - 1989

be picked up and thrown if the skids are not adjusted so auger housing clears all rocks.

14. STAY BEHIND THE HANDLES AND AWAY FROM DISCHARGE OPENING WHILE OPERATING THE SNOWTHROWER. Keep face, hands, feet and any other part of your body or clothing away from concealed, moving or rotating parts.

15. Do not make any adjustments while the engine is running, with the exception of carburetor adjustments.

16. Never operate snowthrower near bystanders, glass enclosures, automobiles and trucks, window wells or a drop-off without proper adjustment of the snow discharge angle.

17. Clear snow from slopes by going up and down; never across the face, and use caution when changing directions. Never clear snow from steep slopes.

18. Do not overload the snowthrower by clearing snow at too fast a rate.

19. If a solid object is hit or snowthrower vibrates abnormally, shut engine off and wait for all movement to stop. Pull high tension wire off spark plug and check snowthrower immediately for possible damage, an obstruction or loose parts. Vibration is generally a warning of trouble. Repair any damage before restarting engine and operating snowthrower again.

20. Do not touch engine while it is running or soon after it is stopped because the engine will be hot enough to cause a burn. Do not add oil or check oil level in crankcase when engine is running.

21. Before leaving the operator's position — behind handles — assure traction and auger drive controls are in DISENGAGE position and rotate ignition key to OFF. Remove key from switch if snowthrower will be left unattended.

22. Before adjusting, cleaning, repairing and inspecting the snowthrower, and before unclogging the discharge chute, shut engine off and wait for all moving parts to stop. Also, pull high tension wire off spark plug and keep wire away from the plug to prevent accidental starting. Use a stick to remove obstructions.

23. Release auger drive control to assure it is disengaged before transporting or storing the snowthrower. Never operate snowthrower at high transport speeds on slippery surfaces. Use care when backing.

24. Let engine run for a few minutes after clearing snow and before storing so moving parts do not freeze.

MAINTAINING SNOWTHROWER

25. Perform only those maintenance instructions described in this manual. Shut engine off before performing any maintenance service or adjustment. Additionally, pull high tension wire off spark plug and keep wire away from plug to prevent possibility of accidental starting. If major repairs are ever needed, contact the local Authorized TORO Service Dealer for assistance.

26. Keep snowthrower in safe operating condition by keeping nuts, bolts and screws tight. Check engine mounting bolts frequently to assure they are tight.

27. Do not overspeed the engine by changing governor settings. Recommended maximum engine speed is 3400 rpm. To assure safety and accuracy, check maximum engine speed (3400 rpm) with a tachometer.

28. Allow engine to cool before storing snowthrower in an enclosure such as a garage or storage shed. Never store the machine with fuel in the fuel tank inside a building where open flame or sparks are present.

29. When storing the snowthrower for an extended time — off season storage or 30 days — drain gasoline from fuel tank to prevent a potential hazard. Store gasoline in a safety-approved, red, metal container. Remove key from ignition switch and keep it in a memorable place.

30. At the time of manufacture, the snowthrower conformed with or exceeded safety standards in effect for snowthrowers. Therefore, to assure optimum performance and safety, purchase genuine TORO replacement parts and accessories to keep the TORO all TORO. NEVER USE "WILL-FIT" REPLACEMENT PARTS AND ACCESSORIES. The TORO logo assures genuineness.

31. For safety reasons, use only those accessories and attachments recommended by The Toro Company to assure continued safety certification of the product. Using unapproved accessories and attachments could contribute to a potential hazard.

TABLE OF CONTENTS

	Page
Symbol Glossary	3
Loose Parts	4
Setting Up Instructions	5-7
Install Handle	5
Install Traction Rod	5
Install Auger Drive Control Linkage	5
Install Speed Selector Rod	6
Connect Ignition Wires	6
Install Chute Control	7
Secure Chute Deflector	7
Preparation Before Starting	8
Fill Crankcase With Oil	8
Fill Fuel Tank With Gasoline	8
Check Snowthrower Operation	8
Controls	9
Starting and Stopping Instructions	10
To Start Engine	10
Before Stopping Engine	10
To Stop Engine	10
Operating Instructions	10-11
Snowthrowing Tips	10-11
Maintenance	11-17
Draining Gasoline	11
Lubricating Snowthrower	11
Changing Crankcase Oil	12
Auger Gear Box	12
Adjusting Skids and Scraper Blade	12-13
Adjusting Auger Control If Unit Will Not Throw Snow	13
Replacing Auger/Impeller Drive Belt	13-14
Replacing Traction Drive Belt	14
Adjusting Traction Disc	14-15
Adjusting Speed Selector	15
Replacing Spark Plug	16
Adjusting Carburetor	16-17
Preparing Snowthrower For Storage	17
Identification and Ordering	17
Maintenance Record	18-19

SYMBOL GLOSSARY



Safety alert



Keep hands away



Shut off engine before unclogging discharge chute



Avoid injury from rotating auger. Keep hands, feet and clothing away.



Read and understand operator's manual



Primer pump



Engine speed (Throttle)

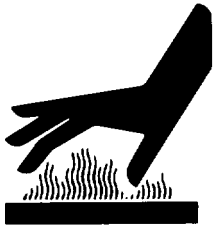

Hot Surface



Slow



Fast



Choke on

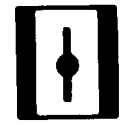

Choke Off

LOOSE PARTS

Part	Qty.	Use
Cotter Pin	1	Install on Speed Selector Rod
Flat Washer	1	
Capscrews & Pyramidal Washers	4	Install Handle
Clevis Pin	1	Install Auger & Traction Drive Control Rod
Cotter Pin	1	
Flange Nut	2	
Capscrew & Locknut	1	Install Chute Control Rod
Locknut & Pyramidal Washer	1	
Special Hex Flange Screw	1	Connect Wires
Carriage Bolt	1	Secure Chute Deflector
Rubber Washer	1	
Friction Plate	1	
Flat Washer	1	
Belleville Washer	1	
Locknut	1	
Keys	2	Use in ignition switch
Registration Card	2	Used to validate product warranty

Specifications and design subject to change without notice.

Accessories:

110 VAC Electric Starter (part no. 23-3790)
Tire Chains (part no. 37-7010)
Light Kit (part no. 54-9821)
Drift Breaker Kit (part no. 37-7020)
Grader Blade (model no. 59099)

SETTING UP INSTRUCTIONS

Note: Left and right sides of snowthrower are determined by standing in the normal operating position.

INSTALL HANDLE

1. Remove tie straps securing control rods to handle.

2. Position left handle on side of unit, align handle mount holes with holes in side plate, and secure with two capscrews and pyramidal washers until finger tight (Fig. 1). Repeat procedure on right side. Make sure handles are at same height (parallel) before tightening handle screws in both sides of unit.

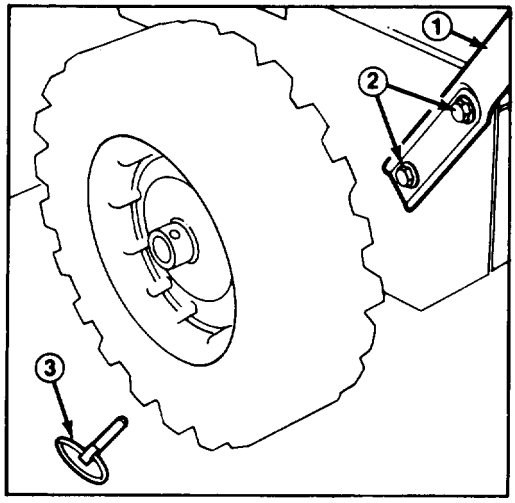

Figure 1

1. Handle 2. Capscrews and curved washers 3. Wheel retainer

INSTALL TRACTION ROD

1. Thread a flange nut (flange side down) onto traction rod located on left handle (Fig. 2).

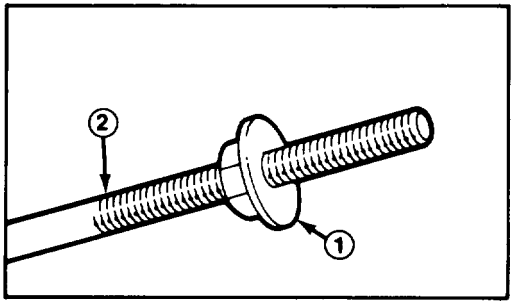

Figure 2

1. Flange nut 2. Traction rod

2. Insert traction rod through loop in lower traction rod (Fig. 3).

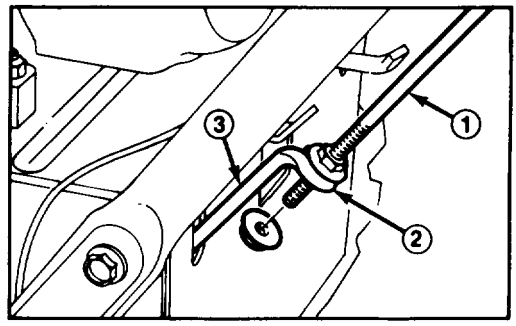

Figure 3

1. Traction rod 2. Loop 3. Lower traction rod

3. Thread a flange nut (flange side up) onto bottom of traction control rod to loop in lower traction rod (Fig. 3).

4. Move speed selector into first gear.

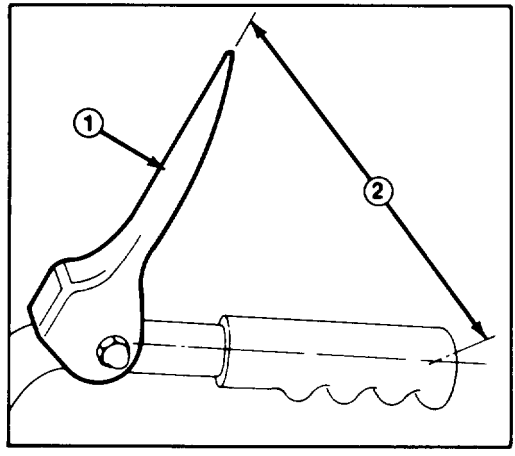

Figure 4

1. Traction control lever
2. Approximately 4½ inches (11.5 cm)

5. Slowly pull machine backward while slowly depressing traction control lever toward handle. Adjustment is correct when wheels stop turning and the distance between the top of the traction control lever and the center of the handle is 4½ inches (11.5 cm) (Fig. 4).

6. Adjust flange nuts on traction rod (Fig. 3) until dimension is attained.

INSTALL AUGER DRIVE CONTROL LINKAGE

1. Loosen jam nut above clevis on upper control rod (Fig. 5).

SETTING UP INSTRUCTIONS

2. Align holes in clevis and lower control rod, install with clevis pin (Fig. 5).

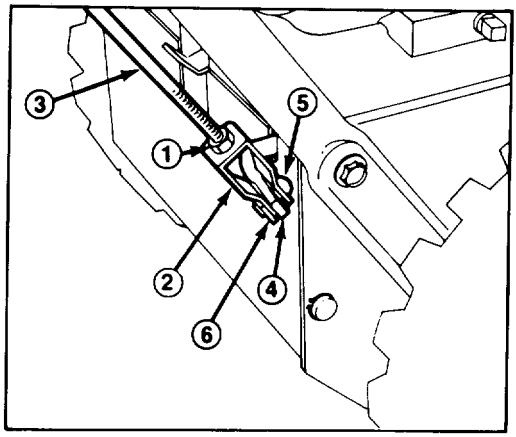

Figure 5

1. *Jam nut*
2. *Clevis*
3. *Upper control rod*
4. *Lower control rod*
5. *Clevis pin*
6. *Cotter pin*

3. Check the distance between the center of the handle and tip of the auger control lever (Fig. 6). Distance should be approximately 5 inches (12.7 cm).

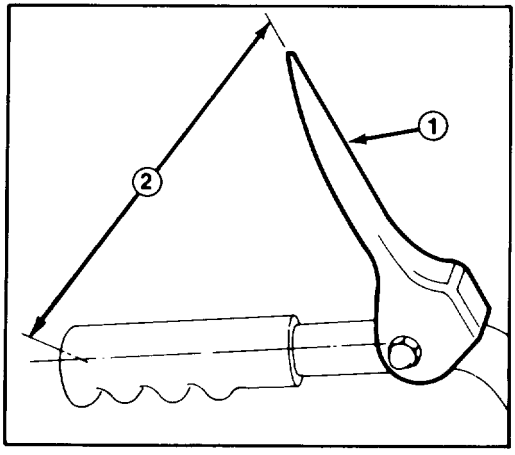

Figure 6

1. *Auger control lever*
2. *Approximately 5 inches (12.7 cm)*

4. To adjust distance, remove clevis pin, loosen jam nut and thread clevis up or down to increase or decrease distance between handle and control lever.

5. After adjusted, install clevis pin and secure with cotter pin. Tighten jam nut to secure clevis (Fig. 5).

6. Compress lever against handle grip to check lever operation. If lever is difficult to compress or does not touch handle, shorten distance between center of handle and tip of lever; repeat steps 4 and 5.

INSTALL SPEED SELECTOR ROD

1. Pull speed selector arm to the fully "out" position (Fig. 7) and move control handle on escutcheon plate to the R (REVERSE) position to ease assembly.

2. Install speed selector rod into selector arm, add one flat washer on the selector rod and secure with cotter pin (Fig. 7).

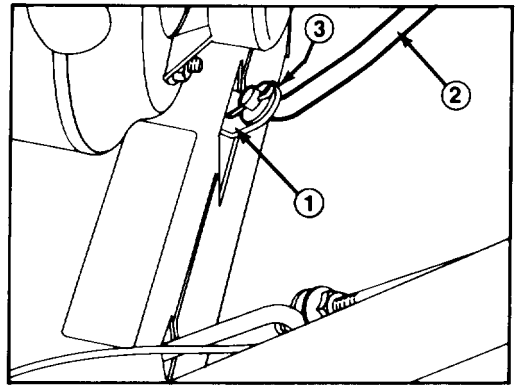

Figure 7

1. *Speed selector arm*
2. *Speed selector rod*
3. *Flat washer and cotter pin*

Note: If speed selector lever will not move into third gear, an adjustment is necessary: refer to Adjusting Speed Selector, page 15.

CONNECT IGNITION WIRES

1. Remove phillips head screw and wire from engine bracket, install wire with smaller I.D. hole and reassemble to engine bracket (Fig. 8).

2. Insert flange head capscrew through large I.D. hole in remaining wire and install in lower hole in engine bracket (Fig. 8).

SETTING UP INSTRUCTIONS

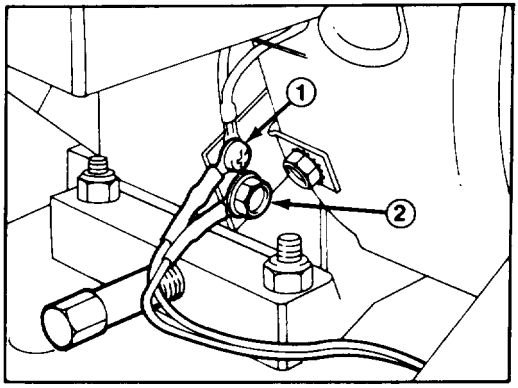

Figure 8

1. *Small I.D. wire and phillips head screw*
2. *Flange head capscrew and large I.D. wire*

INSTALL CHUTE CONTROL

1. Assemble chute control bracket and rod to left side of handle with capscrew and locknut. Leave locknut loose until assembly is completely mounted (Fig. 9).

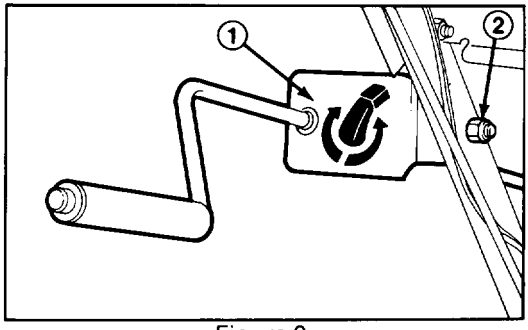

Figure 9

1. *Chute control bracket and rod*
2. *Capscrew and locknut*

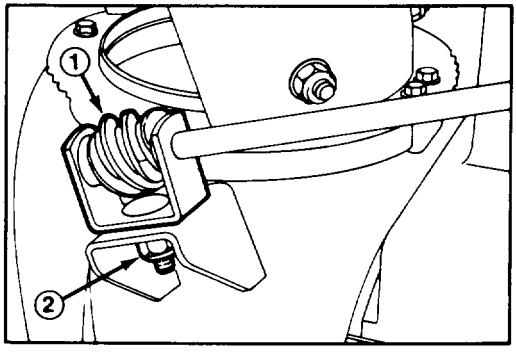

Figure 10

1. *Worm gear and bracket*
2. *Pyramidal washer and locknut*

2. Apply No. 2 general purpose grease to worm gear. Mount worm gear and bracket to mounting flange and secure with pyramidal washer and locknut (Fig. 10).

3. Slide worm gear into teeth of chute retaining ring and tighten locknut (Fig. 10). Then, tighten locknut to secure chute control bracket against left handle (Fig. 9).

SECURE CHUTE DEFLECTOR

1. Pivot deflector upward and back until deflector stop passes over lip on top of chute.

2. Secure left side of deflector to discharge chute using carriage bolt, rubber washer, friction plate, flat washer and locknut. Make sure rubber washer and friction plate are positioned between chute and deflector and friction plate tabs fit into holes in deflector. See Figure 11 for proper installation sequence of parts.

3. Tighten nuts on both sides of deflector. Do not over tighten nuts so excessive force is required to operate deflector.

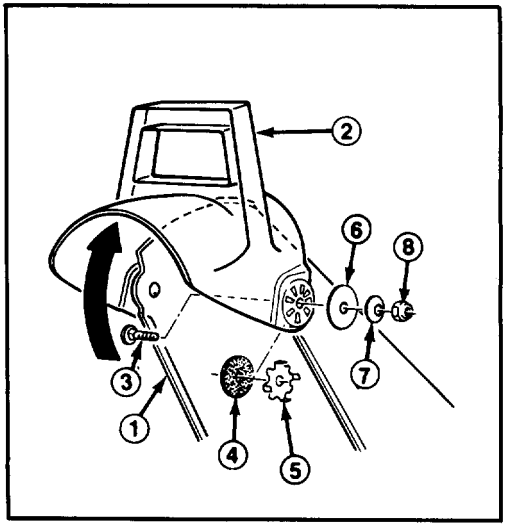

Figure 11

1. *Chute*
2. *Deflector*
3. *Carriage bolt*
4. *Rubber washer*
5. *Friction plate*
6. *Flat washer*
7. *Belleville washer*
8. *Locknut*

PREPARATION BEFORE STARTING

FILL CRANKCASE WITH OIL

The engine is shipped from the factory without oil in the crankcase. Therefore, before trying to start engine, oil must be added to the crankcase.

IMPORTANT: Check level of oil every 5 operating hours or each time unit is used. Initially, change oil after the first 2 hours of operation; thereafter, under normal conditions, change oil after every 25 hours of operation. However, change oil more frequently when engine is operated in extremely dirty conditions.

1. Move unit to a level surface to assure an accurate oil level reading.
2. Clean area around dipstick to prevent foreign matter from entering filler hole when dipstick is removed.
3. Remove dipstick from crankcase (Fig. 12).

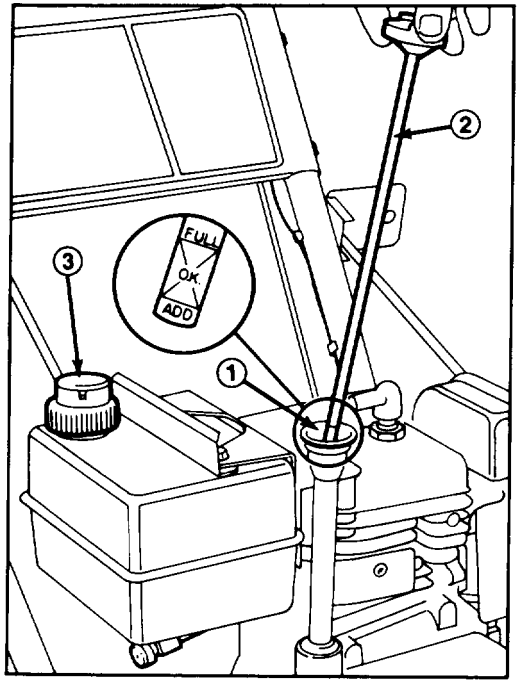

Figure 12

1. *Filler hole*
2. *Dipstick*
3. *Fuel Tank Cap*

4. Slowly, pour 21 ounces (0.621 l) of SAE 5W30 or SAE 10 oil into the filler hole (Fig. 12). The engine uses only high-quality detergent oil having the American Petroleum Institute —API — "service classification" SC, SD or SE.

Note: Dipstick must be fully installed to assure accurate gauging of oil level. DO NOT OVERFILL. POUR OIL SLOWLY.

FILL FUEL TANK WITH GASOLINE

THE TORO COMPANY STRONGLY RECOMMENDS THE USE OF CLEAN, FRESH **UNLEADED** REGULAR GASOLINE IN TORO GASOLINE POWERED PRODUCTS. UNLEADED GASOLINE BURNS CLEANER, EXTENDS ENGINE LIFE, AND PROMOTES GOOD STARTING BY REDUCING THE BUILD-UP OF COMBUSTION CHAMBER DEPOSITS. LEADED GASOLINE CAN BE USED IF UNLEADED IS NOT AVAILABLE.

NOTE: NEVER USE METHANOL, GASOLINE CONTAINING METHANOL, GASOHOL CONTAINING MORE THAN 10% ETHANOL, PREMIUM GASOLINE, OR WHITE GAS BECAUSE ENGINE FUEL SYSTEM DAMAGE COULD RESULT.

DO NOT USE FUEL ADDITIVES OTHER THAN THOSE MANUFACTURED FOR FUEL STABILIZATION DURING STORAGE (SUCH AS TORO'S PRESERVIT OR A SIMILAR PRODUCT). ADDITIVES SHOULD NOT BE USED TO TRY TO ENHANCE THE POWER OR PERFORMANCE OF MACHINE.

1. Clean area around the fuel tank cap. Remove cap from fuel tank and fill tank to within 1/2 inch (13 mm) from the top with gasoline. Reinstall tank cap (Fig. 12).

⚠ DANGER

Gasoline is extremely flammable and explosive under certain conditions. Do not smoke when handling fuel and keep fuel far away from open flames and sparks. Never buy more than a 30 day supply of gasoline. Store gasoline in an approved container and keep it out of the reach of children.

Refuel outdoors, only when engine is cold. Fill tank to within 1/2" (13 mm) from its top. This space is for expansion of fuel. Use funnel or spout to prevent spilling. Wipe up any spilled gas.

CHECK SNOWTHROWER OPERATION

Check snowthrower operation before using it to blow snow. Familiarize yourself with the controls and starting and stopping procedures: refer to Controls, page 9 and Starting and Stopping instructions, page 10. If any malfunction is noted, review Set-Up Instructions and check snowthrower again.

CONTROLS

Auger Drive Control (Fig. 13) — Control has two positions: ENGAGE and DISENGAGE. To engage auger and impeller, compress lever against right handle grip. To disengage, release lever.

Traction Control (Fig. 13) — To achieve traction, lever must be compressed against left handle grip. To stop traction, release lever.

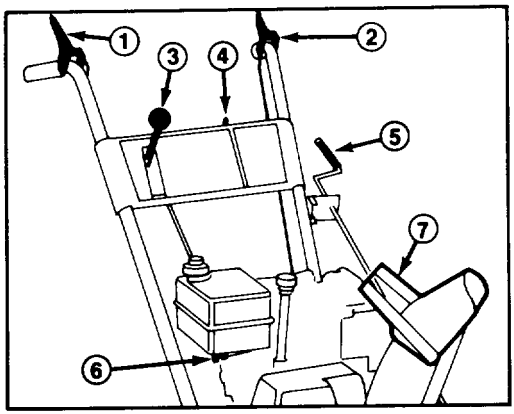

Figure 13

1. *Auger drive control*
2. *Traction control*
3. *Speed selector*
4. *Ignition switch*
5. *Discharge chute control*
6. *Fuel shut-off valve*
7. *Chute deflector handle*

Speed Selector (Fig. 13) — The control has four positions: reverse, 1, 2 and 3. To change speeds, move gear shift to position desired. Lever will lock in notch at each speed selection. Use positions 1, 2, and 3 depending on snow conditions.

Ignition Switch (Fig. 13) — Switch has two positions: ON and OFF. Rotate key to ON before starting engine with the recoil starter. To stop engine, rotate key to OFF.

Throttle (Fig. 14) — Moving the throttle upward increases engine speed.

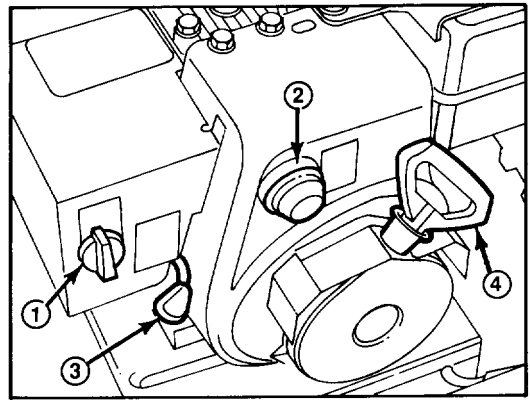

Figure 14

1. *Choke*
2. *Primer*
3. *Throttle*
4. *Recoil starter*

Choke (Fig. 14) — Choke for engine is located on heater box. Rotate choke to FULL choke position to start a cold engine. As engine warms up, move choke gradually to OFF.

Primer (Fig. 14) — Press primer to pump small amount of gasoline into engine for improved cold weather starting.

Fuel Shut-Off Valve (Fig. 13) — Valve is located under fuel tank. Close valve to stop fuel flow from fuel tank and open valve to allow fuel to flow to the carburetor. Close valve when snowthrower is not used.

Discharge Chute Control (Fig. 13) — Rotate discharge chute control clockwise to move discharge chute to the left and counterclockwise to move chute to the right.

Recoil Starter (Fig. 14) — Recoil starter is on back side of engine. Pull recoil starter to start engine.

Chute Deflector Handle (Fig. 13) — Deflector handle is on top of discharge chute, and it is used to control height of the snow stream.

STARTING AND STOPPING INSTRUCTIONS

TO START ENGINE:

Note: If engine is operated when temperature is +40° F (4° C) or higher, remove carburetor heater box (Fig. 15). However, the heater box must be reinstalled when temperature falls below +40° F (4° C). To remove heater box:

A. Remove phillips screws and hex head screw securing heater box in place. Pull choke knob off choke rod (Fig. 15).

B. Lift heater box up and away from the engine, and reinstall choke knob on mounting pin.

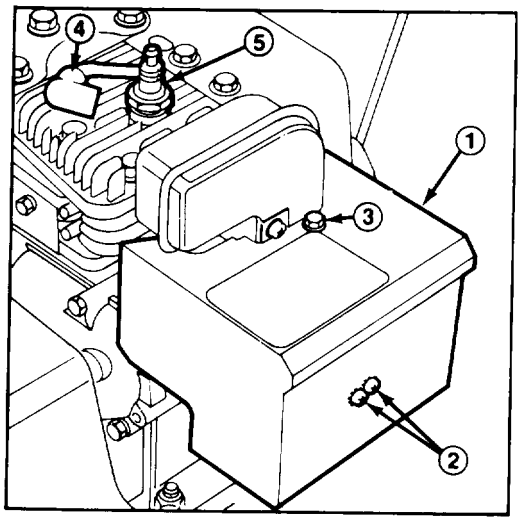

Figure 15

1. Heater box
2. Phillips screws
3. Hex head screw
4. High tension wire
5. Spark plug

IMPORTANT: Check auger and impeller to assure that both parts are not frozen solid, but free to rotate. Also, make sure discharge chute is not obstructed.

1. Push high tension wire onto spark plug (Fig. 15).

2. Move throttle to FAST (Fig. 14).

3. Open fuel shut-off valve below fuel tank (Fig. 13).

4. Rotate choke to full choke position (Fig. 14).

5. Rotate ignition key to ON (Fig. 13).

6. Depress primer (Fig. 14) five times.

7. Grasp recoil starter handle (Fig. 14) and pull it out slowly until positive engagement results; then pull vigorously to start the engine. Keep firm grip on starter handle and return the rope slowly.

Note: If engine does not start or if temperature is -10° F (-23° C) or below, additional priming will usually be required.

8. After engine starts, immediately rotate choke (Fig. 14) to 3/4 position. As engine warms up, rotate choke to 1/2 position; then to OFF position. If engine falters, return choke to 1/2 position. When engine warms sufficiently, rotate choke to OFF position.

BEFORE STOPPING ENGINE

1. Run engine for a few minutes to help dry off any moisture which may have accumulated on engine.

2. With engine running, pull recoil starter with a rapid continuous full arm stroke (3) three or (4) four times. This will help prevent possible freeze-up of recoil starter due to extreme snow blowing conditions.

Note: Pulling of recoil starter rope will produce a loud clattering sound. This is not harmful to the engine or the starter.

TO STOP ENGINE:

1. Release traction and auger drive control (Fig. 13).

2. Move throttle to slow and rotate ignition key to OFF (Fig. 14).

OPERATING INSTRUCTIONS

SNOWTHROWING TIPS

1. When snowthrower is not being used, close fuel shut-off valve, and remove key from the switch.

2. Remove snow as soon as possible after it falls. This will produce best snow removal results.

3. If snow will be removed from crushed rock or gravel areas, adjust skids so bottom of auger housing clears the rocks: refer to Adjusting Skids, page 12.

4. For concrete or asphalt surfaces, adjust skids so there is 1/8 inch (3.2 mm) between bottom of auger and concrete or asphalt surface.

5. The snowthrower is designed to clean most of the snow down to the contact surface, but there are times when front of snowthrower may tend to ride up. If this happens, reduce forward speed by shifting into a lower gear. If front still tends to ride up, lift up on both handles to hold down front of snowthrower.

OPERATING INSTRUCTIONS

6. Discharge snow downwind whenever possible, and overlap each swath to assure complete snow removal. If wheels slip, shift into a lower gear which reduces forward speed.

7. Normally, chains are not required; however, tire chains are recommended when the wheels spin excessively.

8. In some snow and cold weather conditions, some controls and moving parts may freeze solid. Therefore, when any control becomes hard to operate, stop the engine; then check all parts for freeze up. DO NOT USE EXCESSIVE FORCE AND TRY TO OPERATE THE CONTROLS WHEN FROZEN. Free all controls and moving parts before operating.

MAINTENANCE

CAUTION

To prevent accidental starting of the engine while performing maintenance, rotate ignition key to off and remove it from the switch. Next, pull high tension wire off spark plug (Fig. 15) and make sure wire does not accidentally touch the plug.

DRAINING GASOLINE

1. Close fuel shut-off valve located under engine.

2. Place a clean drain pan under shut-off valve.

3. Loosen hose clamp securing fuel line to valve and slide line off valve.

CAUTION

Since gasoline is highly flammable, drain it outdoors and make sure engine is cool to prevent a potential fire hazard. Wipe up any gasoline that may have spilled. Do not drain gasoline near any open flame or where gasoline fumes may be ignited by a spark. Do not smoke a cigar, cigarette, or a pipe when handling gasoline.

4. Open valve allowing fuel to flow into drain pan.

5. Reinstall fuel line and secure with hose clamp.

LUBRICATING SNOWTHROWER

Lubricate the moving parts of the snowthrower after every 15 hours of operation

1. Drain gasoline from fuel tank.

2. Tip snowthrower onto auger housing and block it so it cannot fall. Now remove four thread forming screws holding bottom cover in place, and slide shield away from unit (Fig. 16).

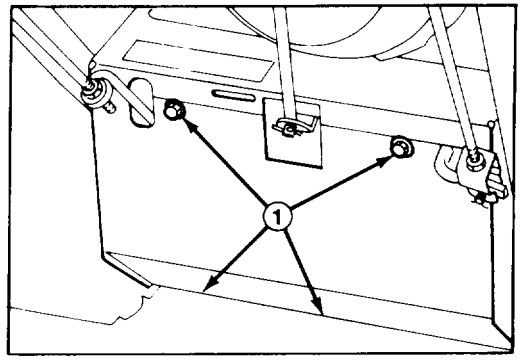

Figure 16

1. Thread forming screws

3. Lightly lubricate points shown with SAE 10W-40 oil or grease (Fig. 17). Wipe up any excess oil or grease.

4. Install bottom cover with four thread forming screws.

IMPORTANT: Do not get oil or grease on rubber wheel or friction drive plate because the wheel will slip and rubber may deteriorate.

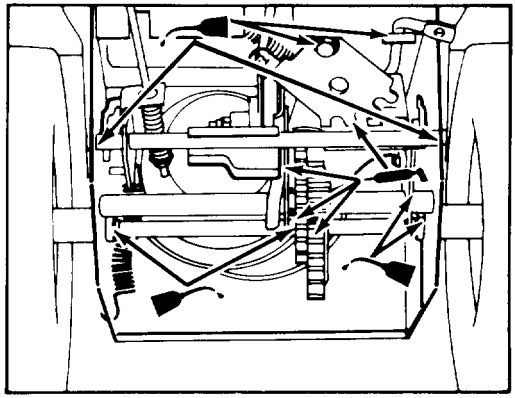

Figure 17

MAINTENANCE

CHANGING CRANKCASE OIL

Initially, change oil after the first 2 hours of engine operation; thereafter, change oil after every 25 hours of engine operation or annually. If possible, run engine just before changing oil because warm oil flows better and carries more contaminants than cold oil.

Note: Drain oil when fuel tank is empty to prevent spilling gasoline.

1. Pull high tension wire off spark plug and make sure wire does not contact plug accidentally (Fig. 15).

2. Put a two inch block under the right wheel so snowthrower is tipped slightly to the side. This will assure that all oil drains from crankcase.

3. Clean area around oil drain cap. Next, slide oil drain pan below drain extension; then remove oil drain cap (Fig. 18).

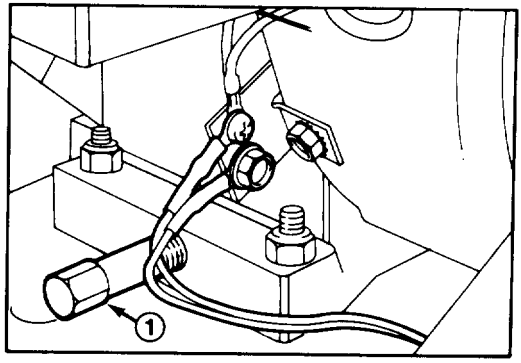

Figure 18

1. Oil drain cap

4. After all oil is drained, install oil drain cap. Also, REMOVE BLOCK FROM UNDER RIGHT WHEEL.

5. Position snowthrower on a level surface. Next, fill crankcase with oil: use Fill Crankcase With Oil, page 8. Wipe up any oil that may have spilled.

AUGER GEAR BOX

The auger gear box is filled with grease at the factory so regular maintenance is not required. However, if grease must be replaced in gear box:

1. Remove pipe plug (Fig. 19).

2. Fill gear box with a low temperature-high pressure grease such as Lubriplate Mag-1. Capacity 4 oz.

3. Reinstall pipe plug.

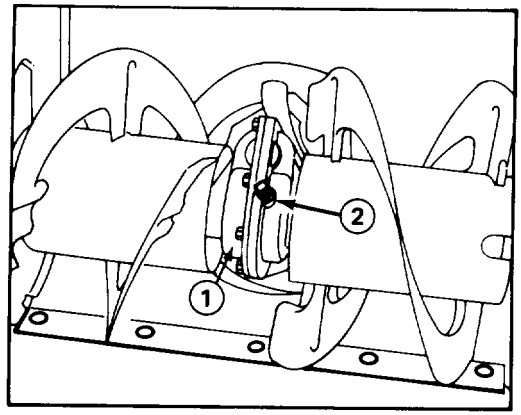

Figure 19

1. Gear box
2. Pipe plug

ADJUSTING SKIDS AND SCRAPER BLADE

When snowthrower will be used on concrete or asphalt surfaces, adjust skids using steps 1 and 2. However, use only step 3 when snowthrower will be used on gravel or crushed rock surfaces.

1. Move snowthrower to a level surface. Next, loosen four flange nuts (Fig. 20) securing both skids to auger side plates. Skids must slide up and down.

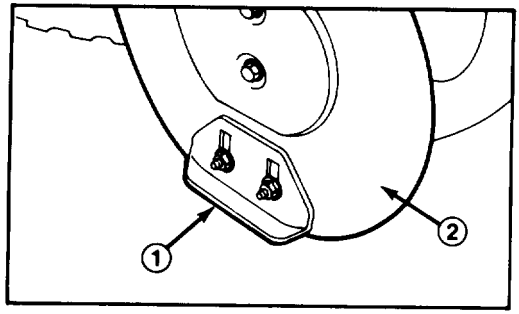

Figure 20

1. Skid
2. Auger housing

2. Adjust both skids so there is 1/8 of an inch (3 mm) between bottom of auger and level surface. When skids are adjusted correctly, tighten flange nuts. Next, check scraper blade that is mounted at bottom of auger housing (Fig. 21). To adjust scraper, loosen five mounting screws, level scraper, and retighten screws. Scraper must be parallel with level surface.

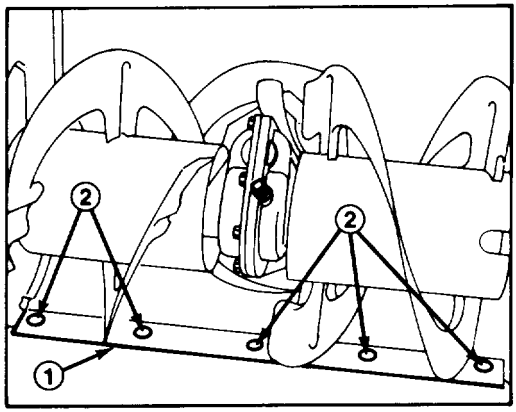

Figure 21

1. Scraper
2. Mounting screws

Note: Do not use step 3 if unit is to be used on smooth or hard surfaces.

3. Loosen four flange nuts (Fig. 20) securing both skids to auger side plates. Next, slide skids down as far as possible so auger is as far from level surface as skid adjustment allows; then tighten flange nuts.

Note: If bottom scraper is excessively worn, replace it.

ADJUSTING AUGER CONTROL IF UNIT WILL NOT THROW SNOW

1. Measure the distance between the center of handle and the tip of the auger control lever.
2. Remove cotter pin and clevis pin securing clevis to lower control rod (Fig. 22).
3. Loosen jam nut and rotate clevis clockwise to increase dimension measured by 1/4 inch.
4. Reinstall clevis pin, cotter pin and tighten jam nut.
5. Check unit performance and repeat Steps 1 thru 4 as required.

Note: Do not increase dimension more than necessary for satisfactory performance.

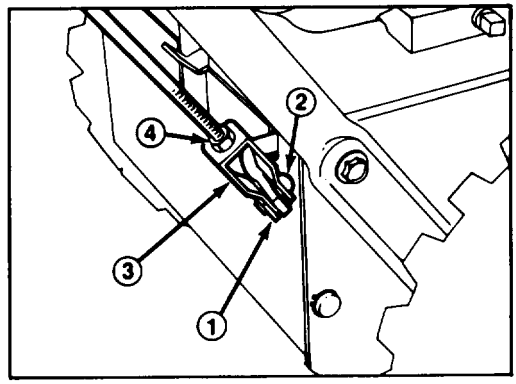

Figure 22

1. Cotter pin 3. Clevis
2. Clevis pin 4. Jam nut

REPLACING AUGER/IMPELLER DRIVE BELT

When auger/impeller drive belt (Fig. 24) becomes worn, stretched, oil-soaked, or otherwise defective, belt replacement is required.

1. Pull high tension wire off spark plug and make sure it does not contact the plug accidentally.
2. Remove two thread forming screws holding belt cover in place, and set belt cover aside (Fig. 23).

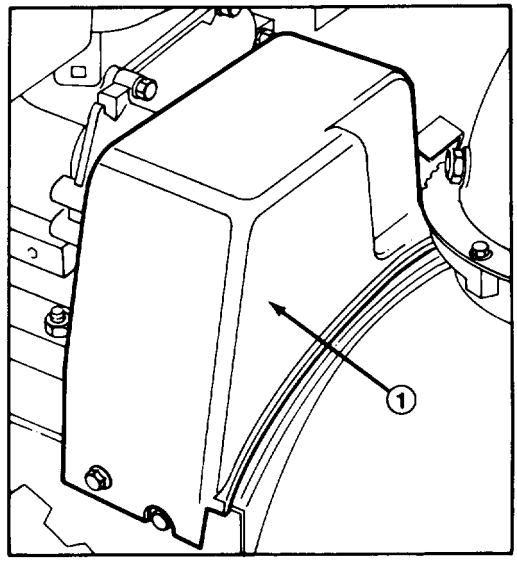

Figure 23

1. Belt cover

3. Remove auger drive belt from engine pulley and large auger/impeller pulley (Fig. 23).

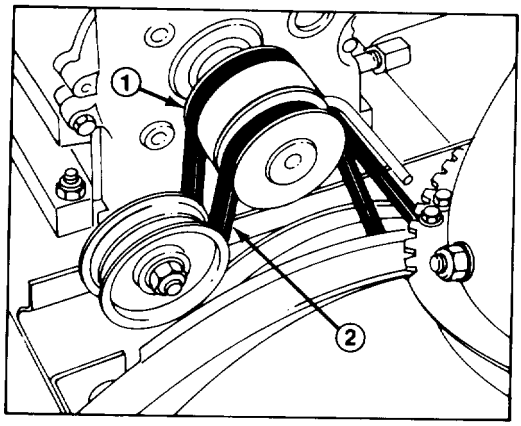

Figure 24

1. Traction drive belt
2. Auger/impeller drive belt

4. Install new belt around large auger/impeller pulley (Fig. 24). Next, loop belt over engine pulley, making sure that belt is on inside of idler pulley and wire belt guide (Fig. 24).

5. Install belt cover with two thread forming screws.

REPLACING TRACTION DRIVE BELT

When traction belt becomes worn, stretched, oil-soaked, or otherwise defective, belt replacement is required.

1. Pull high tension wire off spark plug and make sure it does not contact the plug accidentally. Drain gasoline from fuel tank.

2. Remove two thread forming screws holding belt cover in place, and set belt cover aside. (Fig. 23).

3. Remove auger/impeller drive belt: refer to Replacing Auger/Impeller Drive Belt, page 13.

4. Tip snowthrower onto auger housing and block it so it cannot fall. Remove rear shield and disconnect spring from side plate (Fig. 25).

⚠ CAUTION

Spring is under heavy tension. Use caution when removing.

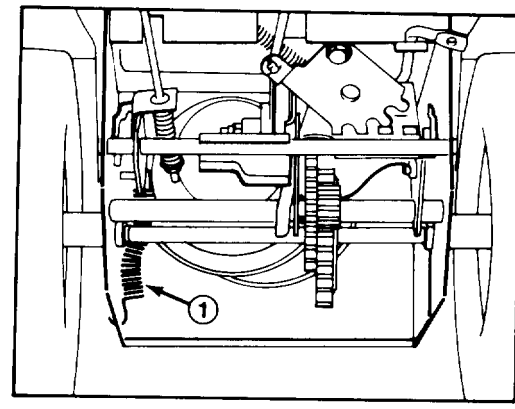

Figure 25

1. Spring

5. Set unit upright and remove traction drive belt from engine pulley and large traction pulley (Fig. 24).

6. Install new belt around large traction pulley (Fig. 24). Next, loop belt over engine pulley, making sure that belt is on inside of traction idler pulley and wire belt guide (Fig. 24). Tip snowthrower onto auger housing, block it and hook spring onto side plate (Fig. 25). Replace rear shield and set unit upright.

7. Replace auger/impeller drive belt: refer to Replacing Auger/Impeller Drive Belt, item 4-5.

ADJUSTING TRACTION DISC

If snowthrower does not drive in reverse or forward speeds, an adjustment is required.

1. Loosen locknuts securing upper traction control rod to lower traction control rod (Fig. 26).

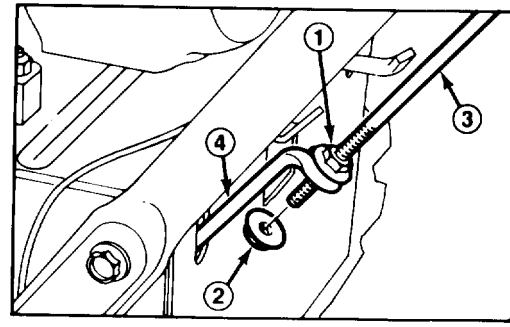

Figure 26

1. Upper locknut
2. Lower locknut
3. Upper traction control rod
4. Lower traction control rod

2. Adjust upper locknut (Fig. 26) until there is approximately 5 inches (12.7cm) between the center of the handle and the tip of the traction control lever (Fig. 27).

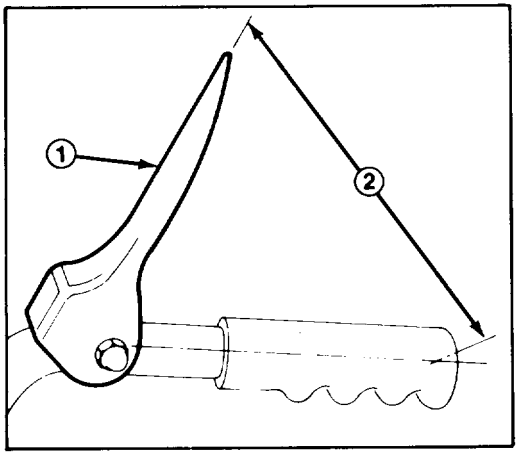

Figure 27

1. Traction control lever
2. Approximately 5 inches (12.7 cm)

3. Test run unit to check adjustment. (Wheels should spin when holding handles.) Repeat adjustment, if necessary, in 1/2 inch (13 mm) increments.

ADJUSTING SPEED SELECTOR

If there is slow or no ground speed in No. 1 speed selection, or speed selector cannot be moved into No. 3 speed selection, an adjustment of the speed selector linkage is required.

1. Remove four thread forming screws securing bottom cover to frame. Remove bottom cover (Fig. 28).

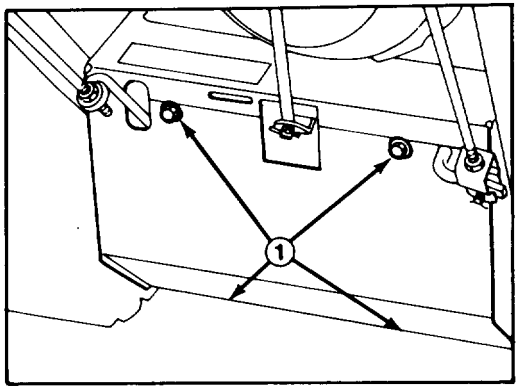

Figure 28

1. Four thread forming screws

2. Loosen flange nuts securing selector plate to escutcheon plate. This allows selector plate to move freely for adjustment (Fig. 29).

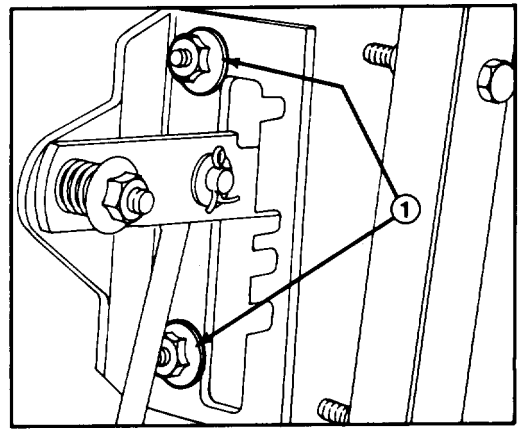

Figure 29

1. Speed selector plate flange nuts

3. Shift speed selector to third gear and push down on speed selector plate to move drive assembly to the right. Drive assembly should contact roll pin; if not, push to the right to make a contact (Fig. 30).

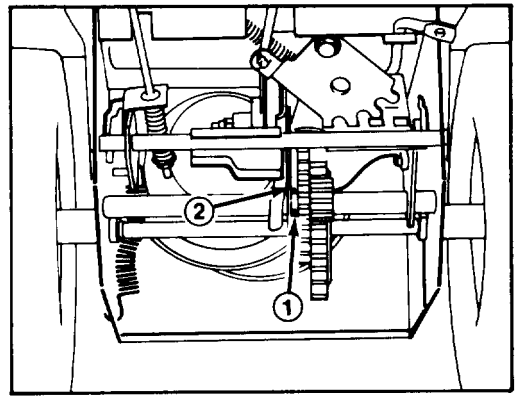

Figure 30

1. Roll pin 2. Drive assembly

4. With drive assembly in the farthest right position contacting roll pin, tighten flange nuts securing speed selector plate.

5. Shift speed selector to R (REVERSE) and back to third to check adjustment. If space between roll pin and drive assembly is more than 1/16 of an inch (1.6 mm), repeat steps 2, 3 and 4.

6. Reassemble bottom cover.

MAINTENANCE

REPLACING SPARK PLUG

Correct spark plug to use is a Champion RJ-17LM or Autolite AR7N, and correct air gap is 0.030 of an inch (0.76 mm). Since air gap between center and side electrodes of the spark plug increases gradually during normal engine operation, install a new plug after every 25 hours of engine operation.

1. Clean area around spark plug so foreign matter cannot fall into cylinder when plug is removed.

2. Pull high tension wire off spark plug and remove plug from cylinder head.

IMPORTANT: A cracked, fouled, or dirty spark plug must be replaced. Do not sand blast, scrape, or clean electrodes, because grit may eventually release from the plug and fall into the cylinder. The result will likely be engine damage.

3. Set air gap between electrodes of new spark plug at 0.030 of an inch (0.76 mm), (Fig. 31). Next, install spark plug in cylinder head. Tighten plug to 15 ft-lb (20.4 N·m). If torque wrench is not used, tighten plug firmly.

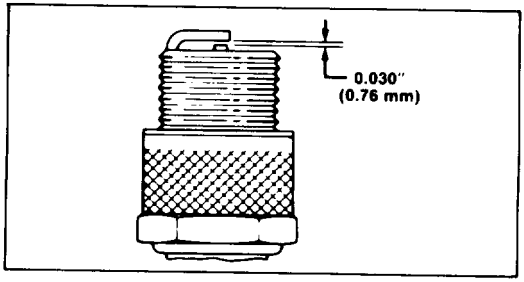

Figure 31

4. Push the high tension wire onto spark plug.

ADJUSTING CARBURETOR

The carburetor has been adjusted at the factory, but an occasional adjustment may be required. However, do not make unnecessary carburetor adjustments because factory settings are usually satisfactory.

1. Remove carburetor heater box; use Starting and Stopping Instructions, paragraph one, steps A & B, page 10.

IMPORTANT: Do not close power adjusting screw too tight because the screw and seat will likely be damaged.

2. Power adjusting screw (Fig. 32) — Close screw by gently rotating it clockwise until a slight seating resistance is felt. Next, rotate power adjusting screw 1 full turn — 360° — counterclockwise.

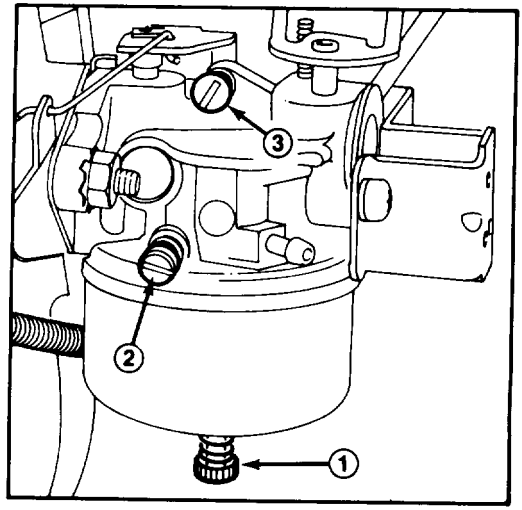

Figure 32

1. *Power adjusting screw*
2. *Idle mixture screw*
3. *Idler speed screw*

IMPORTANT: Do not close idle mixture screw too tight because the screw and seat will likely be damaged.

3. Idle mixture screw (Fig. 32) — Close screw by gently rotating it clockwise until a slight seating resistance is felt. Next, rotate idle mixture screw 1½ full turns counterclockwise.

Note: The settings for the power adjusting screw and the idle mixture screw are approximate; however, these settings will allow engine to be started so carburetor can be fine tuned — steps 4-7.

4. Start engine and let it warm up for approximately 3 to 5 minutes; then move throttle to FAST.

⚠ CAUTION

Engine must be running so final adjustment of the carburetor can be performed. To guard against possible personal injury, stay clear of auger drive and wheel drive controls, and remember to keep hands, feet, face, and other parts of the body away from muffler, auger, discharge chute, and any moving part(s).

MAINTENANCE

5. Rotate power adjusting screw (Fig. 32) clockwise — in — 1/8 turn at a time until engine misses because of a lean gasoline mixture. Then rotate screw counterclockwise — out — 1/8 turn at a time until engine runs unevenly because of a rich gasoline mixture. Next, rotate power adjusting screw clockwise, back to the midpoint between the rich and lean setting so engine runs smoothly.

Note: Wait several seconds between each 1/8 turn setting so engine can adjust to the new fuel mixture.

6. Move throttle to idle speed. Next, rotate idle speed screw (Fig. 32) until engine idles fast —1750 rpm.

7. Rotate idle mixture screw (Fig. 32) clockwise — in — 1/8 turn at a time until engine begins to miss because of a lean mixture. Then rotate screw counterclockwise — out — 1/8 turn at a time until engine runs unevenly because of rich mixture. Next, rotate idle mixture screw clockwise, back to the midpoint between rich and lean setting.

Note: Wait several seconds between each 1/8 turn setting so engine can adjust to the new fuel mixture.

8. Again, rotate idle speed screw (Fig. 32) until engine idles at 1750 rpm.

9. Check carburetor adjustment by quickly moving throttle from low speed to high speed. Engine should accelerate without hesitation or sputtering. If engine does not accelerate properly, adjust carburetor to a slightly richer mixture. Also, if engine falters under load, open power adjusting screw 1/8 turn counterclockwise.

10. After carburetor is adjusted, shut engine off. Reinstall carburetor heater box.

PREPARING SNOWTHROWER FOR STORAGE

1. Drain gasoline from fuel tank, refer to Draining Gasoline, page 11. Wipe up any gasoline that may have spilled.

2. Start the engine and let it run until it stops because there is no gasoline in the fuel system. When engine sputters, push choke down so fuel in carburetor is expended.

3. Remove spark plug from cylinder head. Next, pour two teaspoons of SAE 30 engine oil into spark plug hole in cylinder head. Install spark plug in cylinder head, but do not install high tension wire on the plug. Then pull recoil starter slowly to distribute oil on inside of cylinder.

4. Lubricate the snowthrower: refer to Lubricating Snowthrower, page 11. Change crankcase oil: refer to Changing Crankcase Oil, page 12.

5. Clean the snowthrower. Touch up chipped surfaces with paint. Sand affected areas before painting, and use a rust preventative to prevent metal parts from rusting.

6. Tighten all screws and nuts. If any part is damaged, repair or replace it.

7. Store snowthrower in a clean, dry place, and cover it to give protection.

8. If snowthrower is equipped with the optional, drift breaker storage bar, the snowthrower may be stored in upright position. Make sure to drain gas before tipping snowthrower upright on auger housing.

IDENTIFICATION AND ORDERING

MODEL AND SERIAL NUMBERS

The snowthrower has two identification numbers: a model number and a serial number. The two numbers are stamped on a decal which is located on rear housing between handles. In any correspondence concerning the snowthrower, supply model and serial numbers to assure that correct information and replacement parts are obtained.

To order replacement parts from an Authorized TORO Service Dealer, supply the following information:

1. Model and serial numbers of the snowthrower.

2. Part number, description, and quantity of part(s) desired.

Note: Do not order by reference number if a parts catalog is being used; use the PART NUMBER.

MAINTENANCE RECORD

Date	Hours Used	Oil Change	Lubrication	Summer Storage	Fall Service	Spark Plug Gap

MAINTENANCE RECORD

Date	Hours Used	Oil Change	Lubrication	Summer Storage	Fall Service	Spark Plug Gap


TORO®