FORM NO. 3320-551

TORO®

MODEL NO. 20563 - 0000001 & UP
MODEL NO. 20668 - 0000001 & UP

OPERATOR'S MANUAL

21" (0.53 M) REAR BAGGER

FINGERTIP START

⚠ SAFETY INSTRUCTIONS

BEFORE OPERATING

1. Read this manual carefully before operating the mower. Become familiar with the controls and proper use of the mower. Never allow children to operate the mower or adults to operate it without proper instructions.

2. Keep everyone, especially children and pets, away from area of operation. Thoroughly inspect area where mower will be used and remove sticks, stones, wire, and debris.

3. Wear long pants and substantial shoes. Do not operate mower while wearing open sandals or when barefoot.

4. Check fuel level before starting engine. Do not fill fuel tank indoors, when the engine is running or until engine cools for several minutes after running. Wipe up spilled gasoline before starting engine.

5. Keep all guards, shields, and safety devices in place. Repair or replace defective or damaged parts.

6. Engine, traction drive (model 20668 only) and blade are designed to stop when control bar is released. Assure control and brake function properly before each use of mower.

WHILE OPERATING

7. Do not run engine indoors.

8. Always maintain secure footing. Keep a firm grip on the handle and walk; never run. Never operate mower in wet grass. Mow only in daylight or in good artificial light.

9. Mow across the face of slopes; never up and down. Use extreme caution when changing direction on slopes. Do not mow excessively steep slopes.

10. Always wear safety glasses or eye shields during operation to protect eyes from foreign objects that may be thrown from the machine. Keep face, hands, and feet away from the mower housing and cutter blade when the engine is running. Stay behind the handle until the engine stops and keep clear of discharge opening at all times.

11. When bagging grass, stop engine and assure discharge door is closed before the bag is removed and emptied.

12. Shut engine off and wait for all moving parts to stop before unclogging discharge tunnel or removing grass-bag.

13. Since the blade rotates for a few seconds after the blade control is released, stay behind the handle until all moving parts stop.

14. After striking a foreign object or if mower vibrates abnormally, stop engine and remove wire from spark plug. Check mower for damage and make all repairs before using mower again.

15. Stop the engine before adjusting the height-of-cut.

16. Stop the engine when crossing a gravel driveway, road, or sidewalk.

17. Stop engine before leaving the operator's position—behind the handle. Disconnect wire from spark plug if mower will be unattended or not used.

18. Do not touch engine while it is running or shortly after it is stopped because engine will be hot enough to cause a burn.

©The Toro Company-1990

SAFETY INSTRUCTIONS

MAINTENANCE

19. Perform only those maintenance instructions described in this manual. If major repairs are ever needed or if assistance is desired, contact your local Authorized TORO Service Dealer.

20. Before mower is cleaned, inspected, serviced or adjusted, stop engine and disconnect wire from spark plug. Keep wire away from plug to prevent accidental starting.

21. To assure the mower is in safe operating condition, frequently check and keep all nuts, bolts, and screws tight. Assure blade bolt is tightened to 50 ft-lb.

22. To reduce fire hazard, keep engine free of excessive grease, grass, leaves, and accumulations of dirt.

23. Check grass catcher bag frequently for wear or deterioration. Replace with a new bag for your protection. Check that replacement bags comply with TORO's original recommendations or specifications.

24. Allow engine to cool before storing mower in any enclosure. Do not store mower near any open flame or where gasoline fumes may be ignited by a spark.

25. Do not overspeed the engine by changing governor settings.

26. At the time of manufacture, the mower conformed to the safety standards in effect for rotary mowers. To assure optimum performance and continued safety certification of the mower, use genuine TORO replacement parts and accessories. Replacement parts and accessories made by other manufacturers may result in non-conformance with the safety standards, and that could be dangerous.

SAFETY SYMBOL GLOSSARY


Safety alert


Keep hands and feet away from rotating blade


Place foot here when starting


Engine speed (Throttle)


Keep hands away


Keep all guards in place


Traction drive — ENGENGED (model 20668 only)


Traction drive — DISENGAGED (model 20668 only)



Keep bystanders from area being mowed


Fast


Slow



Never open chute door on mower when engine is running, unless grass bag or side discharge attachment is installed



Stop engine before leaving operator position


Read and understand operator's manual

TABLE OF CONTENTS

Page

Set-Up Instructions 3
Before Operating 4–5
Operating Instructions 5–8
Maintenance 8–14
- Servicing Air Cleaner 8–9
- Replacing Spark Plug 9
- Draining Gasoline 9
- Adjusting Throttle 9–10
- Changing Crankcase Oil 10
- Adjusting Wheel Drive 10–11
- Inspecting/Removing/Sharpening Blade 11–12
- Lubrication 12
- Adjusting Ground Speed Control For Neutral 12–13
- Adjusting Blade Brake 13
- Cleaning Mower Housing 13
- Preparing Mower For Storage 13–14

Product Identification 14
Toro Service Support 14
Optional Equipment 15
The Toro Promise

SET-UP INSTRUCTIONS

INSTALL HANDLE, STARTER ROPE, AND BAG

1. Align handles and tighten handle knobs (Fig. 1). Bend handle latches slightly toward each other (Fig. 1).

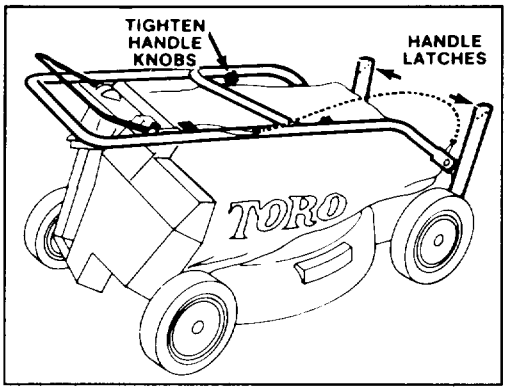

Figure 1

2. Pivot handle backward until handle stud snaps into center hole of handle latch (Fig. 2). If handle height is not satisfactory, adjust by placing handle stud into a different hole.

Assure control cables are to the rear and inside of handles.

3. Pull starter rope through rope guide on handle (Fig. 3). By squeezing control bar on handle, blade brake will release and allow rope to be pulled up easily to loop.

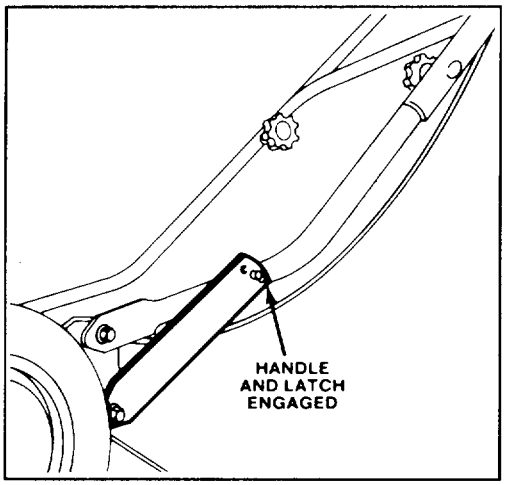

Figure 2

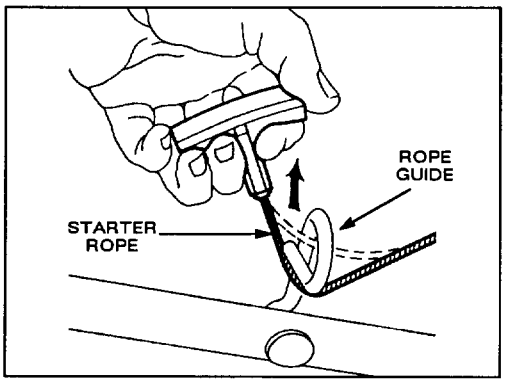

Figure 3

4. Install grass bag: refer to Using Grass Bag, page 6, steps 1–5.

BEFORE OPERATING

FILL CRANKCASE WITH OIL

Initially, crankcase must be filled with 20 ounces (0.621 L) of SAE 30 or 10W30 oil. Use any high quality detergent oil having the American Petroleum Institute (API) "service classification"—SC, SD, SE or SF.

Before each use, assure oil level is between FULL and ADD marks on dipstick (Fig. 4). Add oil if level is low.

1. Position mower on level surface and clean around oil dipstick.
2. Remove dipstick by rotating cap counterclockwise 1/4 turn.
3. Wipe dipstick and insert it into filler neck. Rotate cap clockwise 1/4 turn. Then remove dipstick and check level of oil on side of dipstick with FULL and ADD marks (Fig. 4). If level is low, add only enough oil to raise level to FULL mark on dipstick. **DO NOT FILL ABOVE FULL MARK BECAUSE ENGINE COULD BE DAMAGED WHEN STARTED. POUR OIL SLOWLY.**

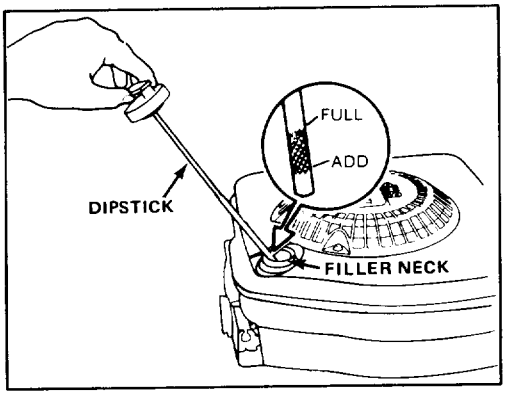

Figure 4

4. Insert dipstick into filler neck and rotate cap clockwise 1/4 turn to lock.

Note: Check oil level each time mower is used or after every 5 operating hours. Initially, change oil after the first 2 hours of operation; thereafter, change oil after every 25 hours of operation. More frequent oil changes are required in dusty or dirty conditions.

WARNING

DANGER: Gasoline is extremely flammable and explosive under certain conditions. Do not smoke when handling fuel and keep fuel far away from open flames and sparks. Never buy more than a 30 day supply of gasoline. Store it in an approved container. Keep gasoline out of reach of children.

Refuel outdoors and only when engine is cold. Do not fill tank full. Fill tank to within 1/4" to 1/2" (6 to 13 mm) from bottom of filler neck, not into filler neck. This space is for expansion of fuel. Use funnel or spout to prevent spilling. Wipe up any spilled gas.

FILL FUEL TANK WITH GASOLINE

Note: The Toro Company strongly recommends the use of fresh, clean, UNLEADED regular grade gasoline in Toro gasoline powered products. Unleaded gasoline burns cleaner, extends engine life, and promotes good starting by reducing the build-up of combustion chamber deposits. Leaded gasoline can be used if unleaded is not available.

1. Clean around fuel tank cap and remove cap from tank (Fig. 4). Using unleaded gasoline, fill fuel tank to within 1/2 inch (13 mm) from bottom of filler neck. Do not fill tank full.
2. Install fuel tank cap and wipe up any spilled gasoline.
3. Move fuel shut-off valve to "ON" position (Fig. 5).

BEFORE OPERATING

IMPORTANT: DO NOT MIX OIL WITH THE GASOLINE. NEVER USE METHANOL, GASOLINE CONTAINING METHANOL, GASOHOL CONTAINING MORE THAN 10% ETHANOL, OR WHITE GAS BECAUSE ENGINE FUEL SYSTEM DAMAGE COULD RESULT.

DO NOT USE FUEL ADDITIVES OTHER THAN THOSE MANUFACTURED FOR FUEL STABILIZATION DURING STORAGE SUCH AS TORO'S STABILIZER/CONDITIONER OR A SIMILAR PRODUCT. TORO'S STABILIZER/CONDITIONER IS A PETROLEUM DISTILLATE BASED STABILIZER/CONDITIONER. TORO DOES NOT RECOMMEND STABILIZERS WITH AN ALCOHOL BASE SUCH AS ETHANOL, METHANOL OR ISOPROPYL. STABILIZERS SHOULD NOT BE USED TO TRY TO ENHANCE THE POWER OR PERFORMANCE OF MACHINE.

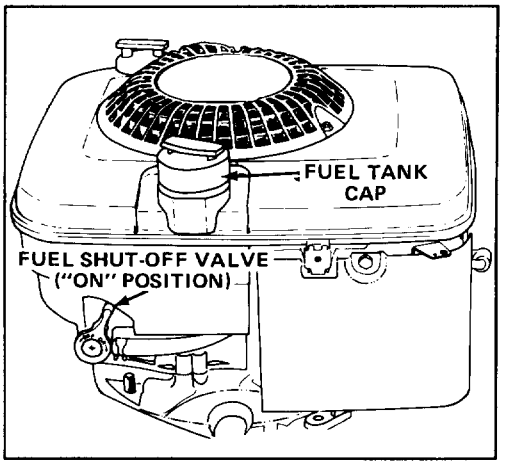

Figure 5

OPERATING INSTRUCTIONS

OPERATING TIPS

1. CHECK OIL LEVEL—Maintain oil level between ADD and FULL marks as shown on dipstick (Fig. 4).

2. BEFORE EACH MOWING—Assure engine brake, self-propelled drive (model 20668 only), and control bar function properly. When control bar is released, blade and self-propelled drive are designed to stop.

3. CUTTING AND BAGGING—Best results are achieved when engine is running at maximum speed and only about 1/3 of the grass blade is cut. If long grass must be cut, use highest height-of-cut setting for first mowing. Then recut the grass at a more normal setting. If too long of grass is cut, mower may plug and cause engine to stall.

4. SHARP BLADE—Begin each cutting season with a sharp blade. Periodically file down nicks.

5. MULCHING—In summer when grass grows slower and is drier, mulch by closing chute door (Fig. 6). For convenience and protection, keep grass bag on mower.

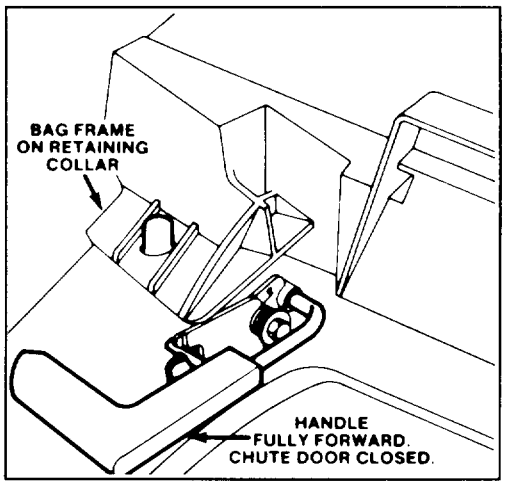

Figure 6

STARTING, STOPPING, AND SELF-PROPELLING (self-propelled model)

1. CONTROLS—Throttle, ground speed control (model 20668), control bar, and fingertip starter are on upper handle (Figs. 7 & 8).

OPERATING INSTRUCTIONS

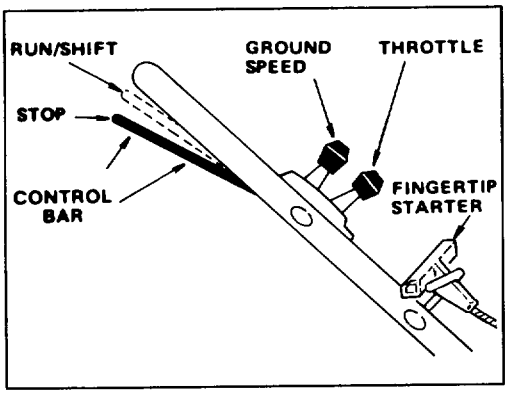

Model 20668

Figure 7

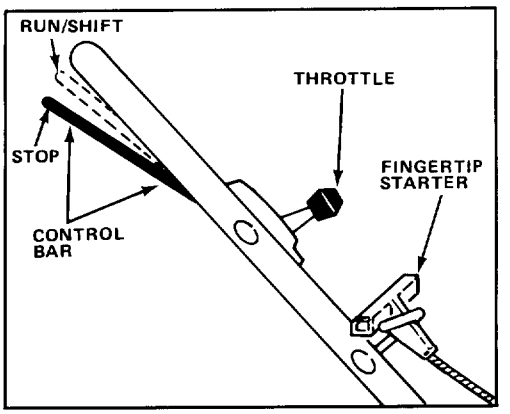

Model 20563

Figure 8

2. Push spark plug wire onto spark plug (Fig. 17).

3. STARTING—Move ground speed control to "N" (model 20668 only) and throttle to CHOKE. Lift control bar to handle (Figs. 7 & 8) and hold. Pull fingertip starter out until positive engagement results; then pull vigorously to start the engine. Regulate throttle as desired when engine starts.

4. GROUND SPEED (model 20668 only) (Fig. 7)—Move ground speed control to desired setting. Number "1" is slow, "2" is medium, and "3" is a fast walking pace. Move ground speed control to "N" when using the mower for trimming and whenever leaving mower.

5. WHEEL TRACTION OPERATION (model 20668 only) (Fig. 7)—Allow control bar to move into the RUN/SHIFT position. Move ground speed control to desired setting and squeeze control bar against handle to drive.

Note: The drive wheels are equipped with freewheeling clutches which enable the mower to be pulled rearward easier when the wheel drive is disengaged. To disengage the clutches, mower must be pushed forward at least 1" after wheel drive operation has stopped.

6. STOPPING—To stop engine, release control bar. Pull wire off spark plug if mower will be unattended or not used.

USING GRASS BAG

Keep bag installed when bagging or mulching.

1. Stop engine and wait for all parts to stop.

2. Assure discharge door handle is fully forward and pin is engaged in catch (Fig. 9).

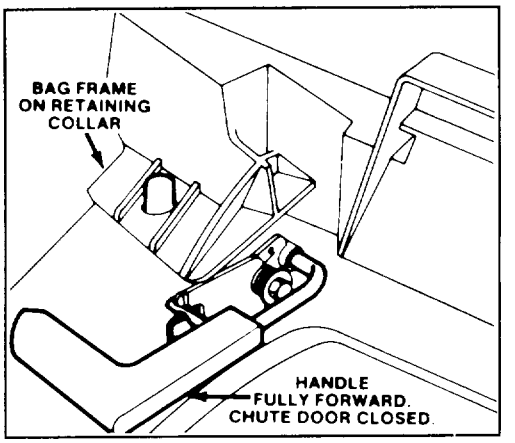

Figure 9

3. INSTALLING BAG—Slide hole in bag frame onto retaining post on housing (Fig. 9) and set rear of bag frame onto lower handle.

4. Pull discharge door handle forward until pin clears catch and move handle rearward until pin locks in bag notch (Fig. 10). Discharge door in mower housing is now open. It may be necessary to push down on top right of bag door to release handle locking pin from catch.

⚠ CAUTION

Except when side discharge attachment is used, never open chute door on mower when engine is running because grass clippings and other debris discharges with enough force to cause injury.

The grass bag material will catch and contain the majority of foreign objects such as small stones and other similar debris. The bag material, however, is subject to normal wear and deterioration. So check the bag frequently, and if it is defective, install a new genuine TORO replacement bag that has this or similar warning.

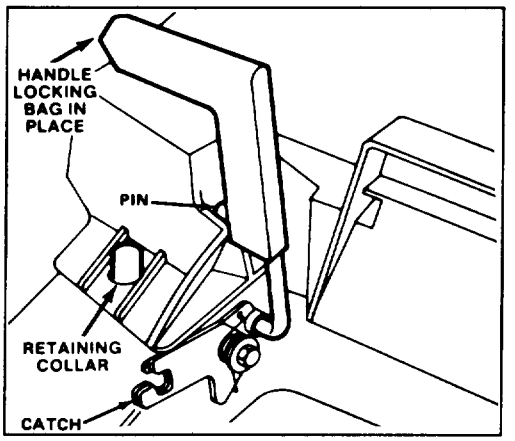

Figure 10

5. EMPTYING BAG—Stop engine and wait for all parts to stop. Move discharge door handle forward to engage the locking pin with catch (Fig. 9). Grasp handle at front and rear of bag and lift bag off mower. Gradually tip bag forward to empty clippings.

6. To reinstall bag, repeat steps 3-4.

⚠ CAUTION

If discharge door cannot be closed because grass clippings clog discharge area, gently move discharge door handle back and forth until door can be closed completely. Do not force discharge door closed because door or handle may be damaged. If door still cannot be closed, stop engine and remove obstruction.

ADJUSTING HEIGHT-OF-CUT

Five letters cast into the housing represent each graduated increment (Fig. 11).

1. Stop the engine.

2. For easier adjustment, lift housing up so wheel is off ground. Squeeze adjusting lever toward wheel and move to desired setting (Fig. 11). Assure pin on adjusting lever engages slot in housing. Adjust all wheels to the same setting.

Note: Front wheels can be adjusted to 1/2 inch. Move adjusting lever past "A" and release pin into hole in housing.

OPERATING INSTRUCTIONS

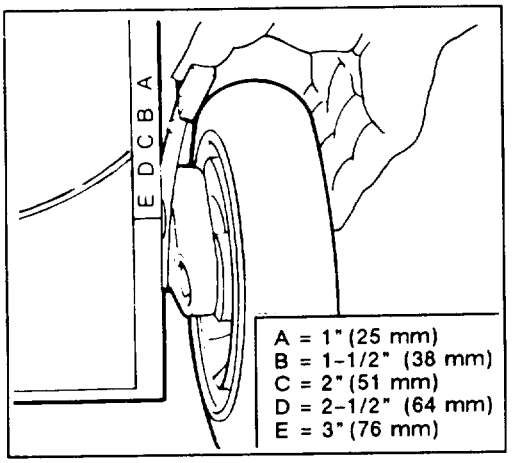

Figure 11

MAINTENANCE

⚠ CAUTION

Pull wire off spark plug before performing adjustments or maintenance.

SERVICING AIR CLEANER

Normally, replace air cleaner after every 25 operating hours. More frequent replacement is required when mower is operated in dusty or dirty conditions.

1. Stop engine and pull wire off spark plug (Fig. 12).
2. Remove screw securing air cleaner cover to engine (Fig. 12). Tilt cover down and clean thoroughly.
3. Remove paper air cleaner filter (Fig. 13) and discard.
4. Insert new paper air cleaner filter cartridge so lip touches back plate as shown in Figure 13.
5. Replace air cleaner cover and secure with screw.

IMPORTANT: Do not operate engine without air cleaner element because extreme engine wear and damage will likely result.

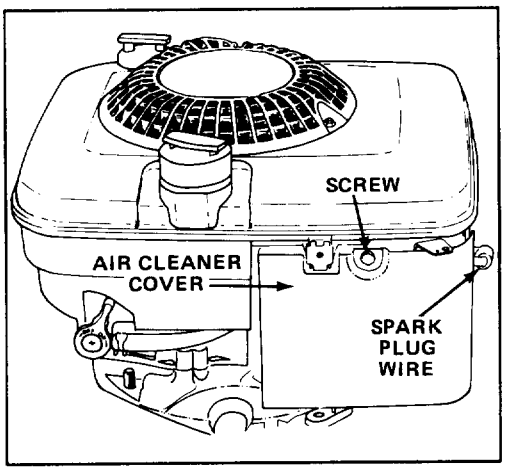

Figure 12

MAINTENANCE

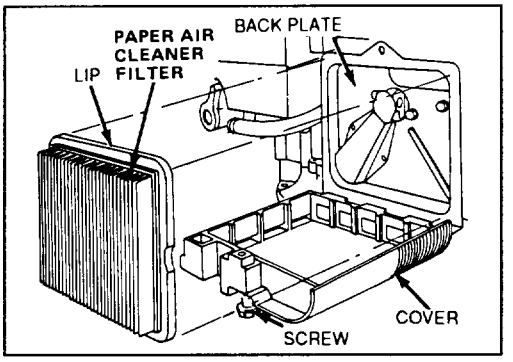

Figure 13

REPLACING SPARK PLUG

Use a Champion RCJ8 or Autolite 245 spark plug or equivalent. Correct air gap is 0.030" (0.76 mm). Remove plug after every 25 operating hours and check its condition.

1. Stop engine and pull wire off spark plug (Fig. 12).
2. Clean around spark plug and remove plug from cylinder head.

IMPORTANT: Replace a cracked, fouled, or dirty spark plug. Do not sand blast, scrape, or clean electrodes because engine damage could result from grit entering cylinder.

3. Set air gap at 0.030" (0.76 mm) (Fig. 14). Install correctly gapped spark plug and gasket seal. Tighten plug firmly to 15 ft-lb (20 N·m).

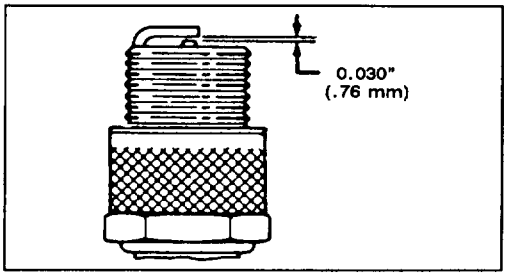

Figure 14

DRAINING GASOLINE

1. Stop engine and wait for engine to cool. Pull wire off spark plug (Fig. 12).

Note: Drain gasoline from a cold engine only.

2. Turn the fuel shut-off valve to the OFF position (Fig. 15).
3. Remove cap from fuel tank and use pump-type syphon to drain fuel into clean gas can.

Note: This is the only procedure recommended for draining fuel.

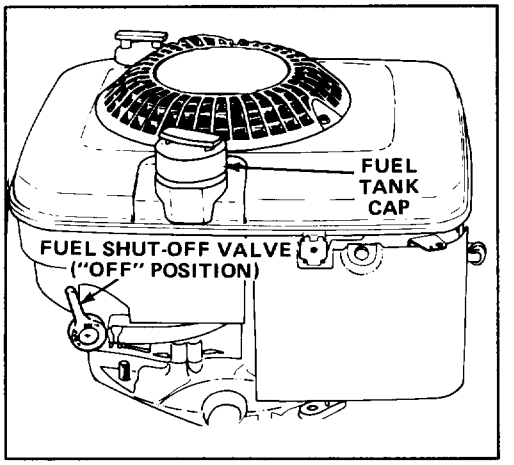

Figure 15

ADJUSTING THROTTLE

Throttle control adjustment may be required if engine does not start or stop. Whenever a new throttle control cable is installed, throttle must be adjusted.

1. Stop engine and pull wire off spark plug (Fig. 12).
2. Move throttle control to FAST.
3. Loosen cable clamp screw until throttle cable slides (Fig. 16). Align holes in throttle lever and throttle bracket using a .12" (3 mm) dia. pin or a 1/8" dia. drill (Fig. 17). Tighten cable clamp screw to lock adjustment in place.

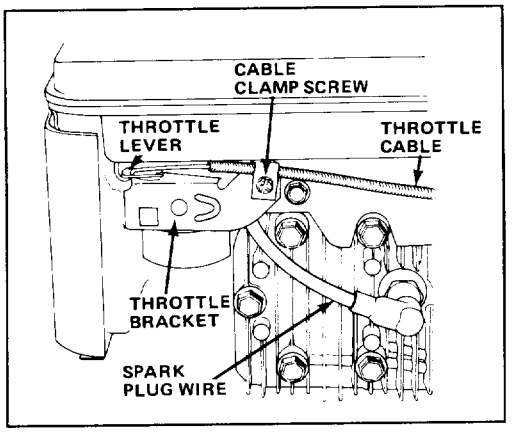

Figure 16

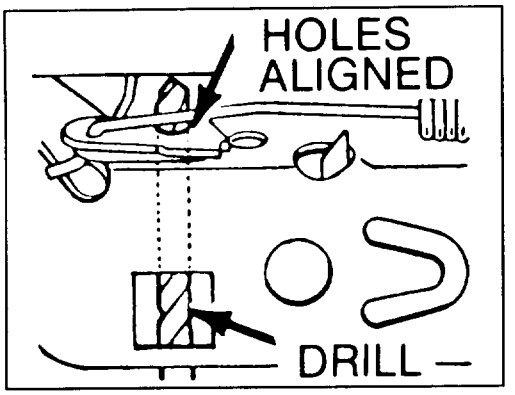

Figure 17

CHANGING CRANKCASE OIL

Change oil after the first 2 operating hours and after every 25 hours thereafter. Since warm oil drains better and carries more contaminants than cold, run engine for a minute or so before draining oil.

1. Stop engine and pull wire off spark plug (Fig. 12).
2. If necessary, remove grass bag. Drain gasoline from fuel tank: refer to Draining Gasoline, page 9.
3. Tip mower on its right side. Remove drain plug from underside of mower using an adjustable wrench (Fig. 18). Place a drain pan under mower.
4. Lower mower to allow oil to drain into pan.
5. After draining, clean drain plug and reinstall it. Wipe up any spilled oil. Fill engine with fresh oil: refer to Fill Crankcase With Oil, page 4.

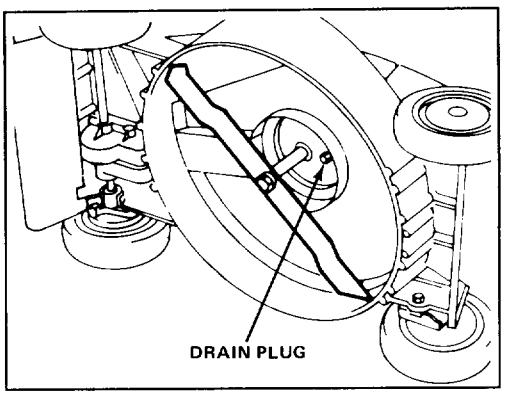

Figure 18

ADJUSTING WHEEL DRIVE (self-propelled model only)

If mower does not self-propel or has a tendency to creep forward when drive is not engaged, adjust wheel drive control knob on rear of gear box.

1. If necessary, remove grass bag.
2. ADJUSTMENT (Fig. 19)—Rotate control knob clockwise 1/2 turn if mower does not self-propel. If mower creeps forward, rotate knob 1/2 turn counterclockwise to loosen belt.

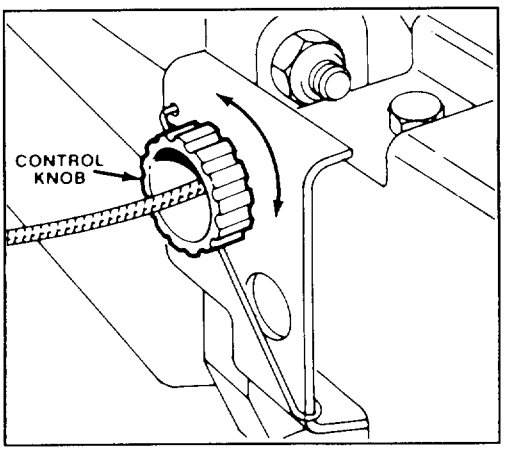

Figure 19

3. CHECK ADJUSTMENT—With engine running, and ground speed control in 1, 2 or 3, slowly pull mower backwards while control bar is gradually moved toward handle. Adjustment is correct when rear wheels stop turning and control bar is about 1-1/2 inches from handle (Fig. 20).

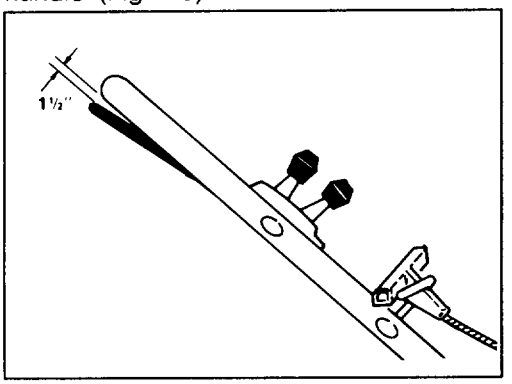

Figure 20

4. Repeat steps 2 and 3 until properly adjusted.

INSPECTING/REMOVING/SHARPENING BLADE

1. Stop engine and pull wire off spark plug (Fig. 12).
2. Drain gasoline from fuel tank; refer to Draining Gasoline, page 9.
3. Tip mower on its right side (Fig. 21). Avoid rotating blade because starting problems may result.

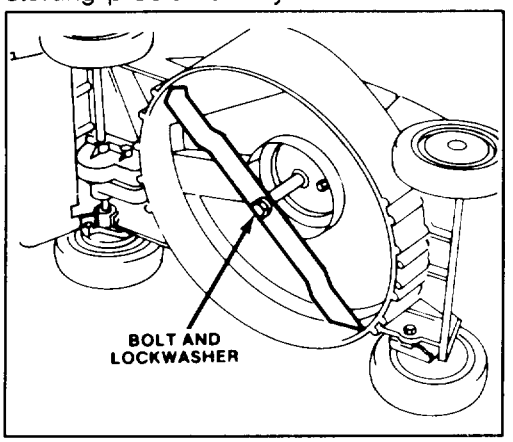

Figure 21

4. INSPECTING BLADE—Carefully examine blade for sharpness and wear, especially where flat and curved parts meet (Fig. 22A). Since sand and abrasive material can wear away the metal that connects the flat and curved parts of the blade, check blade before using the mower. If a slot or wear is noticed (Fig. 22B & C), replace blade. Refer to step 5.

Note: For optimum performance, install new blade before cutting season begins. During the year, file down small nicks to maintain the cutting edge.

⚠ CAUTION

If blade is allowed to wear, a slot may form near the sail. Eventually a piece of blade may break off resulting in serious injury to yourself or a bystander.

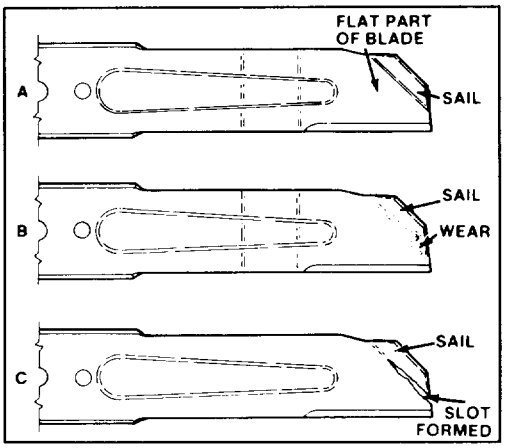

Figure 22

5. REMOVING BLADE—Grasp end of blade using a rag or thickly padded glove. Remove blade bolt, lockwasher, and blade (Fig. 21).

6. SHARPENING BLADE—Using a file, sharpen top side of blade and maintain original cutting angle (Fig. 23). The blade will remain balanced if same amount of material is removed from both cutting edges.

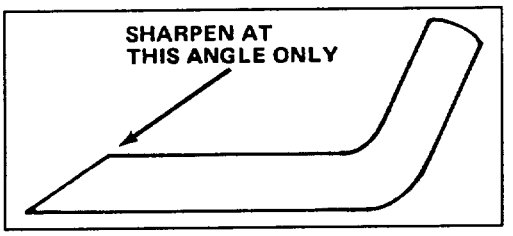

Figure 23

IMPORTANT: Check balance of blade by putting it on a blade balancer. An inexpensive balancer can be purchased at a hardware store. A balanced blade stays in a horizontal position and an unbalanced blade settles to the heavy side. If blade is not balanced, file more metal off cutting edge on heavy end of blade.

7. Install sharp, balanced blade with lockwasher and blade bolt. Sail part of blade must point toward top of mower housing to assure correct installation. Tighten the blade bolt to 50 ft-lb (68 N·m).

LUBRICATION

After every 25 operating hours or when season ends, front and rear wheels must be lubricated.

1. Apply 2 or 3 drops of light oil on inside of front and outside of all wheel bolts. Spin wheels to distribute oil into bushings. Wipe up excess oil.

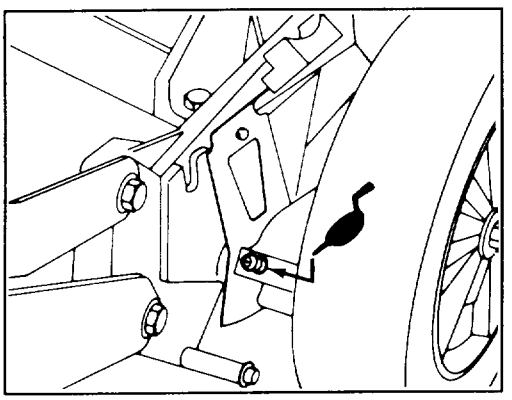

Self-propelled model only

Figure 24

2. On self-propelled models, move rear wheel height-of-cut levers to "C" setting. Wipe grease fittings with clean rag (Fig. 24). Install grease gun onto fitting and gently apply 2 or 3 pumps of #2 Multi-Purpose Lithium Base Grease. Excess pressure may damage seals.

ADJUSTING GROUND SPEED CONTROL FOR NEUTRAL (self-propelled model only)

Whenever a new ground speed control cable is installed or if mower drives when ground speed control is in "N", an adjustment is required.

1. Stop engine and remove grass bag.
2. Remove two capscrews and lift off transmission cover (Fig. 25).

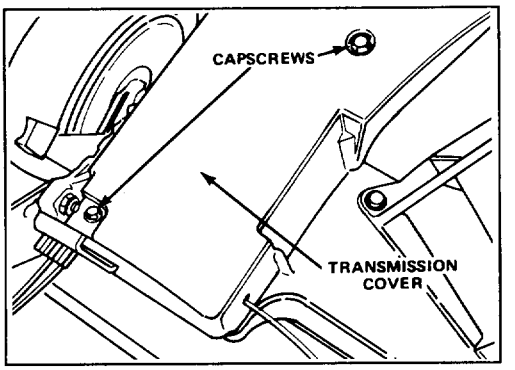

Figure 25

2. Drain gasoline from fuel tank: refer to Draining Gasoline, page 9.
3. ADJUSTMENT (Fig. 26)—Loosen cable clamp screw until cable conduit slides. Push transmission control lever toward cable clamp screw until lever "snaps" into the neutral detent. Pull cable to remove slack and tighten clamp screw.
4. CHECK ADJUSTMENT—Assure ground speed control is in "N" and pull mower backwards. Pulley should not rotate. If pulley does rotate, readjust as explained in step 3.
5. Reinstall transmission cover and grass bag.

MAINTENANCE

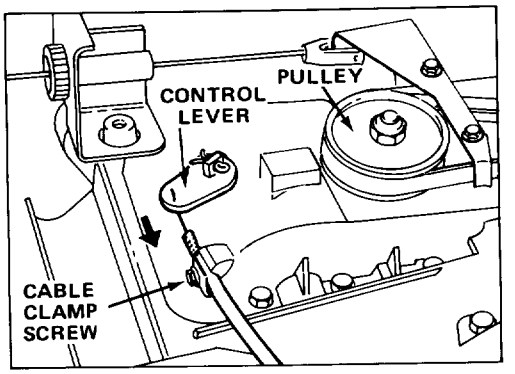

Figure 26

ADJUSTING BLADE BRAKE

Whenever a new blade brake cable assembly is installed, an adjustment is required.

1. Stop engine and pull wire off spark plug (Fig. 12).
2. CHECK ADJUSTMENT (Fig. 27)—Move control bar toward handle until slack in wire is removed. Gap between brake lever and handle must be 1/8"-3/16". See step 3 for adjustment.
3. ADJUST CABLE CONDUIT (Fig. 27)—Loosen nut on cable bracket. Insert 1/8"-3/16" object between brake lever and handle. Pull down on cable conduit until all slack is removed from wire. Then tighten nut.

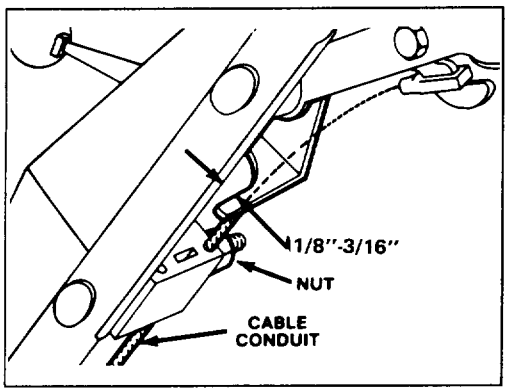

Figure 27

CLEANING MOWER HOUSING

To assure optimum performance, keep underside of mower housing and inside of discharge area clean.

1. Stop engine and pull wire off spark plug (Fig. 12).
2. Tip mower on its right side (Fig. 28). Avoid rotating blade because starting problems may result.
3. Remove dirt and grass clippings that stick to housing by spraying it with a garden hose. Scrape out remaining debris with hardwood scraper. Avoid burrs and sharp edges.

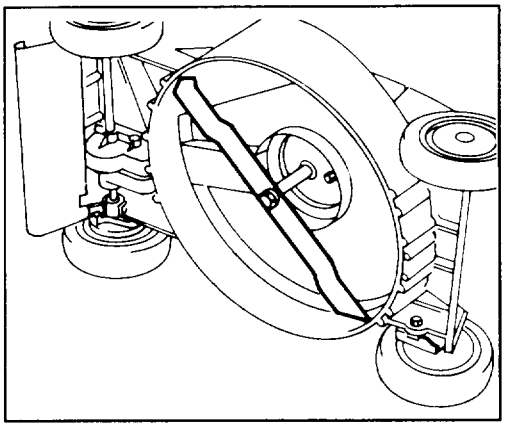

Figure 28

PREPARING MOWER FOR STORAGE

1. For long term storage, either drain gasoline from fuel tank or add a fuel additive to the gasoline. To drain gasoline, refer to Draining Gasoline, page 9. After fuel is drained, start engine and let it idle until all fuel is consumed and engine stops. If gasoline is not drained and a fuel stabilier is not added, gum-like varnish deposits will form and cause poor engine operation, even starting problems.

MAINTENANCE

Fuel can be left in gas tank only if a fuel stabilizer, such as Toro's Stabilizer/Conditioner, is added to gasoline before storing. Toro's Stabilizer/Conditioner is a petroleum distillate based stabilizer/conditioner. Toro does not recommend stabilizers with an alcohol base, such as ethanol, methanol or isopropyl. Use fuel stabilizer in recommended quantities as specified on container.

Under normal conditions, all fuel additives remain effective in fuel for 6–8 months.

2. Drain oil: refer to Changing Crankcase Oil, page 10. After oil is drained, do not fill crankcase with oil until the following steps (3-9) are completed.

3. Remove spark plug and pour 2 tablespoons of SAE 10W30 oil into hole in cylinder. Pull starter rope slowly to coat inside of cylinder. Install spark plug and tighten to 15 ft-lb (20 N·m). **DO NOT INSTALL WIRE ON SPARK PLUG.**

4. Clean mower housing: refer to Cleaning Mower Housing, page 13.

5. Check condition of blade: refer to Inspecting/Removing/Sharpening Blade, pages 11–12.

6. Tighten all nuts, bolts, and screws.

7. Clean dirt and chaff from cylinder, cylinder head fins, and blower housing. Also remove grass clippings, dirt, and grime from external parts of the engine, shrouding, and top of mower housing.

8. Clean air cleaner: refer to Servicing Air Cleaner, pages 8–9.

9. Lubricate the wheels: refer to Lubrication, page 12.

10. Touch up all rusted or chipped paint surfaces. Toro Re-Kote paint is available from an Authorized TORO Service Dealer.

11. Fill crankcase with oil; refer to Fill Crankcase With Oil, page 4.

12. Store mower in a clean, dry place. Cover mower to keep it clean and protected.

PRODUCT IDENTIFICATION

A model and a serial number decal is located at rear of mower housing, near the discharge door. Always refer to specific numbers on this decal in correspondence or when replacement parts are needed.

TORO SERVICE SUPPORT

If help - concerning safety, set-up, operation, maintenance, or troubleshooting - is ever needed, contact the local Authorized TORO Service Dealer or Distributor. Refer to the "Yellow Pages" for assistance. In addition to skilled service technicians, the dealer and distributor have factory approved accessories and replacement parts. Keep your Toro all TORO. Buy genuine TORO replacement parts and accessories.

OPTIONAL EQUIPMENT

For special conditions the following accessories may be purchased at your local authorized TORO Service Dealer.

1. Side Discharge Kit, Model No. 59108—Installs in seconds. Rear mounted in place of the grass bag. Disperses clippings while trimming on both sides (Fig. 29).

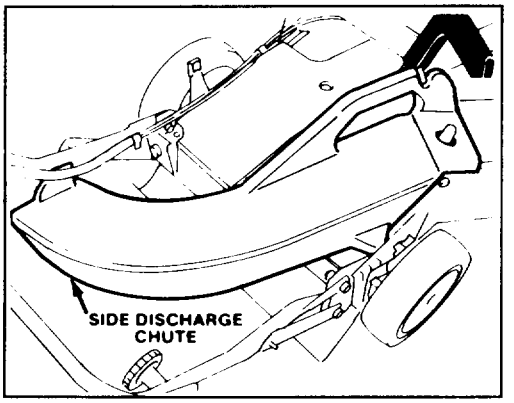

Figure 29

2. Dethatcher Kit, Model No. 59131—Installs in minutes. Front mounted for easy maneuverability. Spring tines loosen thatch for clean vacuuming into grass bag (Fig. 30).

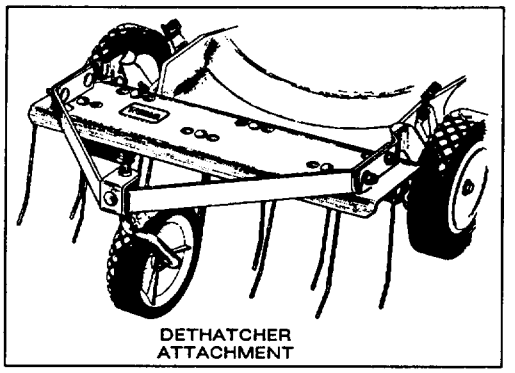

Figure 30

3. Leaf Shredder Kit, Model No. 59180—Installs on underside of mower in minutes without requiring removal of blade. Shreds leaves into small pieces for clean vacuuming into grass bag and convenient disposal (Fig. 31).

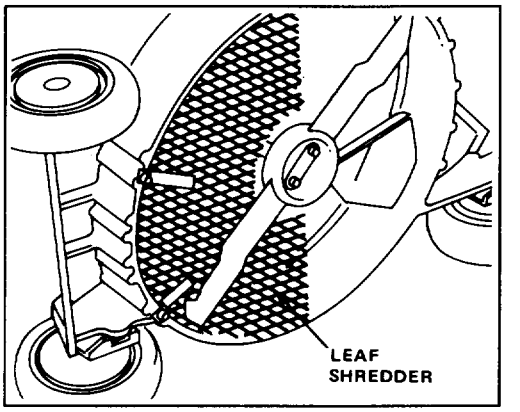

Figure 31

4. Spark Arrestor, Briggs & Stratton Part No. 396800—If a spark arrestor is required because of local, state, or federal regulations, it may be purchased at from a Briggs & Stratton Service Dealer. If mower is operated on any California forest, brush, or grass covered land without a properly operating spark arrestor, the operator is violating state law, Section 4442 Public Resources Code.

The Toro Promise

A Two Year Limited Warranty On All Gasoline Powered Consumer Products

The Toro Company promises to repair these TORO Products if defective in materials or workmanship. The following time periods from the date of purchase apply:

Residential Product ..... 2 Years
Residential Products Used Commercially ..... 45 Days

The cost of parts and labor are included, but the customer pays the transportation costs. Just return any residential product to an Authorized TORO Service Dealer or TORO Distributor.

Should you feel your TORO Product is defective and wish to rely on The Toro Promise, you may return it to:

1. Contact any Authorized TORO Service Dealer, TORO Master Service Dealer, or TORO Distributor. (The Yellow Pages of your telephone directory is a good reference source).
2. He will either instruct you to return the product to him or recommend another Authorized TORO Service outlet which might be more convenient.
3. Bring the product along with your original sales slip, or other evidence of purchase date, to the service dealer.
4. The servicing dealer will inspect the unit, advise you whether the product is defective and, if so, make all repairs necessary to correct the defect without any extra charge to you.

If for any reason you are dissatisfied with the analysis of the defect or the service performed, you may contact us.

Write: TORO Customer Service Dept.
8111 Lyndale Avenue South
Minneapolis, MN 55420

The above remedy of product defects through repair by an Authorized TORO Service Dealer is the purchaser's sole remedy for any defect.

THERE IS NO OTHER EXPRESS WARRANTY. ALL IMPLIED WARRANTIES OF MERCHANTIBILITY AND FITNESS FOR USE ARE LIMITED TO THE DURATION OF THE EXPRESS WARRANTY.

Some states do not allow limitations on how long implied warranty lasts, so the above limitation may not apply to you.

This warranty applies only to parts or components which are defective and does not cover repairs necessary due to normal wear, misuse, accidents, or lack of proper maintenance. Regular, routine maintenance of the unit to keep it in proper operating condition is the responsibility of the owner.

All warranty repairs reimbursable under The Toro Promise must be performed by an Authorized Toro Service Dealer using Toro approved replacement parts.

Repairs or attempted repairs by anyone other than an Authorized TORO Service Dealer are not reimbursable under the TORO Promise. In addition, these unauthorized repair attempts may result in additional malfunctions, the correction of which is not covered by warranty.

THE TORO COMPANY IS NOT LIABLE FOR INDIRECT OR CONSEQUENTIAL DAMAGES IN CONNECTION WITH THE USE OF THE PRODUCT.

Some states do not allow the exclusion of incidental or consequential damages, so the above exclusion may not apply to you.

This warranty gives you specific legal rights, and you may also have other rights which vary from state to state.

COUNTRIES OTHER THAN THE UNITED STATES OR CANADA

Customers who have purchased TORO products exported from the United States or Canada should contact their TORO Distributor (Dealer) to obtain guarantee policies for your country, province, or state. If for any reason you are dissatisfied with your Distributor's service or have difficulty obtaining guarantee information, contact the TORO importer. If all other remedies fail, you may contact us at The Toro Company.