FORM NO. 3320-552

TORO

MODEL NO. 16212-0000001 & UP
MODEL NO. 16212WG-0000001 & UP

OPERATOR'S MANUAL

21" (0.53 m) SP SIDE DISCHARGE
FINGERTIP START

ENGLISH

⚠ SAFETY INSTRUCTIONS

ONLY COPY
DO NOT REMOVE
Tech. Publications

BEFORE OPERATING

1. Read this manual carefully before operating the mower. Become familiar with the controls and proper use of the mower. Never allow children to operate the mower or adults to operate it without proper instructions.
2. Keep everyone, especially children and pets, away from the area of operation. Thoroughly inspect area where mower will be used. Remove sticks, stones, wire and debris.
3. Wear long pants and substantial shoes. Do not operate mower while wearing open sandals or when barefoot.
4. Check fuel level before starting engine. Do not fill fuel tank indoors, when the engine is running, or until engine cools for several minutes after running. Wipe up spilled gasoline before starting engine.
5. Keep all guards, shields and safety devices in place. Repair or replace defective or damaged parts.
6. Disengage self-propelled drive before starting engine. Engine and blade are designed to stop when control bar is released. Assure control and brake function properly before each use of mower.

WHILE OPERATING

7. Do not run engine indoors.
8. Always maintain secure footing. Keep a firm grip on the handle and walk; never run. Never operate mower in wet grass. Mow only in daylight or in good artificial light.
9. Mow across the face of slopes; never up and down. Use extreme caution when changing direction on slopes. Do not mow excessively steep slopes.
10. Keep face, hands and feet away from the mower housing and cutter blade when the engine is running. Stay behind the handle until the engine stops and keeps clear of discharge opening at all times.
11. During operation, grass deflector or complete bagging assembly must be installed on mower.
12. Shut engine off and wait for all moving parts to stop before unclogging chute or removing grass catcher.
13. Since the blade rotates for a few seconds after blade control is released, stay behind the handle until all moving parts stop.
14. After striking a foreign object or if mower vibrates abnormally, stop engine and remove wire from spark plug. Check mower for damage and make all repairs before using mower again.
15. Stop the engine before adjusting the height-of-cut.
16. Stop the blade when crossing a gravel driveway, road or sidewalk.
17. Stop engine before leaving the operator's position — behind the handle. Disconnect wire from spark plug if mower will be unattended.
18. Do not touch muffler or engine while it is running or shortly after it is stopped because muffler and engine will be hot enough to cause a burn.

MAINTENANCE

19. Perform only those maintenance instructions described in this manual. If major repairs are ever needed or if assistance is desired, contact an Authorized TORO Service Dealer.
20. Before mower is cleaned, inspected, serviced or adjusted, stop engine and disconnect wire from spark plug. Keep wire away from plug to prevent accidental starting.
21. To assure the mower is in safe operating condition, frequently check and keep all nuts, bolts and screws tight. Assure blade bolt is tightened to proper specification.
22. To reduce fire hazard, keep engine free of excessive grease, grass, leaves and accumulations of dirt.
23. Check optional grass catcher bag frequently for wear, tears or deterioration. Replace with a new bag for your protection.
24. Allow engine to cool before storing mower in any enclosure. Do not store mower near any

⚠ SAFETY INSTRUCTIONS

open flame or where gasoline fumes may be ignited by a spark.

25. Do not overspeed the engine by changing governor settings.

26. At the time of manufacture the mower conformed to the safety standards in effect for rotary mowers. To assure optimum performance and continued safety certification of the mower, use genuine TORO replacement parts and accessories. Replacement parts and accessories made by other manufacturers may result in non-conformance with the safety standards, and that could be dangerous.

SYMBOL GLOSSARY



© The Toro Company – 1989

TABLE OF CONTENTS

	Page
Set-Up Instructions	3
Before Operating	4
Operating Instructions	5-6
Maintenance	7-10
Servicing Air Cleaner	7
Replacing Spark Plug	7
Cleaning Mower Housing	7
Draining Fuel	7
Inspecting, Removing, Sharpening Blade	8
Lubrication	8-9
Checking Transmission Oil Level	9
Adjusting Wheel Drive Control	9
Adjusting Blade Brake	9-10
Preparing Mower For Storage	10
Optional Spark Arrestor	10
Product Identification	10
TORO Service Support	10

SET-UP INSTRUCTIONS

INSTALL HANDLES AND STARTER ROPE

1. LOWER HANDLES (Fig. 1) — Push ends of handle together and install on pivot pins. Move handle and latches backward until handle studs snap into center hole. Push hair pin cotters through holes in pivot pins.

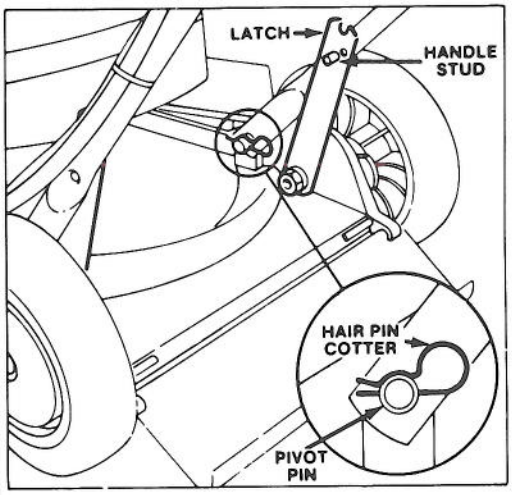

Figure 1

2. UPPER HANDLE (Fig. 2) — Secure upper and lower handles in place with handle bolts and knobs. Control cables must be in front of lower handle cross member. Secure control cables in position with cable ties.

3. STARTER ROPE (Fig. 3) — Pull starter rope through opening in rope guide. By squeezing control bar (Fig. 7) against handle, blade brake will release and allow rope to be pulled easily up to rope guide.

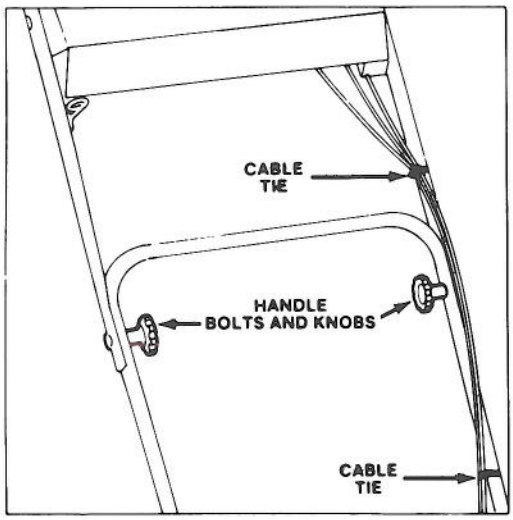

Figure 2

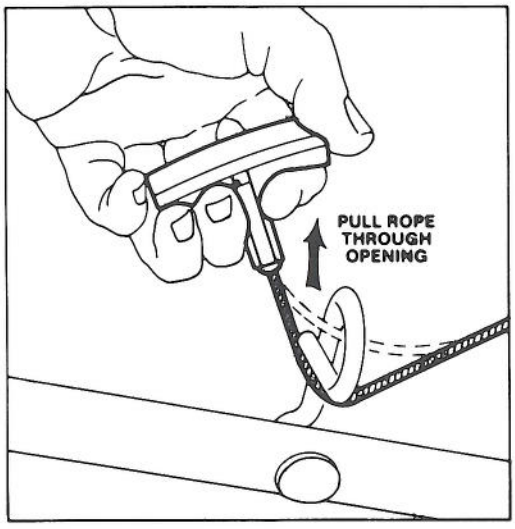

Figure 3

BEFORE OPERATING

⚠ DANGER: Gasoline is extremely flammable and explosive under certain conditions. Do not smoke when handling fuel and keep fuel far away from open flames and sparks. Never buy more than a 30 day supply of gasoline. Store gasoline in an approved container and keep it out of the reach of children.

Refuel outdoors, only when engine is cold. Fill tank to within 1/4" to 1/2" (6 to 13 mm) from its top. This space is for expansion of fuel. Use funnel or spout to prevent spilling. Wipe up any spilled gas.

MIX GASOLINE AND OIL (Fig. 4)

This product uses a two-cycle engine which requires a mixture of gasoline and two-cycle oil (50:1 gas/oil ratio). Failure to use proper

1. OIL — For optimum performance, use Toro two-cycle oil available from your Toro dealer. A BIA TC-W approved two-cycle oil from a reputable oil company may be substituted. NEVER USE 4-CYCLE AUTOMOTIVE OILS SUCH AS SAE 30 or 10W30.

2. GASOLINE — Use leaded REGULAR. "No-lead" or "lead-free" gasoline is also acceptable. Gasoline substitutes, such as gasohol, white gas and gasoline additives must not be used because they may damage the engine. Do not use premium gas.

3. MIXING — In an approved gasoline container, thoroughly mix prescribed amount of gasoline and two-cycle oil (refer to Fuel Mixing Chart). DO NOT MIX FUEL IN MOWER FUEL TANK. FOR BETTER MIXING, OIL SHOULD BE AT ROOM TEMPERATURE.

4. Fill mower fuel tank to within 1/4" to 1/2" (6 to 13mm) from top of tank, not the filler neck. Install fuel tank cap securely.

50:1
Fuel Mixing Chart

Unit of Measure	Gasoline	Oil
U.S. Gallon	1 gallon	2.6 oz
Imperial Gallon	1 gallon	3 oz
Liter	1 liter	20 ml

Figure 4



Figure 5

OPERATING INSTRUCTIONS

2-IN-1 MOWING VERSATILITY

SIDE DISCHARGE — In summer, disperse clippings to the side when grass grows slower and is drier.

SIDE BAG — Optional side bag kit (Fig. 6) lets you bag lush grass in spring to help keep your lawn free of thatch forming clippings. In the fall, bag leaves while you mow to eliminate the hand-blistering raking job.

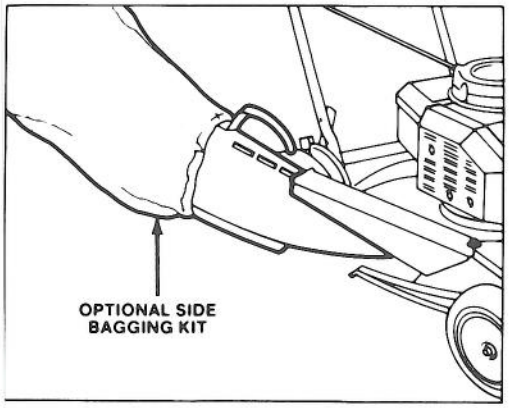

Figure 6

STARTING, STOPPING, SELF-PROPELLING

1. CONTROLS (Fig. 7) — Wheel drive control throttle, blade control bar and fingertip starter are on upper handle.

2. STARTING (Fig. 7) — Push wire onto spark plug. Move wheel drive control to DISENGAGE and throttle control to CHOKE. Cover hole in center of primer with thumb and push once. Hold control bar against handle. Pull fingertip starter and regulate throttle as required when engine starts.

Note: Choke and primer are usually not necessary when warm engine is being started.

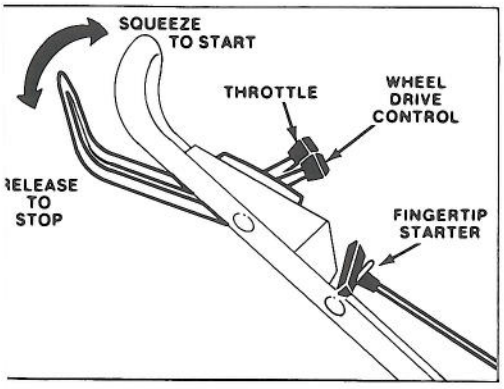

Figure 7

3. SELF-PROPELLING (Fig. 7) — Move wheel drive control to ENGAGE. Front wheels will now drive mower. For maneuvering and making turns, push down on handle to raise front wheels slightly off grass. Move control to DISENGAGE detent to stop front wheel drive.

4. STOPPING (Fig. 7) — Release control bar to stop engine and blade. Pull wire off spark plug if mower is unattended or not used.

OPERATING TIPS

1. BEFORE OPERATING — Assure engine, brake and control bar function properly. When control bar is released, engine and blade are designed to stop.

2. CUTTING AND BAGGING — To improve quality of cut, discharge clippings toward previously cut area. Best results are normally achieved when engine runs at maximum speed and only about 1/3 of the grass blade is cut. If long grass must be cut, use highest height-of-cut setting for first mowing. Then recut grass at a more normal setting. If too long of grass is cut or optional bag is allowed to get too full, discharge chute may plug and cause engine to stall. Empty optional grass bag often.

3. SHARPEN BLADE — Begin each cutting season with a sharp blade. Periodically file down nicks.

ADJUSTING HEIGHT-OF-CUT

Five notches cast into the housing represent each graduated increment (Fig. 8).

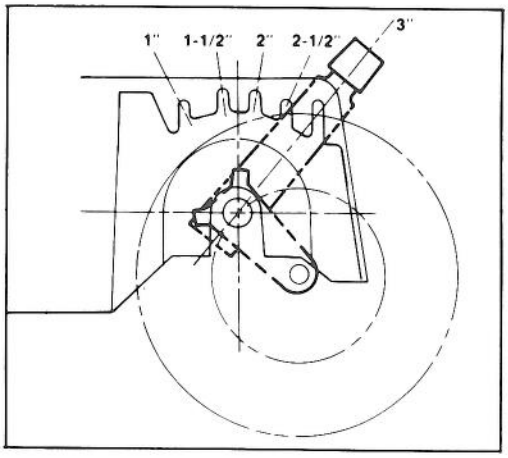

Figure 8

OPERATING INSTRUCTIONS

1. Stop the engine and pull wire off spark plug (Fig. 10).

2. For easier adjustment, lift housing up so wheel is off ground. Squeeze adjusting lever toward wheel (Fig. 9) and move them to desired setting. Assure pin on adjusting lever engages notch in housing. Adjust all wheels to the same setting.

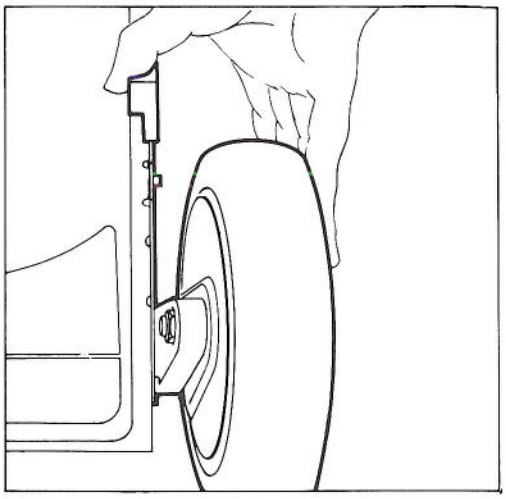

Figure 9

MAINTENANCE

CAUTION

Pull wire off spark plug before performing adjustments or maintenance.

SERVICING AIR CLEANING

Normally, clean air cleaner after every 50 operating hours. More frequent cleaning is required when mower is operated in dusty or dirty conditions.

1. Stop engine and pull wire off spark plug (Fig. 10).

2. Lift tabs at top of air cleaner cover and pivot cover down. Clean cover thoroughly (Fig. 10).

3. If outside of foam element is dirty, remove it from air cleaner body (Fig. 10). Clean thoroughly.

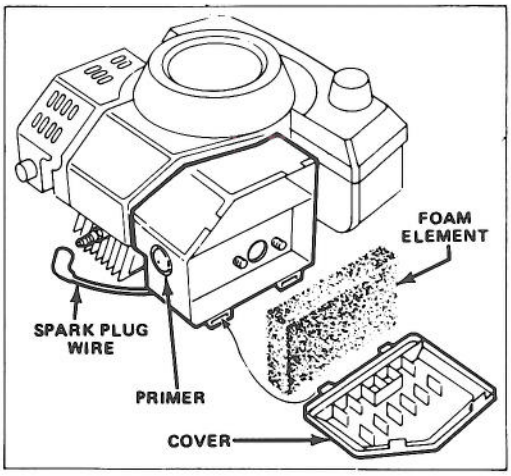

Figure 10

A. WASH foam element in a solution of liquid soap and warm water. Squeeze to remove dirt. Do not twist because foam may tear. Rinse thoroughly in clear water.

B. DRY by wrapping in a clean rag. Squeeze rag and foam element to dry.

C. SATURATE element with 5 teaspoons (25 ml) of SAE 30 engine oil. Squeeze element to remove excess oil and to distribute oil thoroughly. A damp element is desirable.

4. Install foam element and air cleaner cover.

IMPORTANT: Do not operate engine without air cleaner element because extreme engine wear and damage will likely result.

REPLACING SPARK PLUG

Use an NGKBPMR4A spark plug or equivalent. Correct air gap is 0.032" (0.81 mm). Remove plug after every 25 operating hours and check its condition.

1. Stop engine and pull wire off spark plug (Fig. 10).

2. Clean around spark plug and remove plug from cylinder head (Fig. 10).

IMPORTANT: Replace a cracked, fouled or dirty spark plug. Do not sand blast, scrape or clean electrodes because engine damage could result from grit entering cylinder.

3. Set air gap at 0.032" (0.81 mm) (Fig. 11). Install correctly gapped spark plug and gasket seal. Tighten plug firmly to 10 ft-lb (13.6 N·m).

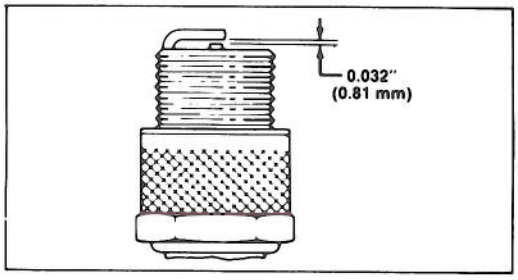

Figure 11

CLEANING MOWER HOUSING

To assure optimum performance, keep underside of mower housing and grass deflector clean.

1. Drain fuel tank: refer to Draining Fuel, page 7.

2. Tip mower on its left side (Fig. 12).

3. Remove dirt and grass clippings that stick to housing by spraying it with a garden hose. Scrape out remaining debris with hardwood scraper. Avoid burrs and sharp edges.

DRAINING FUEL

1. Stop engine. Pull wire off spark plug. (Fig. 10).

2. Remove cap from fuel tank and use pump-type syphon to drain fuel into clean gas can.

Note: This is the only procedure recommended for draining fuel.

MAINTENANCE

INSPECTING, REMOVING, SHARPENING BLADE

1. Stop engine and pull wire off spark plug (Fig. 10).

2. Drain fuel tank: refer to Draining Fuel, page 7.

3. Tip mower on its left side (Fig. 12).

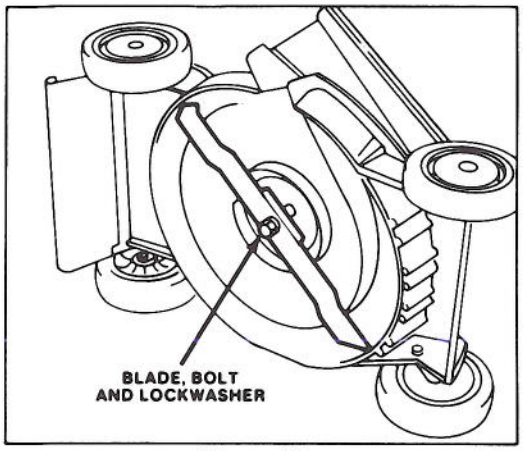

Figure 12

4. INSPECTING BLADE — Carefully examine blade for sharpness and wear, especially where flat and curved parts meet (Fig. 13A). Since sand and abrasive material can wear away the metal that connects the flat and curved parts of the blade, check blade before using the mower. If a slot or wear is noticed (Fig. 13B & C), replace blade. Refer to step 5.

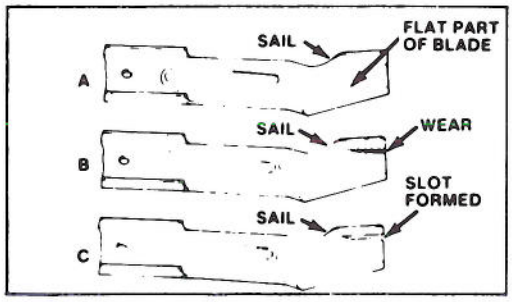

Figure 13

CAUTION

If blade is allowed to wear, a slot may form near the sail. Eventually a piece of blade may break off resulting in serious injury to yourself or a bystander.

5. REMOVING BLADE — Grasp end of blade using a rag or thickly padded glove. Remove blade bolt, lockwasher and blade (Fig. 12).

Note: For optimum performance, install new blade before cutting season begins. During the year file down small nicks to maintain the cutting edge.

6. SHARPENING BLADE — Using a file, sharpen top side of blade and maintain original cutting angle (Fig. 14). The blade will remain balanced if same amount of material is removed from both cutting edges.

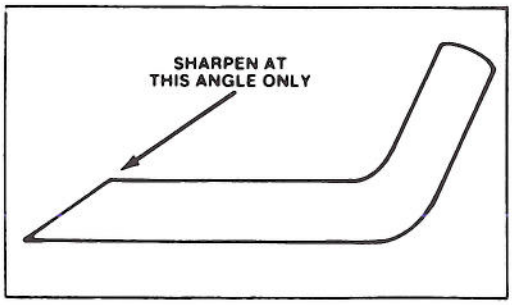

Figure 14

IMPORTANT: Check balance of blade by putting it on a blade balancer. An inexpensive balancer can be purchased at a hardware store. A balanced blade will stay in horizontal position and an unbalanced blade will settle to the heavy side. If blade is not balanced, file more metal off cutting edge on heavy end of blade.

7. Install sharp, balanced blade with lockwasher and blade bolt. Sail part of blade must point toward top of mower housing to assure correct installation. Tighten the blade bolt to 50 ft-lb (68 N·m).

LUBRICATION

After every 25 operating hours or when season ends, front and rear wheels must be lubricated.

1. OIL FRONT AND REAR WHEELS — Apply 2 or 3 drops of light oil on inside of wheel bolts. Spin wheels to distribute oil into bushings.

2. GREASE FRONT AXLE PIVOTS (Fig. 15) — Adjust height-of-cut to 3-inch setting and loosen wheel bolt to get additional clearance around grease fitting. Wipe grease fitting with clean rag. Install grease gun onto fitting and gently apply 2 or 3 pumps of #2 Multi-Purpose Lithium Base Grease. Excess pressure may damage seals.

MAINTENANCE

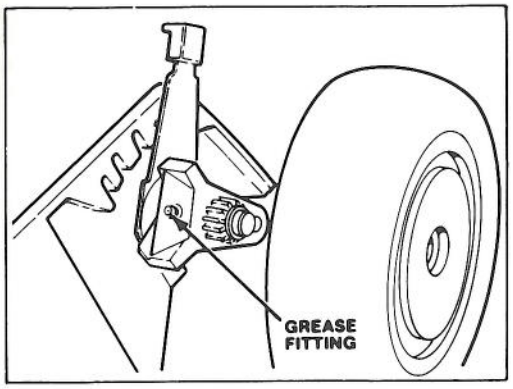

Figure 15

CHECKING TRANSMISSION OIL LEVEL

The transmission is filled with #90 gear oil that has a GL-5 or GL-6 rating. Level of gear oil must be checked at least every 25 operating hours, before storage and before the mowing season begins.

1. Stop engine and pull wire off spark plug (Fig. 10). Remove two screws and lift off transmission cover (Fig. 16).

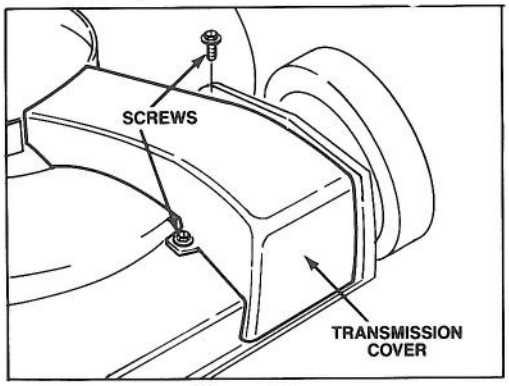

Figure 16

2. CHECKING GEAR OIL LEVEL (Fig. 17) — Position mower on level surface and clean around plastic plug. Remove plastic plug and watch for oil to ooze out of hole. If gear oil oozes out, quickly install plastic plug because oil is at proper level. If oil does not flow, add gear oil: see step 3.

IMPORTANT: Low oil level may indicate a leak where axle goes through both sides of transmission case. Transmission case should be inspected by an Authorized TORO Service Dealer.

3. ADDING GEAR OIL — Slowly add #90 gear oil that has a GL-5 or GL-6 rating. Stop when oil oozes out of hole in gear case, and quickly install plastic plug. DO NOT OVERTIGHTEN PLASTIC PLUG BECAUSE THREADS MAY STRIP.

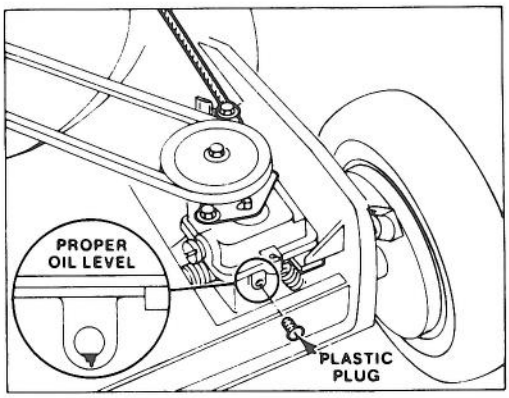

Figure 17

Note: A clean Plews type oil container or any other clean container with a small tip can be used to add oil. Using a dirty oil container could contaminate transmission case and eventually cause damage.

4. Reinstall transmission cover.

ADJUSTING WHEEL DRIVE CONTROL

If front wheels do not engage and disengage or if new wheel drive control cable is installed, an adjustment is required.

1. Stop engine and pull wire off spark plug (Fig. 10).
2. Remove transmission cover (Fig. 16).
3. ADJUSTMENT (Fig. 18) — Loosen belt guide screw until cable conduit slides. Move handle-mounted wheel drive control to DISENGAGE detent. Move shift arm toward clamp screw and hold in place. Pull cable conduit to remove slack and tighten belt guide screw.
4. Reinstall transmission cover.

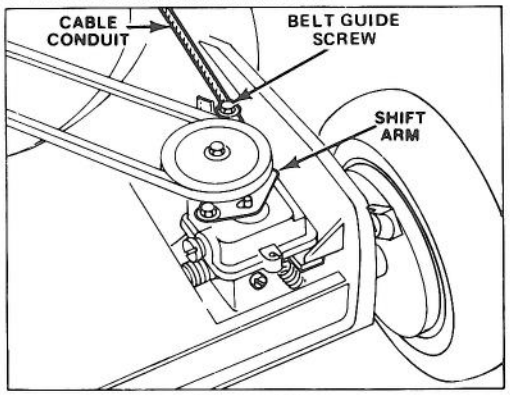

Figure 18

MAINTENANCE

ADJUSTING BLADE BRAKE

Whenever a new blade brake cable assembly is installed, an adjustment is required.

1. Stop engine and pull wire off spark plug (Fig. 10).

2. CHECK ADJUSTMENT (Fig. 19) — Move control bar toward handle until slack in wire is removed. Gap between brake lever and handle must be 1/8" - 3/16". See step 3 for adjustment.

3. ADJUST CABLE CONDUIT — Loosen nut on cable bracket (Fig. 19). Insert 1/8" - 3/16" object between brake lever and handle. Pull down on cable conduit until slack is removed. Then tighten nut.

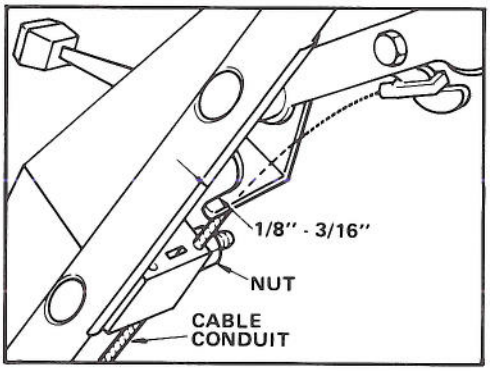

Figure 19

PREPARING MOWER FOR STORAGE

1. Drain fuel: refer to Draining Fuel, page 7. Then start engine and let it idle until all fuel is consumed and engine stops. If fuel is not drained completely, gum-like varnish deposits will form and cause poor engine operation, even starting problems.

2. Remove spark plug and pour 2 teaspoons of Toro two-cycle oil into hole in cylinder. Pull starter rope slowly to coat inside of cylinder. Install spark plug and tighten to 10 ft-lb (13.6 N·m). DO NOT INSTALL WIRE ON SPARK PLUG.

3. Clean underside of housing: refer to Cleaning Mower Housing, page 7.

4. Check condition of blade: refer to Inspecting/Removing/Sharpening Blade, page 8.

5. Tighten all nuts, bolts and screws.

6. Clean dirt and chaff from cylinder, cylinder head fins and blower housing. Also remove grass clippings, dirt and grime from external parts of the engine, shrouding and top of mower housing.

7. Check transmission oil: refer to Checking Transmission Oil Level, page 9.

8. Touch up all rusted or chipped paint surfaces. Toro Re-Kote paint is available from an Authorized TORO Service Dealer.

9. Store mower in a clean dry place. Cover mower to keep it clean and protected.

OPTIONAL SPARK ARRESTOR — PART #81-0200

If a spark arrestor is required because of local, state or federal regulations, it may be purchased at your local Authorized TORO Service Dealer. If mower is operated on any California forest, brush or grass covered land without a properly operating spark arrestor, the operator is violating state law, Section 4442 Public Resources Code.

PRODUCT IDENTIFICATION

A model number and a serial number decal is located at rear of mower housing, near the discharge door. Always refer to specific numbers on this decal in correspondence or when replacement parts are needed.

TORO SERVICE SUPPORT

If help — concerning safety, set-up, operation and maintenance or troubleshooting — is ever needed, contact the local Authorized TORO Service Dealer or Distributor. Refer to the "Yellow Pages" for assistance. In addition to skilled service technicians, the dealer and distributor have factory approved accessories and replacement parts. Keep your TORO all TORO. Buy genuine TORO replacement parts and accessories.