FORM NO. 3320-563

TORO®

MODEL NO. 26626 - 0000001 & UP

OPERATOR'S MANUAL

21" (0.53 M) SP 4-in-1 REAR BAGGER

KEY-LECTRIC® START

⚠ SAFETY INSTRUCTIONS

This mower "meets or exceeds CPSC blade safety requirements for walk behind rotary mowers" and the B71.1-1986 specifications of the American National Standards Institute. However, improper use or maintenance by the operator or owner can result in injury. To reduce the potential for injury, comply with these safety instructions and always pay attention to the safety alert symbol. Failure to comply with these instructions may result in personal injury.

BEFORE OPERATING

1. Read this manual carefully before operating the mower. Become familiar with the controls and proper use of the mower. Never allow children to operate the mower or adults to operate it without proper instructions.

2. Keep everyone, especially children and pets, away from area of operation. Thoroughly inspect area where mower will be used and remove sticks, stones, wire, and debris.

3. Wear long pants and substantial shoes. Do not operate mower while wearing open sandals or when barefoot.

4. Check fuel level before starting engine. Do not fill fuel tank indoors, when the engine is running, or until engine cools for several minutes after running. Wipe up spilled gasoline before starting engine.

5. Keep all guards, shields, and safety devices in place. Repair or replace defective or damaged parts.

6. Traction drive and blade are designed to stop when control bar is released. Assure control and brake function properly before each use of mower.

WHILE OPERATING

7. Do not run engine indoors.

8. Always maintain secure footing. Keep a firm grip on the handle and walk; never run. Never operate mower in wet grass. Mow only in daylight or in good artificial light.

9. Mow across the face of slopes; never up and down. Use extreme caution when changing direction on slopes. Do not mow excessively steep slopes.

10. Always wear safety glasses or eye shields during operation to protect eyes from foreign objects that may be thrown from the machine. Keep face, hands, and feet away from the mower housing and cutter blade when the engine is running. Stay behind the handle until the engine stops and keep clear of discharge opening at all times.

11. When mulching, assure discharge door is closed. When bagging grass, stop engine before the bag is removed and emptied.

12. Shut engine off and wait for all moving parts to stop before unclogging chute.

13. Since the blade rotates for a few seconds after the blade control is released, stay behind the handle until all moving parts stop.

©The Toro Company-1989

⚠ SAFETY INSTRUCTIONS

14. After striking a foreign object or if mower vibrates abnormally, stop engine and remove wire from spark plug. Check mower for damage and make all repairs before using mower again.

15. Stop the engine before adjusting the height-of-cut.

16. Stop the blade when crossing a gravel driveway, road, or sidewalk.

17. Stop engine before leaving the operator's position—behind the handle. Disconnect wire from spark plug if mower will be unattended.

18. Do not touch engine while it is running or shortly after it is stopped because engine will be hot enough to cause a burn.

MAINTENANCE

19. Perform only those maintenance instructions described in this manual. If major repairs are ever needed or if assistance is desired, contact your local Authorized TORO Service Dealer.

20. Before mower is cleaned, inspected, serviced, or adjusted, stop engine and disconnect high tension wire from spark plug. Keep wire away from plug to prevent accidental starting.

21. To assure the mower is in safe operating condition, frequently check and keep all nuts, bolts, and screws tight. Assure blade nuts are tightened to 25-33 ft-lb.

22. To reduce fire hazard, keep engine free of excessive grease, grass, leaves, and accumulations of dirt.

23. Check grass catcher bag frequently for wear or deterioration. Replace with a new bag for your protection.

24. Allow engine to cool before storing mower in any enclosure. Do not store mower near any open flame or where gasoline fumes may be ignited by a spark.

25. Do not overspeed the engine by changing governor settings.

26. At the time of manufacture, the mower conformed to the safety standards in effect for rotary mowers. To assure optimum performance and continued safety certification of the mower, use genuine TORO replacement parts and accessories. Replacement parts and accessories made by other manufacturers may result in non-conformance with the safety standards, and that could be dangerous.

⚠ SAFETY DECALS

Safety decals and instructions are easily visible to the operator and are located near any area of potential danger. Replace any decal that is damaged.



ON MOWER HOUSING
(Part No. 43-8480)



ON MOWER DECK
(Part No. 46-7370)

SAFETY DECALS

Safety decals and instructions are easily visible to the operator and are located near any area of potential danger. Replace any decal that is damaged.



ON DISCHARGE DOOR
(Part No. 63-9050)

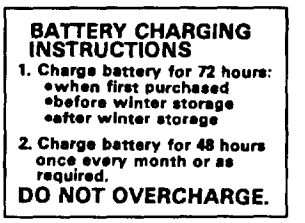

ON BATTERY
(Part No. 55-8190)

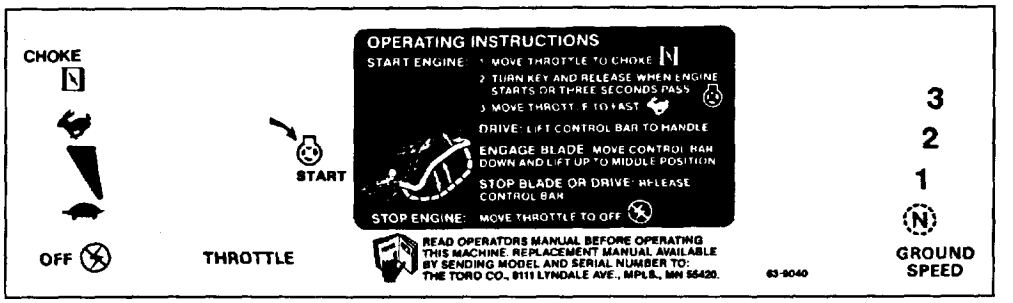

ON CONTROL PANEL
(PART NO. 63-9040)



ON REAR OF CONTROL PANEL
(PART NO. 63-9060)

TABLE OF CONTENTS

	Page
Set-Up Instructions	4
Before Operating	5–6
Operating Instructions	6–10
Maintenance	10–17
Servicing Air Cleaner	10
Replacing Spark Plug	10
Draining Gasoline	11
Changing Crankcase Oil	11
Adjusting Throttle	11
Adjusting Wheel Drive	11–12
Inspecting/Removing/Sharpening Blade	12–13
Lubrication	13
Adjusting Blade Brake	13–14
Charging Battery	14–15
Cleaning Blade Brake Clutch Shields	15–16
Cleaning Mower Housing	16–17
Preparing Mower For Storage	17
Optional Equipment	18
Product Identification	18
Toro Service Support	19
Maintenance Record	19

SET-UP INSTRUCTIONS

INSTALL HANDLE, BAG, AND BATTERY

1. Spread handle ends and slide onto mower housing mounting studs (Fig. 1).

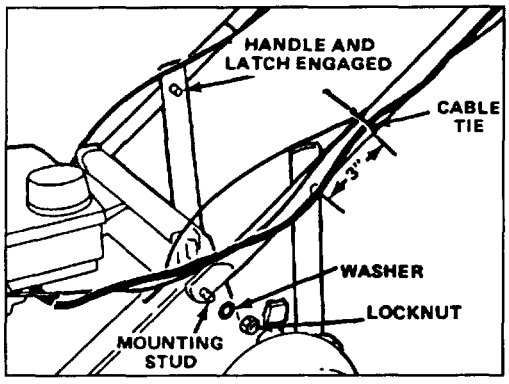

Figure 1

2. Secure each side of handle to mounting studs with a washer and locknut (Fig. 1).

3. Spring handle latches inward. Move handle up or down to snap handle studs into middle hole on both latches (Fig. 1).

4. Handle height may be adjusted to desired position by moving handle studs to one of the other holes in handle latches.

5. Secure control cables to each side of handle approximately 3" above handle stud with cable tie (Fig. 1).

6. To install grass bag, raise discharge door and hook bag frame onto hinge pins (Fig. 2). Allow bag to rest on mower housing over discharge opening. Close door and make sure it seals around top of bag opening (Fig. 3).

7. Charge battery—Refer to Charging Battery, page 14. Slide battery, decal side up, between mounting tabs on back of control panel and connect wires (Fig. 4). Insert key into switch when ready to start engine.

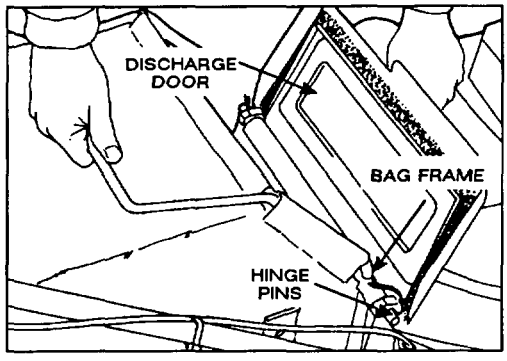

Figure 2

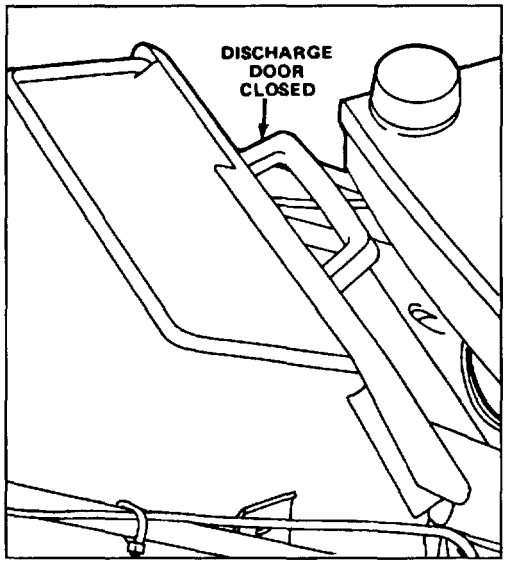

Figure 3

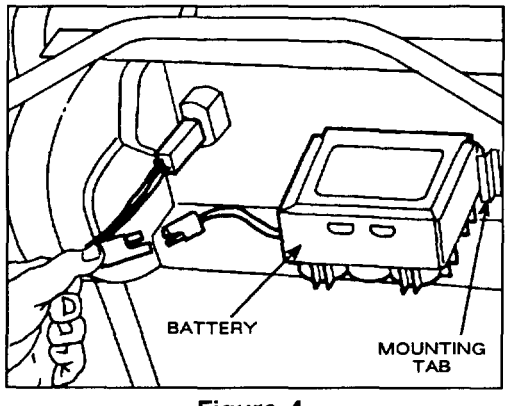

Figure 4

BEFORE OPERATING

FILL CRANKCASE WITH OIL

Initially, crankcase must be filled with 18 ounces (0.532 l) of SAE 10W30 oil. Use any high quality detergent oil having the American Petroleum Institute (API) "service classification"—MS, SC, SD, SE, or SF.

Before each use, assure oil level is between ADD and FULL marks on dipstick (Fig. 5). Add oil if level is low.

1. Position mower on level surface and clean around oil dipstick.

2. Remove dipstick by rotating cap counterclockwise 1/4 turn.

3. Wipe dipstick and insert it into filler neck. Rotate cap clockwise 1/4 turn. Then remove dipstick and check level of oil (Fig. 5). If level is low, add only enough oil to raise level to FULL mark on dipstick. **DO NOT FILL ABOVE FULL MARK BECAUSE ENGINE COULD BE DAMAGED WHEN STARTED. POUR SLOWLY.**

4. Insert dipstick into filler neck and rotate cap clockwise 1/4 turn to lock.

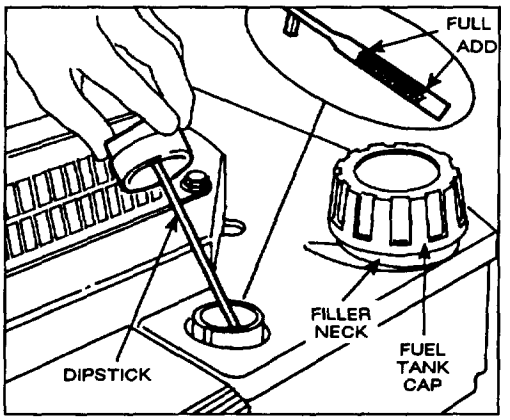

Figure 5

Note: Check oil level each time mower is used or after every 5 operating hours. Initially, change oil after the first 2 hours of operation; thereafter, change oil after every 25 hours of operation. More frequent oil changes are required in dusty or dirty conditions.

WARNING

DANGER: Gasoline is extremely flammable and explosive under certain conditions. Do not smoke when handling fuel and keep fuel far away from open flames and sparks. Never buy more than a 30 day supply of gasoline. Store it in an approved container. Keep gasoline out of reach of children.

Refuel outdoors and only when engine is cold. Do not fill the tank full. Fill tank to 1/4" (6 mm) below the bottom of the filler neck, not into the filler neck. This space is for expansion of fuel. Use funnel or spout to prevent spilling. Wipe up any spilled gas.

FILL FUEL TANK WITH GASOLINE

Note: The Toro Company strongly recommends the use of fresh, clean, UNLEADED regular grade gasoline in Toro gasoline powered products. Unleaded gasoline burns cleaner, extends engine life, and promotes good starting by reducing the build-up of combustion chamber deposits. Leaded gasoline can be used if unleaded is not available.

1. Clean around fuel tank cap and remove cap from tank (Fig. 5). Using unleaded gasoline, add fuel to 1/4" (6 mm) from bottom of filler neck. Do not fill the tank full.

2. Install fuel tank cap and wipe up any spilled gasoline.

BEFORE OPERATING

IMPORTANT: Do not mix oil with the gasoline. Never use methanol, gasoline containing methanol, gasohol containing more than 10% ethanol, premium gasoline, or white gas because engine fuel system damage could result.

Do not use fuel additives other than those manufactured for fuel stabilization during storage (such as Toro's Preservit or a similar product). Additives should not be used to try to enhance the power or performance of machine.

OPERATING INSTRUCTIONS

OPERATING TIPS

1. CHECK OIL LEVEL—Maintain oil level between ADD and FULL marks as shown on dipstick (Fig. 5).
2. BEFORE EACH MOWING—Assure blade brake, self-propelled drive, and control bar function properly. When control bar is released blade and self-propelled drive are designed to stop.
3. CUTTING AND BAGGING—Best results are achieved when engine is running at maximum speed and only about 1/3 of the grass blade is cut. If long grass must be cut, use highest height-of-cut setting for first mowing. Then recut the grass at a more normal setting. If too long of grass is cut, mower may plug and cause engine to stall. When cutting in dry, dusty conditions move the throttle to a slower speed to reduce the amount of dust generated by mower.
4. MULCHING—In summer when grass grows slower and is drier, mulch by removing the grass bag and closing the discharge door (Fig. 6).
5. SHARP BLADE—Begin each cutting season with a sharp blade. Periodically file down nicks.

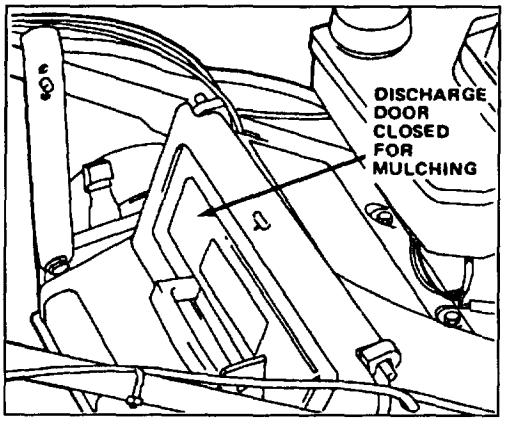

Figure 6

STARTING, STOPPING, AND SELF-PROPELLING

1. CONTROLS—Key switch, throttle, ground speed control, and blade/self-propelled control bar are on upper handle (Fig. 7). Recoil starter is on top of engine.

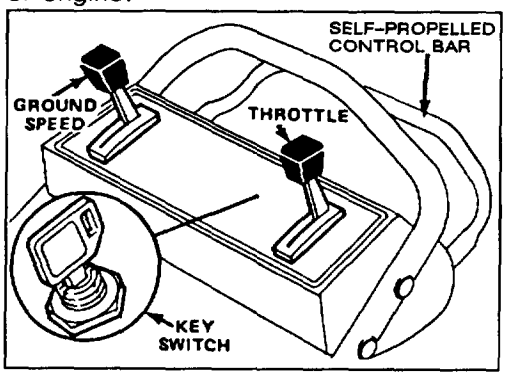

Figure 7

2. Push spark plug wire onto spark plug (Fig. 8).

OPERATING INSTRUCTIONS

3. Move ground speed control to "N" (Fig. 7).

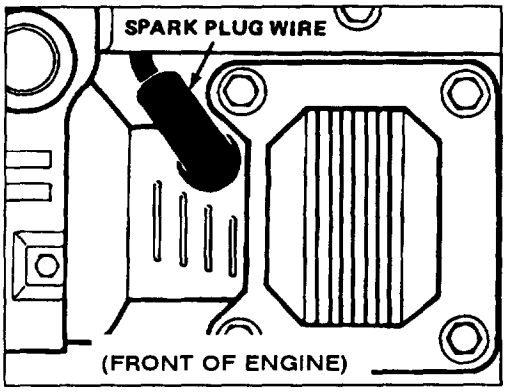

Figure 8

4. KEY-LECTRIC STARTING—Move throttle (Fig. 7) to CHOKE. Turn key (Fig. 7) to START and release when engine begins running. Regulate throttle as desired. If the battery's charge is too weak to start the engine, the engine can be started with the recoil starter (Fig. 9).

5. MANUAL STARTING—Move throttle to CHOKE. Brace yourself and mower securely by placing your foot on the top left side of mower housing where it says "PLACE FOOT HERE WHEN STARTING". Pull engine mounted recoil starter out until positive engagement results; then pull vigorously to start the engine (Fig. 9). Regulate throttle as desired when engine starts.

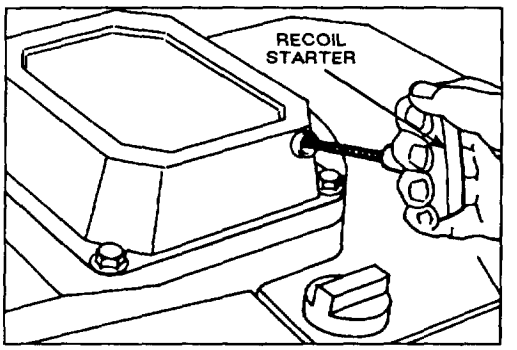

Figure 9

6. GROUND SPEED (Fig. 7)—Move ground speed control to desired setting. Number "1" is slow, "2" is medium, and "3" is a fast walking pace. Move ground speed control to "N" when using the mower for trimming and whenever leaving mower.

7. BLADE AND TRACTION OPERATION (Fig. 10)—Move control bar down to "A" and raise to "B" to engage blade. Squeeze control bar against handle "C" to drive. Ground speed varies, depending on space between control bar and handle. To disengage traction drive but keep blade engaged, gradually release control bar to mid position. To self-propel with blade disengaged, simply squeeze control bar against handle, eliminating downward movement necessary for blade engagement.

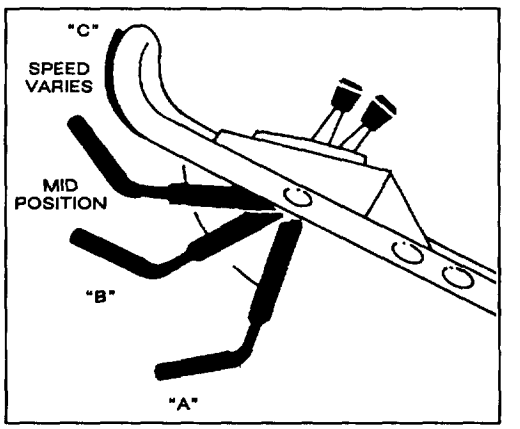

Figure 10

Note: The drive wheels are equipped with freewheeling clutches which enable the mower to be pulled rearward easier when the wheel drive is disengaged. To disengage the clutches, mower must be pushed forward at least 1" after wheel drive operation has stopped.

8. STOPPING (Fig. 7)—Release control bar to stop blade and traction drive. Move ground speed control to "N". To stop engine, move throttle to OFF. Remove key from switch and pull wire off spark plug if mower is unattended or not used (Fig. 8).

OPERATING INSTRUCTIONS

USING GRASS BAG

1. Stop engine and wait for all parts to stop.

2. INSTALLING BAG—Raise discharge door and hook bag frame onto hinge pins (Fig. 11). Allow bag to rest on mower housing over discharge opening. Close door and make sure it seals around top of bag opening.

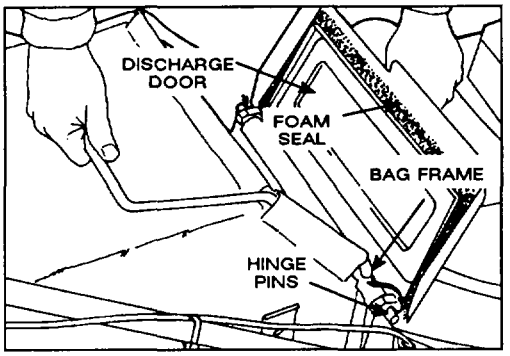

Figure 11

3. CHECKING BAG—To see if grass bag is full, release control bar and wait for blade to stop. Feel the bag to determine whether bag needs to be emptied.

⚠ CAUTION

Never open discharge door on mower when grass bag is not installed and engine is running because grass clippings and other debris discharge with enough force to cause injury.

The grass bag material will catch and contain the majority of foreign objects such as small stones and other similar debris. The bag material, however, is subject to normal wear and deterioration. So check the bag frequently, and if it is worn, install a new genuine TORO replacement bag that has this or similar warning.

4. REMOVING BAG—Stop engine and wait for all moving parts to stop. For protection, always keep hands and feet away from mower housing when engine is running. Open discharge door. While holding discharge door, grasp handle on grass bag and lift bag off mower. Allow discharge door to close.

5. EMPTYING BAG—Grasp bag frame handle and rear of bag. Gradually raise rear of bag while shaking bag to empty.

Note: If grass bag is overfilled, some clippings may remain in discharge opening when bag is removed. Normally, these clippings will be blown into grass bag when the bag is reinstalled and the blade is engaged.

DANGER: If the discharge opening remains plugged, be sure to stop engine and wait for all moving parts to stop before attempting to clear any clippings from the mower.

ADJUSTING HEIGHT-OF-CUT

Three numbers cast into the housing represent the height-of-cut settings. The diamond between each number represent 1/2" increments.

⚠ DANGER

Do not adjust the height-of-cut settings when engine is running.

1. Stop the engine.

2. For easier adjustment, lift housing up so wheel is off ground. Squeeze adjusting lever toward wheel and move to desired setting (Fig. 12). Assure pin on adjusting lever engages notch in housing. Adjust all wheels to the same setting.

Note: Front wheels can be adjusted to 1/2". Move adjusting lever past "1" and release pin into notch in housing.

3. In conditions when maximum power is required or when cutting in spongy thatch that causes rear wheels to sink in turf, raise rear wheel setting one increment higher. Make sure wheel settings are returned to equal settings, when cutting in normal conditions, to achieve the best quality of cut.

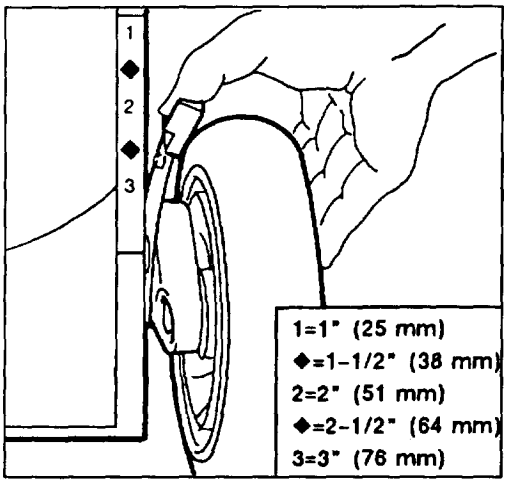

Figure 12

CHECK CONTROL BAR OPERATION

Control bar should be checked periodically, at the beginning of each mowing season as a minimum, to assure the Blade Brake Clutch (BBC) system is operating properly.

1. Start engine; refer to Starting, page 6.

2. Push the control bar down to the lowest position (Fig. 13). This "latches" the mechanism prior to engaging the blade.

3. Lift the control bar to the normal "blade engaged" position, about 2" below the handle. The "fan" noise and bag inflation indicate that the mower blade is engaged and rotating.

4. Release the control bar. A "bang" should be heard, and the blade should stop within 3 seconds. If the blade does not stop within 3 seconds when the control bar is released, stop using it until it has been serviced by an Authorized TORO Service Dealer.

If your unit stops within the required 3 seconds, the BBC system is operating properly. However, to detect BBC system deterioration before it affects normal operation, proceed to step 5.

5. If necessary, start engine.

6. Push the control bar down to its lowest position, latching the mechanism (Fig. 13).

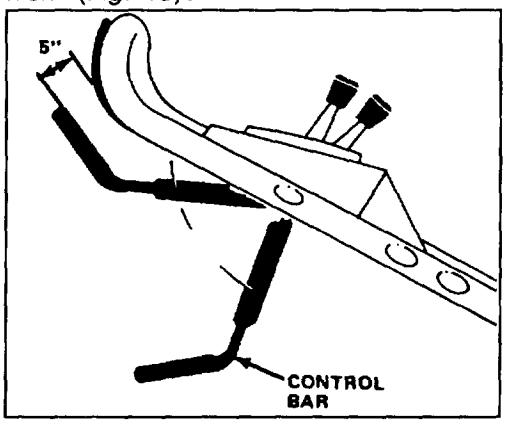

Figure 13

7. Slowly lift the control bar to a point where the bag just begins to inflate (about 5" below the handle) (Fig. 13). This indicates that the mower blade is engaged and has begun to rotate.

Note: This intermediate position is not the "natural" operating position of the control bar. However, it has proven to be useful in early detection of latent BBC sticking which could create an unsafe condition later in the life of the mower.

8. Release the control bar.

Note: If a "bang" is heard and the bag immediately deflates, the control bar had been raised too far. Repeat steps 6, 7 & 8, but do not raise the handle as high as in step 8.

If the control bar "hangs up" and the blade does not stop quickly, it indicates possible deterioration has set in, which could result in an unsafe operating condition. Have mower inspected by an Authorized TORO Service Dealer.

• **CAUTION:** If the control bar "hangs up", and the blade does not stop quickly, you should stop the blade before shutting off the engine. This can be done by raising the control bar to the normal operating position and releasing it.

MAINTENANCE

⚠ CAUTION

Pull wire off spark plug before performing adjustments or maintenance.

SERVICING AIR CLEANER

Normally, clean air cleaner after every 25 operating hours. More frequent cleaning is required when mower is operated in dusty or dirty conditions.

1. Stop engine. Pull wire off spark plug and remove key from switch.
2. Push in locking tabs and lift off air cleaner cover. Clean cover thoroughly (Fig. 14).

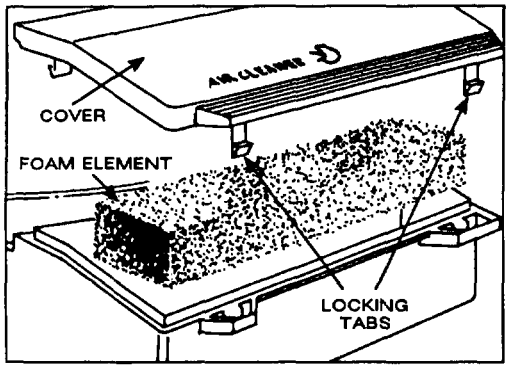

Figure 14

3. If top of foam element is dirty, remove it from air cleaner body (Fig. 14). Clean thoroughly.

A. WASH foam element in a solution of liquid soap and warm water. Squeeze to remove dirt, but do not twist because foam may tear. Rinse thoroughly in clear water.

B. DRY by wrapping in a clean rag. Squeeze rag and foam element to dry.

C. SATURATE element with 5 teaspoons (25 ml) of SAE 10W30 engine oil. Squeeze element to remove excess oil and to distribute oil thoroughly. A damp element is desirable.

4. Reinstall foam element and air cleaner cover.

IMPORTANT: Do not operate engine without air cleaner element because extreme engine wear and damage will likely result.

REPLACING SPARK PLUG

Use an NGK BPR6ES spark plug or equivalent. Correct air gap is 0.032" (0.813 mm). Remove plug after every 25 operating hours and check its condition.

1. Stop engine and pull wire off spark plug.
2. Clean around spark plug and remove plug from cylinder head.

IMPORTANT: Replace a cracked, fouled, or dirty spark plug. Do not sand blast, scrape, or clean electrodes because engine damage could result from grit entering cylinder.

3. Set air gap at 0.032" (0.813 mm) (Fig. 15). Install correctly gapped spark plug and gasket seal. Tighten plug firmly to 15 ft-lb (20.4 N·m).

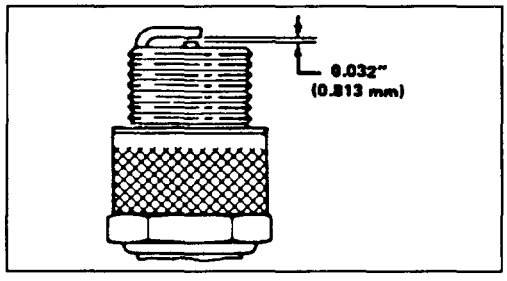

Figure 15

MAINTENANCE

DRAINING GASOLINE

1. Stop engine. Pull wire off spark plug and remove key from switch.
2. Remove cap from fuel tank and use pump-type syphon to drain fuel into clean gas can.

Note: This is the only procedure recommended for draining fuel.

CHANGING CRANKCASE OIL

Change oil after the first 2 operating hours and after every 25 hours thereafter. Since warm oil drains better and carries more contaminants than cold, run engine for a minute or so before draining oil.

1. Stop engine. Pull wire off spark plug and remove key from switch.
2. Remove grass bag. Drain gasoline from fuel tank: refer to Draining Gasoline, page 11.
3. Raise left side of mower at least 12 inches. Remove drain plug using a 14mm wrench. Insert oil drain tube over drain opening (Fig. 16).

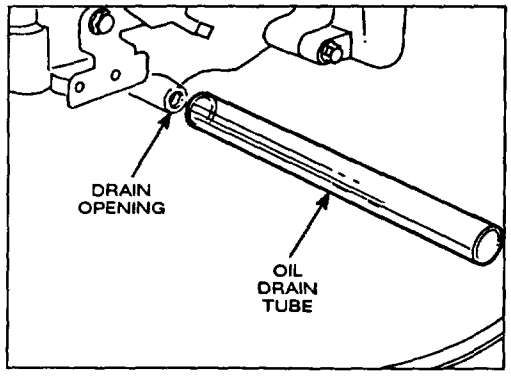

Figure 16

4. Place a drain pan at left side of mower. Lower mower allowing oil to drain into pan. Raise right side of mower until all oil has flowed into drain pan.
5. After draining, install drain plug and fill engine with fresh oil: refer to Fill Crankcase With Oil, page 5.

ADJUSTING THROTTLE

Throttle control adjustment may be required if engine does not start or stop. Whenever a new throttle control cable is installed, throttle must be adjusted.

1. Stop engine. Pull wire off spark plug and remove key from switch.
2. Move throttle control to FAST (Fig. 7).
3. Loosen cable clamp screw until throttle cable slides (Fig. 17). Align holes in throttle lever and throttle bracket. Tighten cable clamp screw to lock adjustment in place.

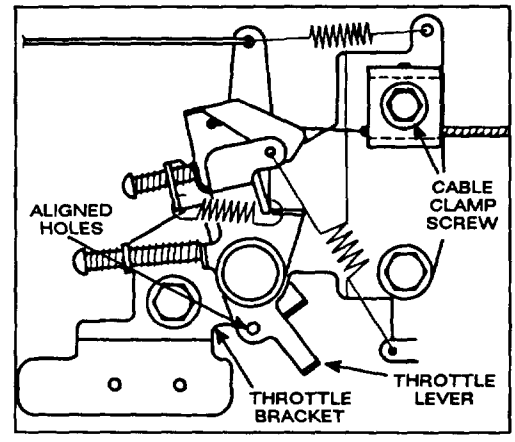

Figure 17

ADJUSTING WHEEL DRIVE

If mower does not self-propel or has a tendency to creep forward when drive is not engaged, an adjustment to the wheel traction control cable is necessary.

1. Stop engine. Pull wire off spark plug and remove key from switch.
2. Loosen bottom jam nut on wheel traction cable (Fig. 18).
3. Lift control bar until some resistance is felt. Control bar should be 1-1/2" from handle when properly adjusted (Fig. 19).
4. Move the top jam nut up to increase the distance between the control bar and handle. Move top jam nut down to decrease the distance between the control bar and the handle.

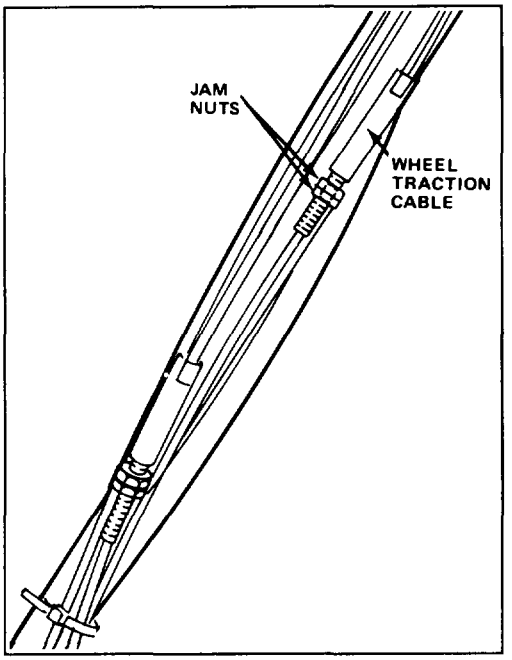

Figure 18

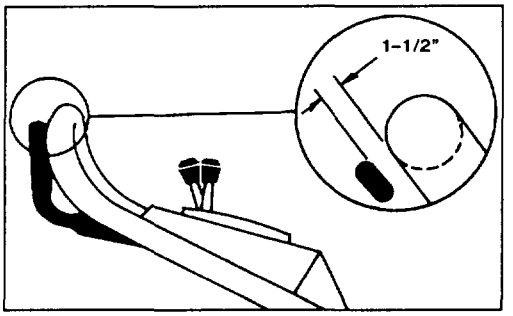

Figure 19

5. Repeat steps 2-4 until properly adjusted.

INSPECTING/REMOVING/SHARPENING BLADE

1. Stop engine. Pull wire off spark plug and remove key from switch.
2. Drain gasoline from fuel tank; refer to Draining Gasoline, page 11.
3. Tip mower on its right side (Fig. 20).

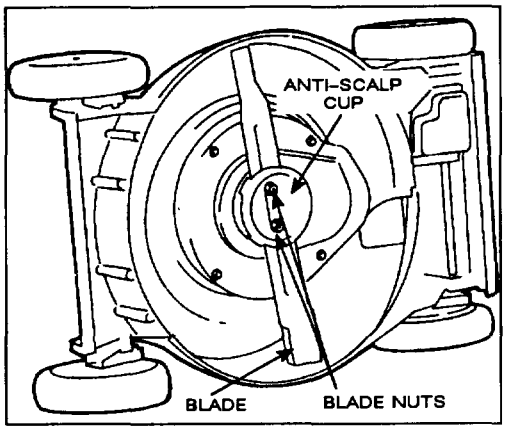

Figure 20

4. INSPECTING BLADE—Carefully examine blade for sharpness and wear, especially where flat and curved parts meet (Fig. 21A). Since sand and abrasive material can wear away the metal that connects the flat and curved parts of the blade, check blade before using the mower. If a slot or wear is noticed, (Fig. 21B & C), replace blade. Refer to step 5.

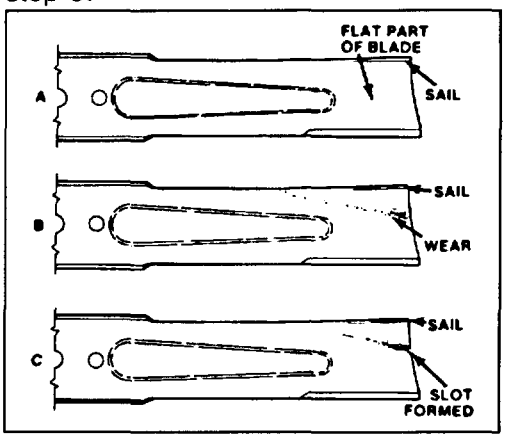

Figure 21

WARNING

If blade is allowed to wear, a slot may form near the sail. Eventually a piece of blade may break off resulting in serious injury to yourself or a bystander.

MAINTENANCE

5. REMOVING BLADE—Grasp end of blade using a rag or thickly padded glove. Remove blade nuts, anti-scalp cup, blade, blade spacer, and rotating screen (Figs. 20 & 22).

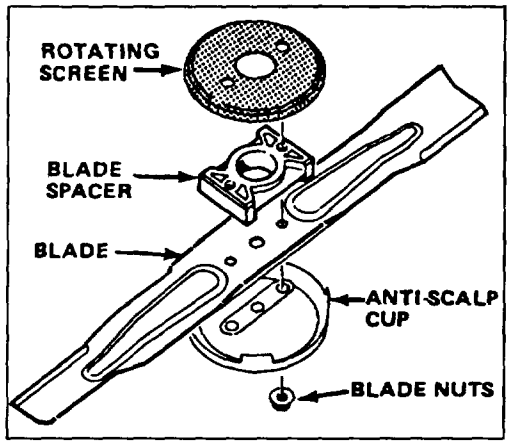

Figure 22

Note: For optimum performance, install new blade before cutting season begins. During the year, file down small nicks to maintain the cutting edge.

6. SHARPENING BLADE—Using a file, sharpen top side of blade (side facing mower housing) and maintain original cutting angle (Fig. 23). The blade will remain balanced if the same amount of material is removed from both cutting edges.

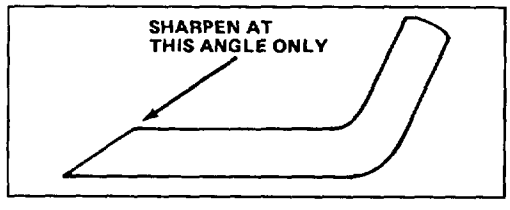

Figure 23

IMPORTANT: Check balance of blade by putting it on a blade balancer. An inexpensive balancer can be purchased at a hardware store. A balanced blade will stay in a horizontal position and an unbalanced blade will settle to the heavy side. If the blade is not balanced, file more metal off cutting edge on heavy end of blade.

7. Install rotating screen (outside flange pointing away from housing), blade spacer, sharp, balanced blade, and anti-scalp cup with blade nuts. Sail part of blade must point toward top of mower housing to assure correct installation. Tighten the blade nuts to 25-33 ft-lb.

LUBRICATION

After every 25 operating hours or when season ends, front and rear wheels must be lubricated.

1. Apply 2 or 3 drops of light oil on inside and outside of all wheel bolts. Spin wheels to distribute oil into bushings. Wipe up excess oil.

2. Move rear wheel height-of-cut levers to "2" setting. Wipe grease fittings with clean rag (Fig. 24). Install grease gun onto fitting and gently apply two or three pumps of #2 Multi-Purpose Lithium Base Grease.

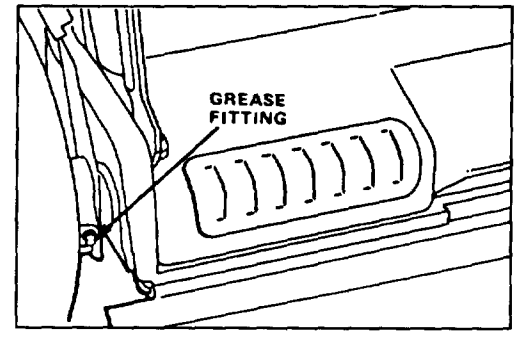

Figure 24

ADJUSTING BLADE BRAKE

Blade brake adjustment may be necessary if the quality of cut deteriorates, the bagging ability degrades, or the engine rpm is audibly faster than the blade rpm when cutting grass.

1. Stop engine. Pull wire off spark plug and remove key from switch.

2. Remove (2) screws securing screen panel to top of mower housing (Fig. 25). Remove panel.

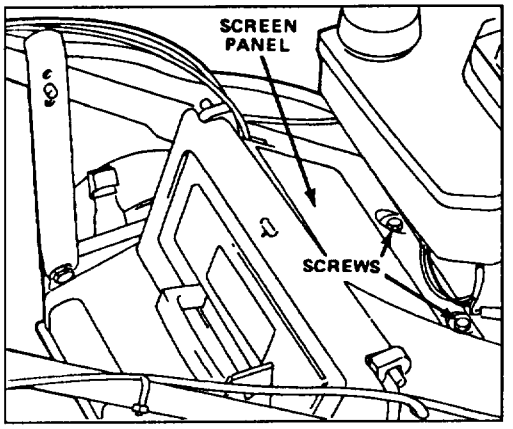

Figure 25

3. Move control bar down and lift up against handle. With control bar against handle, measure spring length (L) at the front of the spring as shown in figure 26.

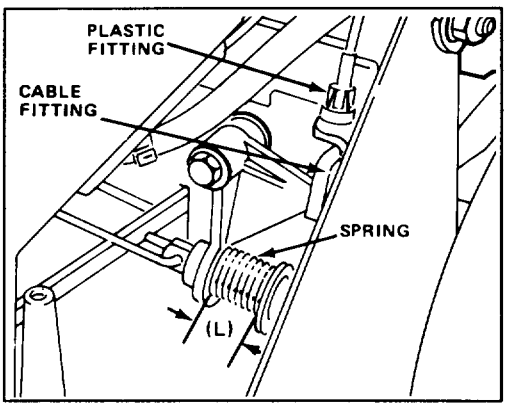

Figure 26

4. If spring dimension is greater than 1-1/4" or less than 1", an adjustment is needed.

5. To adjust, loosen bottom jam nut on blade brake cable (Fig. 27) and adjust top jam nut until spring dimension is as near as possible to but not less than 1". (See note below.)

NOTE: Adjusting the top jam nut too high can cause the cable end to crush the platic fitting whne the control bar is moved up against the handle. If the spring cannot be adjusted to less than 1-1/4" before the cable end contacts the plastic fitting, the clutch belt is worn out and should be replaced. After replacing belt, adjust cable as explained in the above procedure.

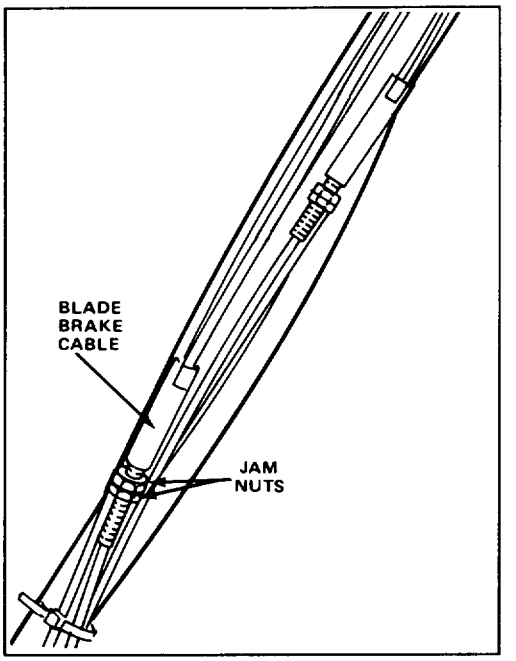

Figure 27

6. Tighten bottom jam nut to lock the adjustment in place.

CHARGING BATTERY

Although a new battery is not fully charged, a partial charge of 4 hours provides enough energy for several starts. However, a new battery must be charged for 72 continuous hours to assure full charge. Also charge battery for 72 hours when mower is stored and in the spring. During normal operation, engine alternator keeps battery charged.

1. Stop engine and disconnect wire harness from battery terminal (Fig. 28).

2. If desired, battery can be removed by sliding it out of mounting tabs. However, removal is not required if mower can be positioned near an electrical outlet.

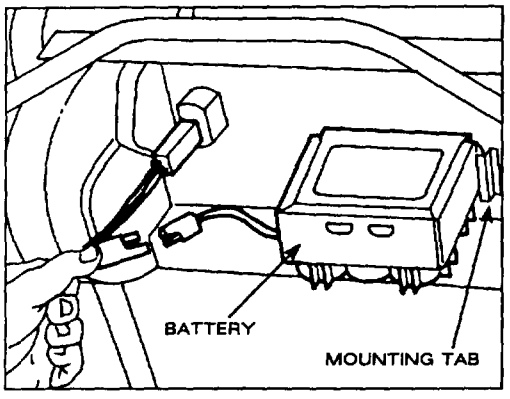

Figure 28

3. Connect TORO electro charger to battery and plug into 120VAC power outlet. After charging battery for specified time, unplug charger and disconnect from battery.

4. Connect wiring harness to battery terminal.

IMPORTANT: Only the TORO electro charger is recommended because other chargers could damage the battery. Always use charger indoors and charge battery at room temperature (+70° F) whenever possible. Do not charge battery longer than 72 hours because damage could result.

CLEANING BLADE BRAKE CLUTCH SHIELDS

The BBC (Blade Brake Clutch) shield and the area behind the panel screen should be cleaned periodically, at the end of each mowing season at minimum, to assure optimum performance and to prevent parts degradation.

CLEANING BEHIND PANEL SCREEN

1. Stop engine. Pull wire off spark plug and remove key from switch.

2. Remove (2) 1/2" self tapping screws securing panel screen to mower deck and remove panel screen (Fig. 29).

Note: For easier access to panel screen screws, remove (2) self tapping screws from gas tank and move gas tank out of the way.

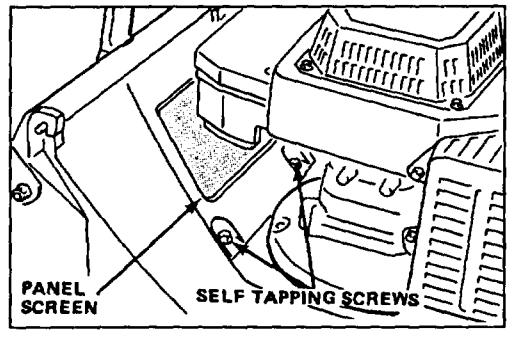

Figure 29

3. Remove the vertical panel in front of the transmission by pulling straight up (Fig. 30).

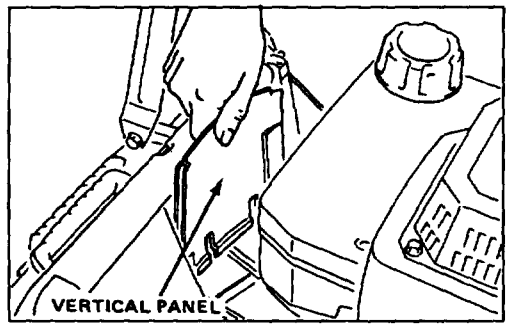

Figure 30

4. Remove any debris that may have accumulated in area behind panel (Fig. 31).

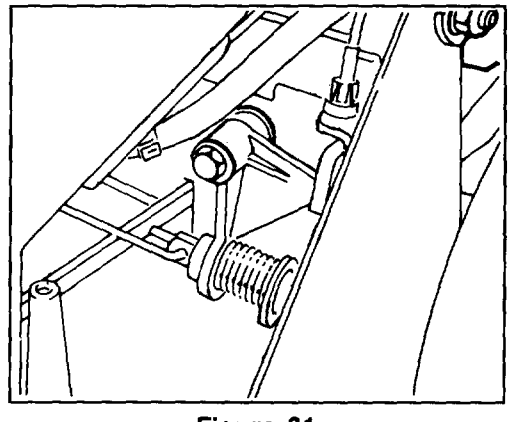

Figure 31

5. Reinstall vertical panel. Secure panel screen to mower deck with (2) 1/2" self tapping screws.

6. Reinstall spark plug wire.

CLEANING BLADE BRAKE CLUTCH SHIELD

1. Stop engine. Pull wire off spark plug and remove key from switch.

2. Drain gasoline from fuel tank; refer to Draining Gasoline, page 11.

3. Tip mower on its right side.

4. Remove (2) blade nuts, anti-scalp cup, blade, blade spacer, and (4) bolts securing BBC shield to mower deck (Figs. 32 & 33).

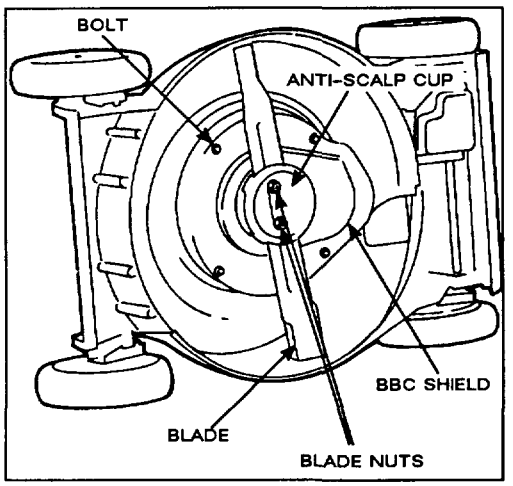

Figure 32

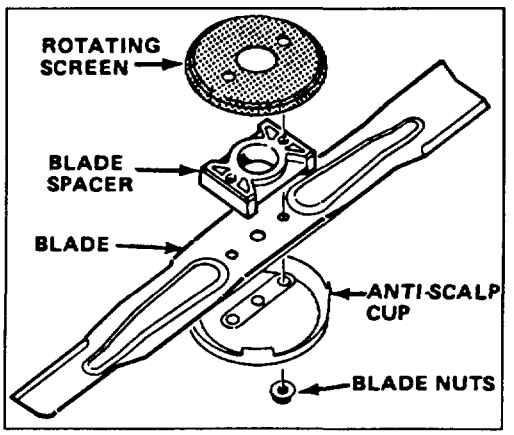

Figure 33

5. Brush or scrape debris from inside of shield.

6. Reinstall BBC shield using (4) bolts, blade spacer, blade, anti-scalp cup, and (2) blade nuts.

7. Reinstall spark plug wire.

CLEANING MOWER HOUSING

To assure optimum performance, keep underside of mower housing and inside of discharge area clean.

1. Stop engine. Pull wire off spark plug and remove key from switch.

2. Drain gasoline from fuel tank: refer to Draining Gasoline, page 11.

3. Tip mower on its right side (Fig. 34).

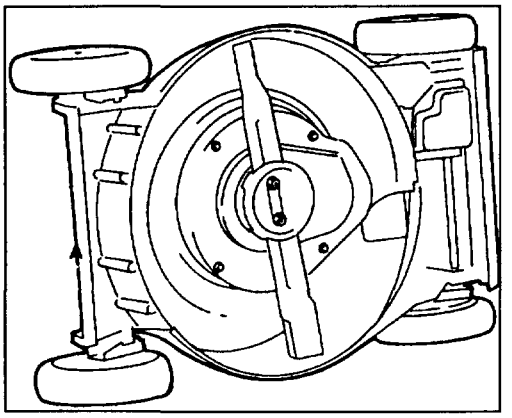

Figure 34

4. Remove dirt and grass clippings that stick to housing by spraying it with a garden hose. Scrape out remaining debris with hardwood scraper. Avoid burrs and sharp edges.

5. Clean discharge door and hinges of grass or debris that may impair operation of door. Use caution when cleaning door so you do not damage foam seal.

6. Remove screen panel on mower housing and clean around blade brake mechanism (Fig. 35 & 36).

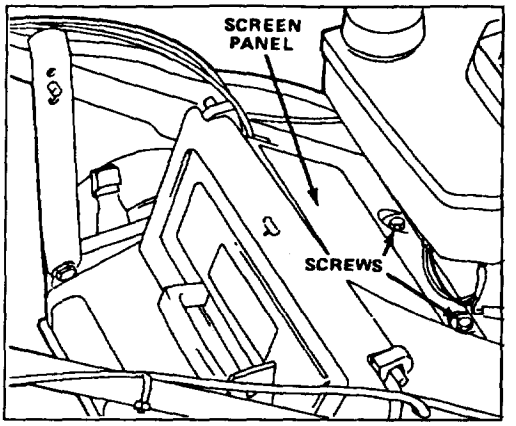

Figure 35

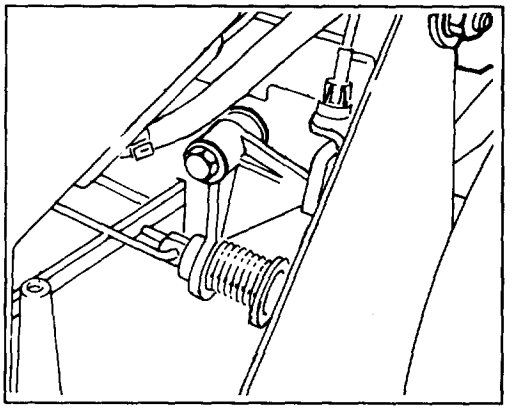

Figure 36

PREPARING MOWER FOR STORAGE

1. For long term storage, it is recommended that gasoline be drained from fuel tank; refer to Draining Gasoline, page 11. After fuel is drained, start engine and let it idle until all fuel is consumed and engine stops. If gasoline is not drained, gum-like varnish deposits will form and cause poor engine operation, even starting problems.

Fuel can be left in gas tank only if a fuel additive such as Toro's Preservit is added to gasoline before storing. Use fuel additive in recommended quantities as specified on container.

2. Drain oil: refer to Changing Crankcase Oil, page 11. After oil is drained, do not fill crankcase with oil until the following steps (3-11) are completed.

3. Remove spark plug and pour 2 tablespoons of SAE 10W30 oil into hole in cylinder. Pull starter rope slowly to coat inside of cylinder. Install spark plug and tighten to 15 ft-lb (20.4 N·m). **DO NOT INSTALL WIRE ON SPARK PLUG.**

4. Clean mower housing: refer to Cleaning Mower Housing, pages 16-17.

5. Clean BBC shields: refer to Cleaning Blade Brake Clutch Shields, pages 15-16.

6. Check condition of blade: refer to Inspecting/Removing/Sharpening Blade, pages 12-13.

7. Tighten all nuts, bolts, and screws.

8. Clean dirt and chaff from cylinder, cylinder head fins, and blower housing. Also remove grass clippings, dirt, and grime from external parts of the engine, shrouding, and top of mower housing.

9. Clean air cleaner: refer to Servicing Air Cleaner, page 10.

10. Lubricate the wheels: refer to Lubrication, page 13.

11. Touch up all rusted or chipped paint surfaces. Toro Re-Kote paint is available from an Authorized TORO Service Dealer.

12. Fill crankcase with oil: refer to Fill Crankcase With Oil, page 5.

13. Charge battery for 72 hours: refer to Charging Battery, pages 14-15.

14. Store mower in a clean, dry place. Cover mower to keep it clean and protected.

OPTIONAL EQUIPMENT

For special conditions the following accessories may be purchased at your local authorized TORO Service Dealer.

1. Side Discharge Kit, Model No. 59112—Installs in seconds. Rear mounted in place of the grass bag. Disperses clippings while trimming on both sides (Fig. 36).

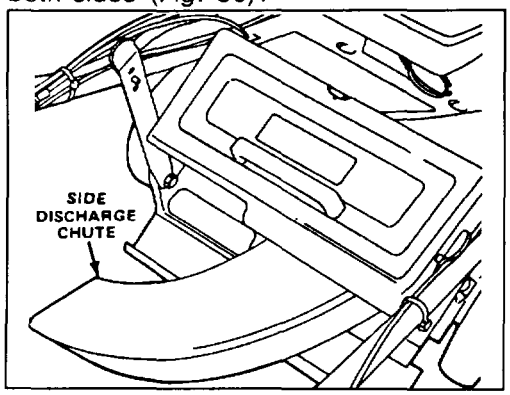

Figure 36

2. Dethatcher Kit, Model No. 59131—Installs in minutes. Front mounted for easy maneuverability. Spring tines loosen thatch for clean vacuuming into grass bag (Fig. 37) and convenient disposal.

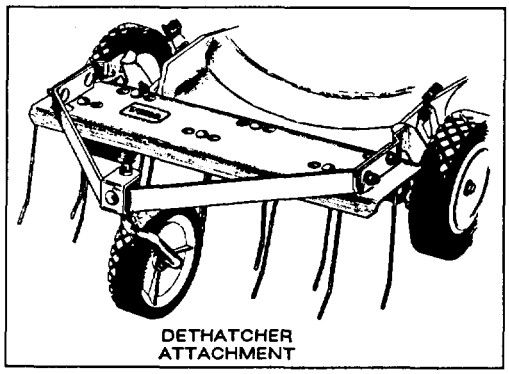

Figure 37

3. Leaf Shredder Kit, Model No. 59180—Installs on underside of mower in minutes without requiring removal of blade. Shreds leaves into small pieces for clean vacuuming into grass bag and convenient disposal (Fig. 38).

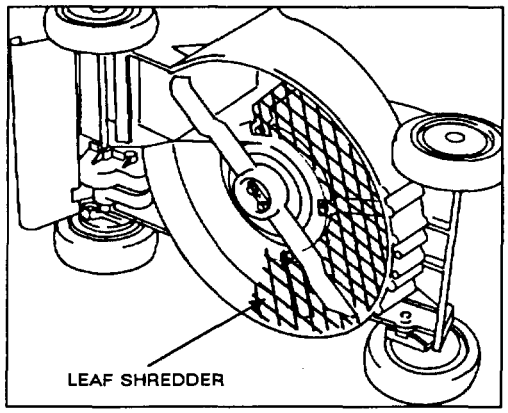

Figure 38

4. Spark Arrestor, Part No. 56-6730—If a spark arrestor is required because of local, state, or federal regulations, it may be purchased at your local Authorized TORO Service Dealer. If mower is operated on any California forest, brush, or grass covered land without a properly operating spark arrestor, the operator is violating state law, Section 4442 Public Resources Code.

PRODUCT IDENTIFICATION

A model and a serial number decal is located at rear of mower housing, near the discharge door. Always refer to specific numbers on this decal in correspondence or when replacement parts are needed.

TORO SERVICE SUPPORT

If help – concerning safety, set-up, operation, maintenance, or troubleshooting – is ever needed, contact the local Authorized TORO Service Dealer or Distributor. Refer to the "Yellow Pages" for assistance. In addition to skilled service technicians, the dealer and distributor have factory approved accessories and replacement parts. Keep your Toro all TORO. Buy genuine TORO replacement parts and accessories.

MAINTENANCE RECORD

Date	Hours Used	Oil Change	Air Cleaner Service	Lubrication	Spark Plug	Winter Storage


TORO