FORM NO. 3320-572

TORO

MODEL NO. 20212 - 1000001 & UP

OPERATOR'S MANUAL

18" (0.46 m) HP 3-in-1 REAR BAGGER

⚠ SAFETY INSTRUCTIONS

This mower meets or exceeds CPSC blade safety requirements for walk behind rotary mowers," and the B71.1-1986 specifications fo the American National Standards Institute. However, improper use or maintenance by the operator or owner can result in injury. To reduce the potential for injury, comply with these safety instructions and always pay attention to the safety alert symbol ⚠ . Failure to comply with the instruction may result in personal injury.

BEFORE OPERATING

1. Read this manual carefully before operating the mower. Become familiar with the controls and proper use of the mower. Never allow children to operate the mower or adults to operate it without proper instructions. Use mower for only the job it is intended.
2. Keep everyone, especially children and pets, away from area of operation. Thoroughly inspect area where mower will be used, and remove sticks, stones, wire, and debris.
3. Wear long pants and substantial shoes. Do not operate mower while wearing open sandals, jewelry, loose clothing or when barefoot.
4. Always wear safety glasses or eye shields during operation to protect eyes from foreign objects that may be thrown from the machine.
5. Check fuel level before starting engine. Do not fill fuel tank indoors, when the engine is running, or until engine cools for several minutes after running. Wipe up spilled gasoline before starting engine.
6. Keep all guards, shields, and safety devices in place. Repair or replace defective or damaged parts.
7. Engine and blade are designed to stop when control bar is released. Ensure control bar and brake function properly before each use of mower.

WHILE OPERATING

8. Do not run engine indoors.
9. Always maintain secure footing. Keep a firm grip on the handle and walk; never run. Never operate mower in wet grass. Mow only in daylight or in good artificial light.
10. Mow across the face of slopes; never up and down. Use extreme caution when changing direction on slopes. Do not mow excessively steep slopes.
11. Always wear safety glasses or eye shields during operation to protect eyes from foreign objects that may be thrown from the machine.
12. Keep face, hands, and feet away from the mower housing and cutter blade when the engine is running. Stay behind the handle until the engine stops and keep clear of discharge opening at all times.
13. When mulching, keep grass bag in place and ensure discharge door is closed. When bagging grass, stop engine and ensure chute door is closed before the bag is removed and emptied.
14. Shut engine off and wait for all moving parts to stop before unclogging chute.

©The Toro Company-1990

SAFETY INSTRUCTIONS

15. Since the blade rotates for a few seconds after the blade control is released, stay behind the handle until all moving parts stop.

16. After striking a foreign object or if mower vibrates abnormally, stop engine and remove wire from spark plug. Check mower for damage and make all repairs before using mower again.

17. Stop the engine before adjusting the height-of-cut.

18. Stop the blade when crossing a gravel driveway, road or sidewalk.

19. Stop motor before leaving the operator's position—behind the handle. Disconnect wire from spark plug if mower will be unattended.

20. Do not touch engine while it is running or shortly after it is stopped because engine will be hot enough to cause a burn.

MAINTENANCE

21. Perform only those maintenance instructions described in this manual. If major repairs are ever needed or if assistance is desired, contact your local Authorized TORO Service Dealer.

22. Before mower is cleaned, inspected, serviced, or adjusted, stop engine and disconnect wire from spark plug. Keep wire away from plug to prevent accidental starting.

23. To ensure the mower is in safe operating condition, frequently check and keep all nuts, bolts, and screws tight. Ensure blade bolt is tightened to 50 ft-lb (68 N·m).

24. To reduce fire hazard, keep engine free of excessive grease, grass, leaves, and accumulations of dirt.

25. Check grass catcher bag frequently for wear or deterioration. If worn, replace with a new bag for your protection.

26. Allow engine to cool before storing mower in any enclosure. Do not store mower near any open flame or where gasoline fumes may be ignited by a spark.

27. Do not overspeed the engine by changing governor settings.

28. At the time of manufacture, the mower conformed to the safety standards in effect for rotary mowers. To ensure best performance and continued safety certification of the mower, use genuine identical TORO replacement parts and accessories. Replacement parts and accessories made by other manufacturers may result in non-conformance with the safety standards, and that could be dangerous.

SAFETY SYMBOL GLOSSARY


Safety alert


Read and understand operator's manual


Engine speed (Throttle)


Choke on


Keep hands and feet away from rotating blade



Keep bystanders from mowing area


Keep all guards in place



Stop engine before leaving operator position


Never open chute door on mower when engine is running, unless grass bag or optional side discharge attachment is installed


Slow


Fast


Ignition on


Ignition off

TABLE OF CONTENTS

	Page
Set-Up Instructions	3
Before Operating	5
Operating Instructions	6
Maintenance	9
Servicing Air Cleaner	9
Replacing Spark Plug	10
Cleaning Mower Housing	10
Draining Gasoline	10
Changing Crankcase Oil	10
Inspecting/Removing/ Sharpening Blade	11
Lubrication	12
Adjusting Throttle Control	12
Adjusting Blade Brake	12
Preparing Mower For Storage	13
Product Identification	14
Toro Service Support	14

SET-UP INSTRUCTIONS

INSTALL HANDLE, BAG, ROPE GUIDE AND STARTER ROPE

1. LOWER HANDLE (Fig. 1)—Push ends of lower handle together and install on pivot pins. Move handle and latches backward until mounting holes align. Insert bolts through hole in handle latches and install handle knobs. Tighten securely. Ensure control cables are to the rear and inside of handle and are not in path of muffler exhaust (Fig. 2).

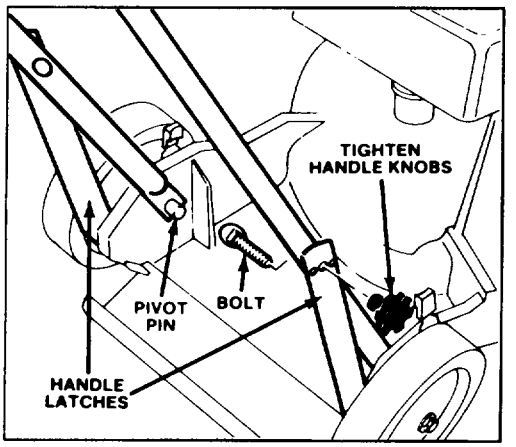

Figure 1

Note: Handle can be set in any of three positions, depending on operator height, by moving lower handle bolts into different holes on handle latches.

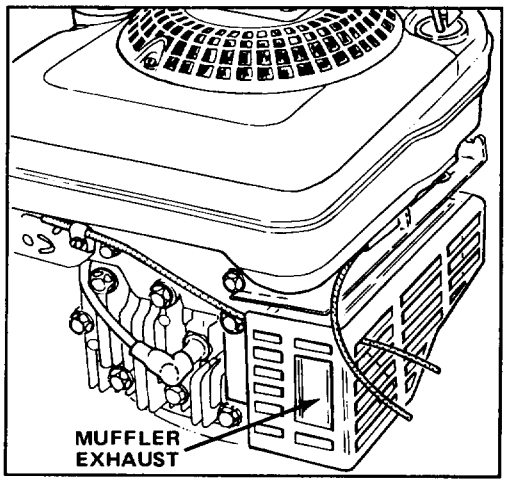

Figure 2

2. UPPER HANDLE (Fig. 3)—Position ends of upper handle on outside of lower handle. Secure upper and lower handles in place with handle bolts and nuts. Secure cables to lower handle with cable tie.

SET UP INSTRUCTIONS

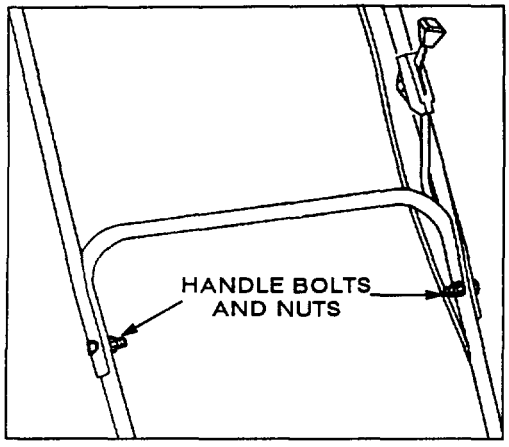

Figure 3

3. ATTACH CABLE TIES (Fig. 4)—Use a cable tie to secure control cables to lower handle 6 inches up from the handle knob. Secure the control cables to lower handle 3 inches below handle knob using the remaining cable tie.

4. ATTACH ROPE GUIDE—Secure rope guide to upper handle with a bolt and locknut (Fig. 5).

5. Pull starter rope through rope guide on handle (Fig. 5).

6. Install grass bag: refer to Using Grass Bag, pages 7–8, steps 1–4.

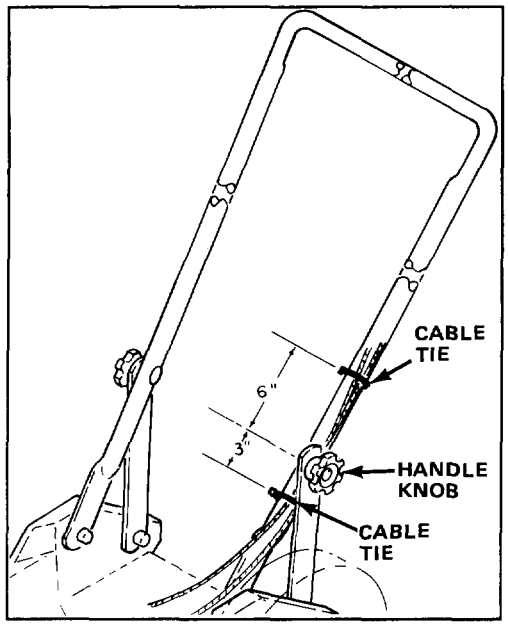

Figure 4

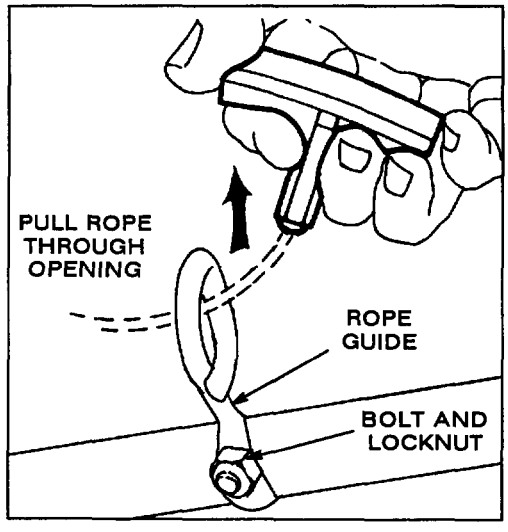

Figure 5

BEFORE OPERATING

FILL CRANKCASE WITH OIL (Fig. 6)

Initially, crankcase must be filled with 18 ounces (0.532 l) of SAE 10W30 oil. Use any high quality detergent oil having the American Petroleum Institute (API) "service classification"—MS, SC, SD, SE, or SF.

Before each use, ensure oil level is between ADD and FULL marks on dipstick. Add oil if level is low.

1. Position mower on level surface and clean around oil dipstick.
2. Remove dipstick by rotating cap counterclockwise 1/4 turn.
3. Wipe dipstick and insert it into filler neck. Rotate cap clockwise 1/4 turn. Then remove dipstick and check level of oil. If level is low, add only enough oil to raise level to FULL mark on dipstick. **DO NOT FILL ABOVE FULL MARK BECAUSE ENGINE COULD BE DAMAGED WHEN STARTED. POUR OIL SLOWLY.**
4. Insert dipstick into filler neck and rotate cap clockwise 1/4 turn to lock.

Note: Check oil level each time mower is used or after every 5 operating hours. Initially, change oil after the first 2 hours of operation; thereafter, change oil after every 25 hours of operation. More frequent oil changes are required in dusty or dirty conditions.

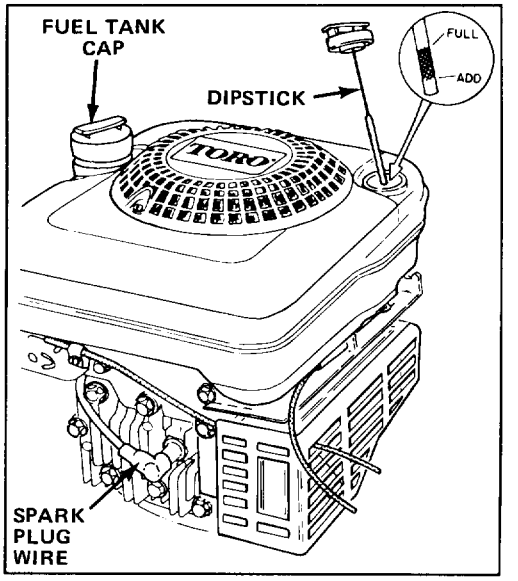

Figure 6

⚠ WARNING

DANGER: Gasoline is extremely flammable and explosive under certain conditions. Do not smoke when handling fuel and keep fuel far away from open flames and sparks. Never buy more than a 30 day supply of gasoline. Store it in an approved container. Keep gasoline out of reach of children.

Refuel outdoors and only when engine is cold. Fill tank to within 1/4" to 1/2" (6 to 13 mm) from its top, not to the top of the filler neck. This space is for expansion of fuel. Use funnel or spout to prevent spilling. Wipe up any spilled gas.

FILL FUEL TANK WITH GASOLINE

Note: The Toro Company strongly recommends the use of fresh, clean, UNLEADED regular grade gasoline in Toro gasoline powered products. Unleaded gasoline burns cleaner, extends engine life, and promotes good starting by reducing the build-up of combustion chamber deposits. Leaded gasoline can be used if unleaded is not available.

BEFORE OPERATING

Toro also recommends that Toro Stabilizer/Conditioner be used regularly in all Toro gasoline powered products during operation and storage seasons. Toro Stabilizer/Conditioner cleans the engine during operation and prevents gum-like varnish deposits from forming in the engine during periods of storage.

1. Clean around fuel tank cap and remove cap from tank (Fig. 6). Using unleaded gasoline, fill fuel tank to within 1/4" to 1/2" (6 to 13 mm) from top of tank.
2. Install fuel tank cap and wipe up any spilled gasoline.

IMPORTANT: DO NOT MIX OIL WITH THE GASOLINE. NEVER USE METHANOL, GASOLINE CONTAINING METHANOL, GASOHOL CONTAINING MORE THAN 10% ETHANOL, PREMIUM GASOLINE OR WHITE GAS BECAUSE ENGINE FUEL SYSTEM DAMAGE COULD RESULT.

DO NOT USE FUEL ADDITIVES OTHER THAN THOSE MANUFACTURED FOR FUEL STABILIZATION DURING STORAGE SUCH AS TORO'S STABILIZER/CONDITIONER OR A SIMILAR PRODUCT. TORO'S STABILIZER/CONDITIONER IS A PETROLEUM DISTILLATE BASED CONDITIONER/STABILIZER. TORO DOES NOT RECOMMEND STABILIZERS WITH AN ALCOHOL BASE SUCH AS ETHANOL, METHANOL OR ISOPROPYL. ADDITIVES SHOULD NOT BE USED TO TRY TO ENHANCE THE POWER OR PERFORMANCE OF MACHINE.

OPERATING INSTRUCTIONS

4-in-1 MOWING VERSATILITY

REAR BAG—Bag lush grass in the spring to help keep your lawn free of clippings.

MULCH—In summer, when grass grows slower and is drier, mulch by closing chute door (Fig. 7). For convenience and protection, keep grass bag on mower.

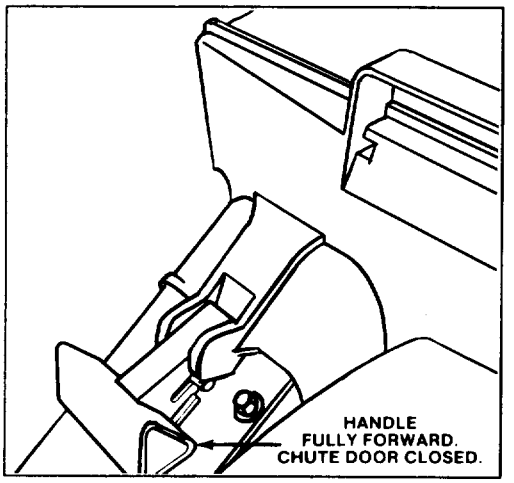

Figure 7

SIDE DISCHARGE—Disperse clippings with optional, rear-mounted side discharge chute which installs in seconds (Fig. 8).

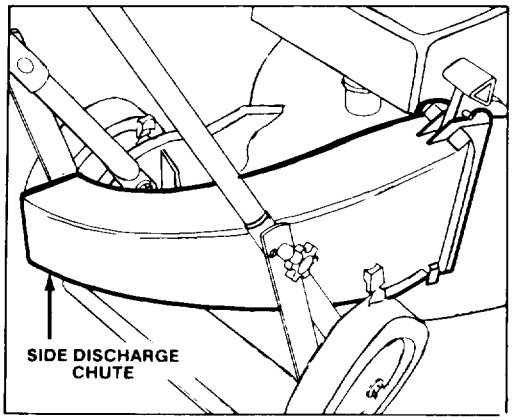

Figure 8

SHRED LEAVES—In fall, optional leaf shredder (Fig. 9) reduces leaves to a fraction of their original size while you bag. Minimized emptying stops and number of trash bags used for disposal.

OPERATING INSTRUCTIONS

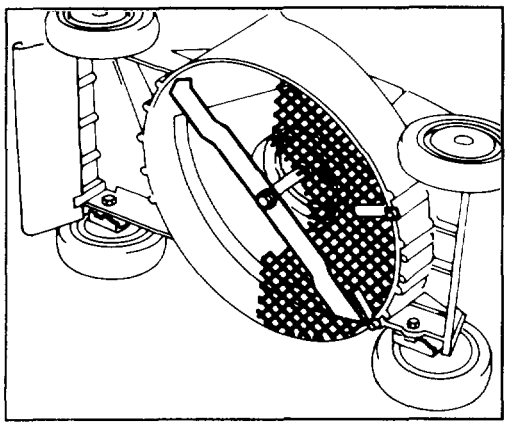

Figure 9

ADJUSTING HEIGHT-OF-CUT

Five letters cast into the housing represent the graduated height-of-cut settings (Fig. 10).

1. Stop the engine and wait for all moving parts to stop.
2. For easier adjustment, lift housing up so wheel is off ground. Squeeze adjusting lever toward wheel and move to desired setting. Ensure pin on adjusting lever engages notch in housing. Adjust all wheels to the same setting.

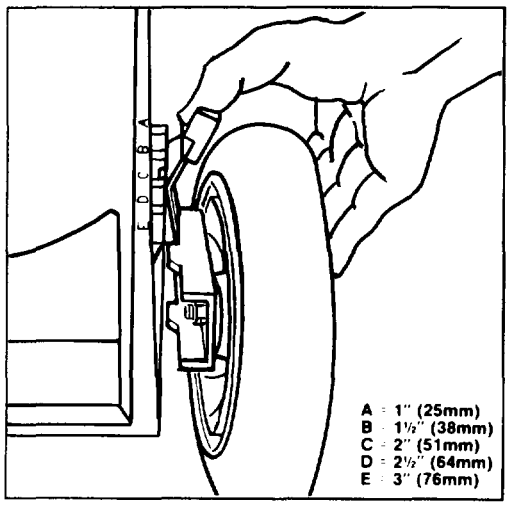

Figure 10

STARTING AND STOPPING (Fig. 11)

1. CONTROLS—Throttle and control bar are on upper handle (Fig. 11).

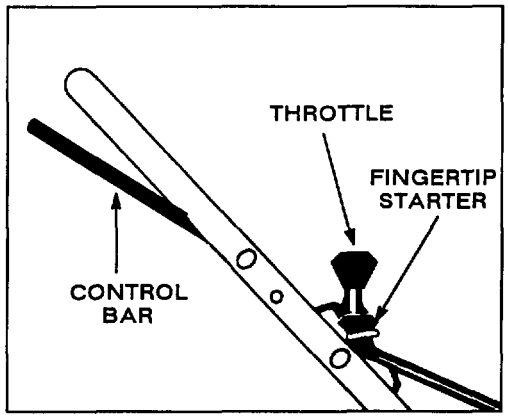

Figure 11

2. STARTING—Push wire onto spark plug. Move throttle to CHOKE and squeeze control bar until it contacts handle. Pull fingertip starter out until positive engagement results; then pull vigorously to start the engine. Regulate throttle as desired when engine starts. If engine does not start after 2 or 3 pulls, wait 10 seconds for carburetor prime well to refill with gasoline.
3. STOPPING—Release control bar and stay behind handle until engine and blade stop. Remove wire from spark plug if mower will be unattended or not used.

USING GRASS BAG

Keep bag installed when bagging or mulching.

1. Stop engine and wait for all moving parts to stop.
2. Ensure chute door handle is fully forward and pin is engaged in catch (Fig. 12).

OPERATING INSTRUCTIONS

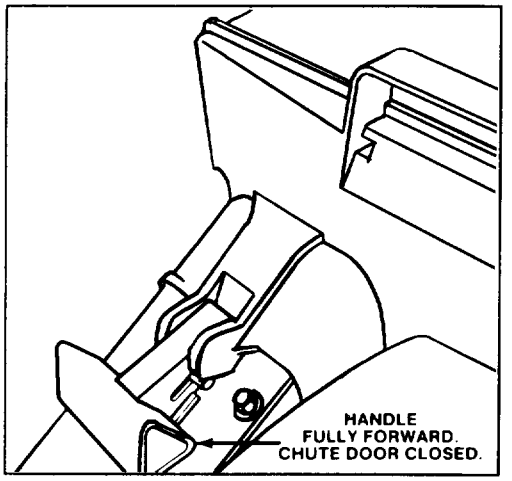

Figure 12

3. INSTALLING BAG (Fig. 13)—Hold front of bag frame and bag door together. Then place opening in bag door against flanges on rear chute and slide bag door down. Set rear of bag frame onto lower handle crossbar.

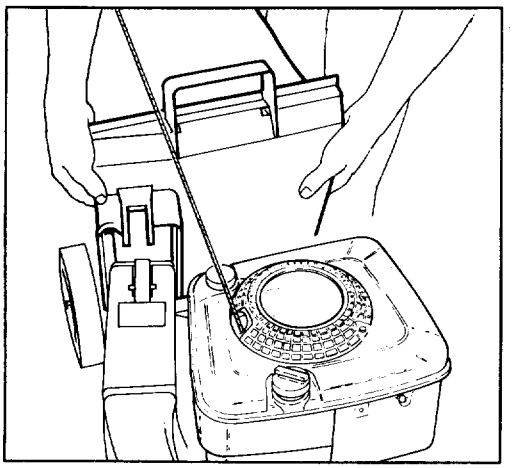

Figure 13

4. Pull chute door handle backward until pin locks bag in place (Fig. 14). Chute door in mower housing is now open.

5. EMPTYING BAG—Stop engine and wait for all moving parts to stop. Move chute door handle forward to engage the locking pin with catch (Fig. 12). Grasp bag handle and rear of bag and lift bag off mower. Gradually tip bag forward to empty clippings.

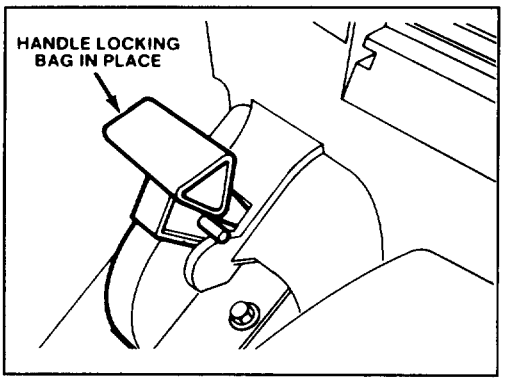

Figure 14

⚠ CAUTION

Never open chute door on mower when motor is running unless grass bag or side discharge attachment is properly installed because grass clippings and other debris discharges with enough force to cause injury.

The grass bag material will catch and contain the majority of foreign objects such as small stones and other similar debris. The bag material, however, is subject to normal wear and deterioration. So check the bag frequently, and if it is defective, install a new genuine TORO replacement bag that has this or similar warning.

OPERATING INSTRUCTIONS

⚠ CAUTION

If chute door cannot be closed because grass clippings clog discharge area, gently move chute door handle back and forth until door can be closed completely. Do not force chute door closed because door or handle may be damaged. If door still cannot be closed, stop motor, disconnect extension cord, and remove obstruction.

6. To reinstall bag, repeat steps 3–4.

OPERATING TIPS

1. CHECK OIL LEVEL—Maintain oil level between ADD and FULL marks as shown on dipstick (Fig. 6).

2. BEFORE EACH MOWING—Ensure engine brake and control bar function properly. When control bar is released, engine and blade are designed to stop.

3. CUTTING AND BAGGING—Best results are achieved when engine is running at maximum speed and only about 1/3 of the grass blade is cut. If long grass must be cut, use highest height-of-cut setting for first mowing. Then recut the grass at a more normal setting. If too long of grass is cut, mower may plug and cause engine to stall.

4. SHARP BLADE—Begin each cutting season with a sharp blade. Periodically file down nicks.

MAINTENANCE

⚠ CAUTION

Pull wire off spark plug before performing adjustments or maintenance.

SERVICING AIR CLEANER

Normally, clean air cleaner after every 25 operating hours. More frequent cleaning is required when mower is operated in dusty or dirty conditions.

1. Stop engine and pull wire off spark plug (Fig. 6).

2. Remove screw securing air cleaner cover to engine (Fig. 15). Tilt cover down and clean thoroughly.

3. Remove paper air cleaner filter and discard (Fig. 16).

4. Insert new paper air cleaner filter cartridge so lip touches back plate as shown in Figure 16.

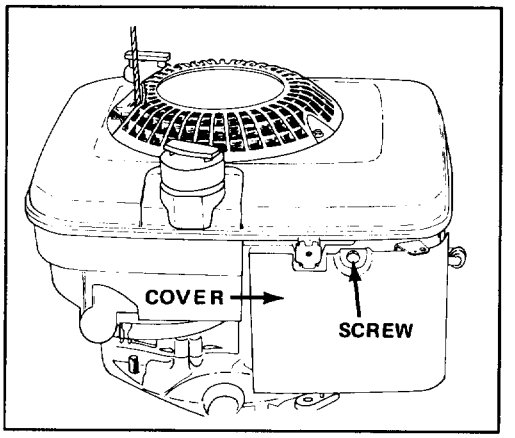

Figure 15

5. Close air cleaner cover and secure with screw.

IMPORTANT: Do not operate engine without air cleaner element because extreme engine wear and damage will likely result.

MAINTENANCE

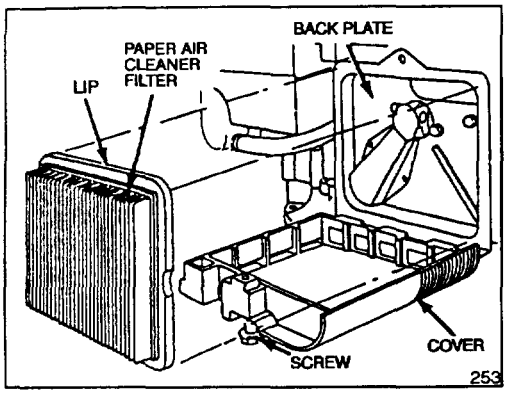

Figure 16

REPLACING SPARK PLUG

Use a Champion RCJ8 or Autolite 245 spark plug or equivalent. Correct air gap is 0.032" (0.8 mm). Remove plug after every 25 operating hours and check its condition.

1. Stop engine and pull wire off spark plug (Fig. 6).
2. Clean around spark plug and remove plug from cylinder head.

IMPORTANT: Replace a cracked, fouled, or dirty spark plug. Do not sand blast, scrape, or clean electrodes because engine damage could result from grit entering cylinder.

3. Set air gap at 0.032" (0.8 mm) (Fig. 17). Install correctly gapped spark plug and gasket seal. Tighten plug firmly to 15 ft-lb (20 N·m).

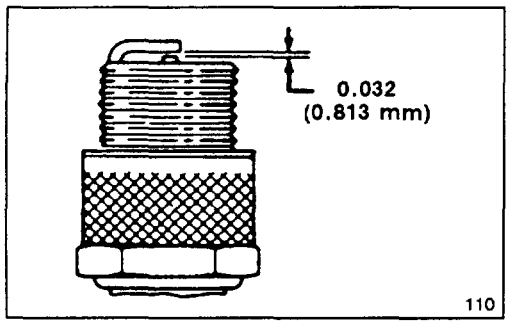

Figure 17

CLEANING MOWER HOUSING

To ensure best performance, keep underside of mower housing and grass deflector clean.

1. Stop engine and pull wire off spark plug.
2. Drain gasoline; refer to Draining Gasoline, page 10.
3. Tip mower on its right side.
4. Remove dirt and grass clippings that are stuck to housing by spraying it with a garden hose. Scrape out remaining debris with hardwood scraper. Avoid burrs and sharp edges.

DRAINING GASOLINE

1. Stop engine and pull wire off spark plug (Fig. 6).

Note: Drain gasoline from a cold engine only.

2. Remove cap from fuel tank and use pump-type syphon to drain fuel into clean gas can.

Note: This is the only procedure recommended for draining fuel.

CHANGING CRANKCASE OIL

Change oil after the first 2 operating hours and after every 25 hours thereafter. Since warm oil drains better and carries more contaminants than cold, run engine for several minutes or so before draining oil.

1. Stop engine and pull wire off spark plug (Fig. 6).
2. Remove grass bag. Drain gasoline from fuel tank: refer to Draining Gasoline, page 10.
3. Tip mower on its right side. Remove drain plug from underside of mower using an adjustable wrench (Fig. 18). Place a drain pan under mower.
4. Lower mower, allowing oil to drain into pan.
5. After draining, clean drain plug and reinstall it. Wipe up any spilled oil. Fill engine with fresh oil: refer to Fill Crankcase With Oil, page 5.

MAINTENANCE

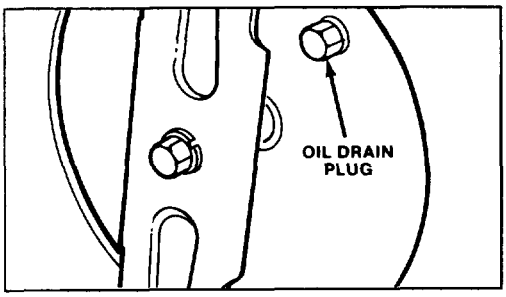

Figure 18

INSPECTING/REMOVING/SHARPENING BLADE

1. Stop engine and pull wire off spark plug (Fig. 22).
2. Drain gasoline from fuel tank; refer to Draining Gasoline, page 10.
3. Tip mower on its right side (Fig. 19).

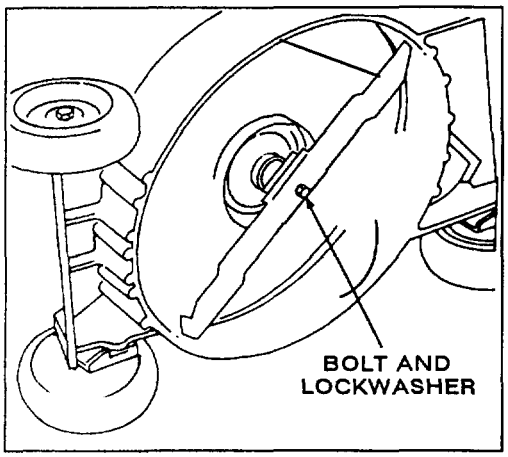

Figure 19

4. INSPECTING BLADE—Carefully examine blade for sharpness and wear, especially where flat and curved parts meet (Fig. 20A). Since sand and abrasive material can wear away the metal that connects the flat and curved parts of the blade, check blade before using the mower. If a slot or wear is noticed, (Fig. 20B & C), replace blade. Refer to step 5.

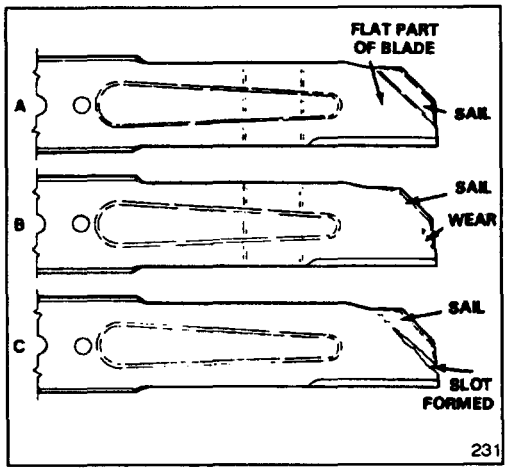

Figure 20

WARNING

If blade is allowed to wear, a slot may form near the sail. Eventually a piece of blade may break off resulting in serious injury to yourself or a bystander.

6. REMOVING BLADE—Grasp end of blade using a rag or thickly padded glove. Remove blade bolt, washer, and blade (Fig. 19).

Note: For best performance, install new blade before cutting season begins. During the year, file down small nicks to maintain the cutting edge.

7. SHARPENING BLADE—Using a file, sharpen top side of blade (side facing mower housing) and maintain original cutting angle (Fig. 21). The blade will remain balanced if the same amount of material is removed from both cutting edges.

IMPORTANT: Check balance of blade by putting it on a blade balancer. An inexpensive balancer can be purchased at a hardware store. A balanced blade will stay in a horizontal position and an unbalanced blade will settle to the heavy side. If the blade is not balanced, file more metal off cutting edge on heavy end of blade.

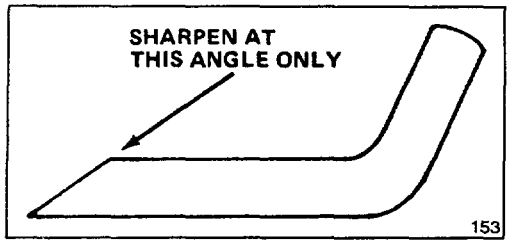

Figure 21

8. Install sharp, balanced TORO blade, washer, and blade bolt. Sail part of blade must point toward top of mower housing to ensure correct installation. Tighten the blade nuts to 45-60 ft-lb (61-81 N·m).

LUBRICATION

After every 25 operating hours or when season ends, front and rear wheels must be lubricated.

1. Apply 2 or 3 drops of light oil on inside and outside of all wheel bolts. Spin wheels to distribute oil into bushings.

2. Wipe up excess oil.

ADJUSTING THROTTLE CONTROL

Throttle control adjustment may be required if engine does not start or stop. Whenever a new throttle control cable is installed, the throttle must be adjusted.

1. Stop engine and pull wire off spark plug (Fig. 22).

2. Move throttle control to FAST.

3. Loosen cable clamp screw until throttle cable slides (Fig. 22). Align holes in throttle lever and throttle bracket using a 1/8" drill bit (Fig. 23). Tighten cable clamp screw to lock adjustment in place.

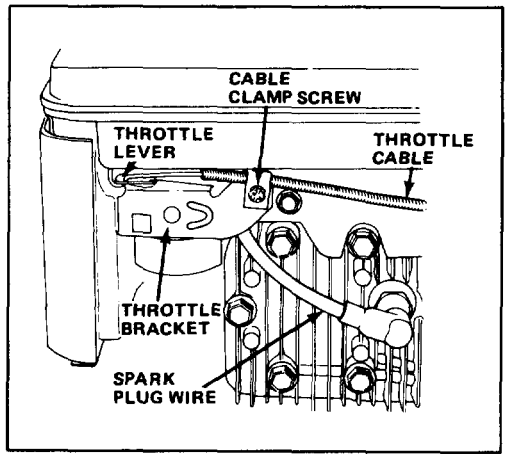

Figure 22

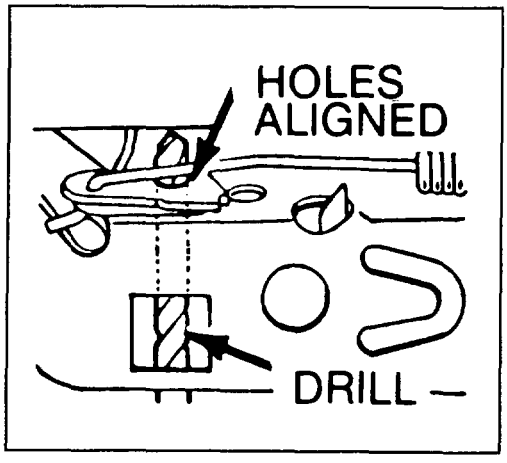

Figure 23

ADJUSTING BLADE BRAKE

Whenever a new blade brake cable assembly is installed, an adjustment is required.

1. Stop engine and pull wire off spark plug.

2. CHECK ADJUSTMENT (Fig. 24)—Move control bar toward handle until slack in wire is removed. Gap between brake lever and handle must be 1/8"-3/16". See step 3 for adjustment.

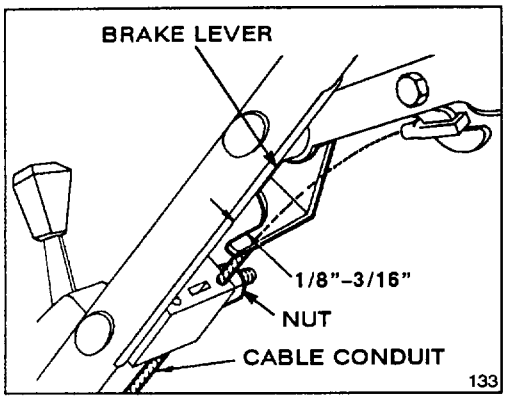

Figure 24

3. ADJUST CABLE CONDUIT—Loosen nut on cable bracket (Fig. 24). Insert 1/8"-3/16" object between brake lever and handle and pull down on cable conduit until slack is removed. Then tighten nut.

PREPARING MOWER FOR STORAGE

1. For long term storage, either drain gasoline from fuel tank or add a fuel stabilizer to the gasoline. To drain gasoline, refer to Draining Gasoline, page 10. After fuel is drained, start engine and let it idle until all fuel is consumed and engine stops. Repeat the starting procedure two more times to assure all gas is removed from the engine. If gasoline is not drained, gum-like varnish deposits will form and cause poor engine operation, even starting problems.

Fuel can be left in gas tank only if a fuel additive, such as Toro's Stabilizer/Conditioner, is added to gasoline and run through engine before storing. Toro's Stabilizer/Conditioner is a petroleum distillate based conditioner/stabilizer. Toro does not recommend stabilizers with an alcohol base, such as ethanol, methanol or isopropyl. Use fuel additive in recommended quantities as specified on container.

Under normal conditions, all fuel additives remain effective in fuel for 6-8 months.

2. Remove spark plug and pour 30 ml (2 tablespoons) of SAE 30 oil into hole in cylinder. Pull starter rope slowly to coat inside of cylinder. Install spark plug and tighten to 15 ft-lb (20 N·m). **DO NOT INSTALL WIRE ON SPARK PLUG.**

3. Clean underside of housing: refer to Cleaning Mower Housing, page 10.

4. Check condition of blade: refer to Inspecting/Removing/Sharpening Blade, page 11.

5. Tighten all nuts, bolts, and screws.

6. Clean dirt and chaff from cylinder, cylinder head fins, and blower housing. Also remove grass clippings, dirt, and grime from external parts of the engine, shrouding, and top of mower housing.

7. Clean air cleaner: refer to Servicing Air Cleaner, pages 9.

8. Touch up all rusted or chipped paint surfaces. Toro Re-Kote paint is available from an Authorized TORO Service Dealer.

9. Store mower in a clean, dry place, out of the reach of children. Cover mower to keep it clean and protected.

PRODUCT IDENTIFICATION

A model and a serial number decal is located at rear of mower housing, near the discharge door. Always refer to specific numbers on this decal in correspondence or when replacement parts are needed.

TORO SERVICE SUPPORT

If help - concerning safety, set-up, operation and maintenance or troubleshooting - is ever needed, contact the local Authorized TORO Service Dealer or Distributor. Refer to the "Yellow Pages" for assistance. In addition to skilled service technicians, the dealer and distributor have factory approved accessories and replacement parts. Keep your Toro all TORO. Buy genuine TORO replacement parts and accessories.