FORM NO. 3320-573

TORO

MODEL NO. 20213 - 1000001 & UP
MODEL NO. 20214 - 1000001 & UP

OPERATOR'S MANUAL

21" (0.53 M) RECYCLER® MOWER

FINGERTIP START

⚠ SAFETY INSTRUCTIONS

BEFORE OPERATING

1. Read this manual carefully before operating the mower. Become familiar with the controls and proper use of the mower. Never allow children to operate the mower or adults to operate it without proper instructions.
2. Keep everyone, especially children and pets, away from area of operation. Thoroughly inspect area where mower will be used and remove sticks, stones, wire, and debris.
3. Wear long pants and substantial shoes. Do not operate mower while wearing open sandals or when barefoot.
4. Check fuel level before starting engine. Do not fill fuel tank indoors, when the engine is running or until engine cools for several minutes after running. Wipe up spilled gasoline before starting engine.
5. Keep all guards, shields, and safety devices in place. Repair or replace defective or damaged parts, including decals. Check all safety devices before each use.
6. Engine, traction drive (model 20214 only) and blade are designed to stop when control bar is released. Ensure engine kill control bar and brake function properly before each use of mower.
7. Disengage the self-propelled mechanism or drive clutch (model 20214) before starting the engine.

WHILE OPERATING

8. Do not run engine indoors.
9. Always maintain secure footing. Keep a firm grip on the handle and walk; never run. Never operate mower in wet grass. Mow only in daylight or in good artificial light.
10. Mow across the face of slopes; never up and down. Use extreme caution when changing direction on slopes. Do not mow excessively steep slopes.
11. Always wear safety glasses or eye shields during operation to protect eyes from foreign objects that may be thrown from the machine. Keep face, hands, and feet away from the mower housing and cutter blade when the engine is running. Stay behind the handle until the engine stops.
12. When bagging grass, stop engine and ensure discharge door is closed before the bag is removed and emptied.
13. Shut engine off and wait for all moving parts to stop before unclogging discharge tunnel, removing grass bag or discharge tunnel plug.
14. Since the blade rotates for a few seconds after the engine kill control bar is released, stay behind the handle until all moving parts stop.
15. After striking a foreign object or if mower vibrates abnormally, stop engine and remove wire from spark plug. Check mower for damage and make all repairs before using mower again.
16. Stop the engine before adjusting the height-of-cut.
17. Stop the engine when crossing a gravel driveway, road, or sidewalk.
18. Stop engine before leaving the operator's position—behind the handle. Disconnect wire from spark plug if mower will be unattended or not used.

©The Toro Company-1991

⚠ SAFETY INSTRUCTIONS

19. Do not touch engine while it is running or shortly after it is stopped because engine will be hot enough to cause a burn.

MAINTENANCE

20. Perform only those maintenance instructions described in this manual. If major repairs are ever needed or if assistance is desired, contact your local Authorized TORO Service Dealer.

21. Before mower is cleaned, inspected, serviced or adjusted, stop engine and disconnect wire from spark plug. Keep wire away from plug to prevent accidental starting.

22. To ensure the mower is in safe operating condition, frequently check and keep all nuts, bolts, and screws tight. Ensure blade bolt is tightened to 50 ft-lb (68 N·m).

23. To reduce fire hazard, keep engine free of excessive grease, grass, leaves, and accumulations of dirt.

24. Check grass catcher bag frequently for wear or deterioration. Replace with a new bag for your protection. Check that replacement bags comply with TORO's original recommendations or specifications.

25. Allow engine to cool before storing mower in any enclosure. Do not store mower near any open flame or where gasoline fumes may be ignited by a spark.

26. Do not overspeed the engine by changing governor settings.

27. At the time of manufacture, the mower conformed to the safety standards in effect for rotary mowers. To ensure best performance and continued safety certification of the mower, use genuine TORO replacement parts and accessories. Replacement parts and accessories made by other manufacturers may result in non-conformance with the safety standards, and that could be dangerous.

SAFETY SYMBOL GLOSSARY



Safety alert



Keep hands and feet away from rotating blade



Keep hands and feet away from blade



Engine speed (Throttle)



Keep bystanders from area being mowed



Keep all guards in place



Traction drive ENGAGED



Traction drive DISENGAGED



Stop engine before leaving operator position



Fast



Slow



Pull fingertip starter. Squeeze control bar against handle to drive



Locked



Unlocked



Squeeze control bar against handle to drive



Never open chute door on mower when engine is running, unless grass bag or side discharge attachment is installed



Neutral



Read and understand operator's manual

TABLE OF CONTENTS

	Page
Set-Up Instructions	4
Before Operating	5
Recycler® Mower Tips	7
Operating Instructions	9
Maintenance	11
Servicing Air Cleaner	11
Replacing Spark Plug	12
Draining Gasoline	13
Adjusting Throttle	13
Changing Crankcase Oil	13
Adjusting Wheel Drive	14
Inspecting/Removing/Sharpening Blade	14
Lubrication	15
Adjusting Blade Brake	16
Cleaning Mower Housing, Discharge Tunnel and Plug	16
Preparing Mower For Storage	17
Product Identification	17
Toro Service Support	17
Optional Equipment	18

SET-UP INSTRUCTIONS

INSTALL HANDLE AND STARTER ROPE

1. Align handles and tighten handle knobs (Figs. 1 & 2). Bend handle latches slightly toward each other (Figs. 1 & 2).

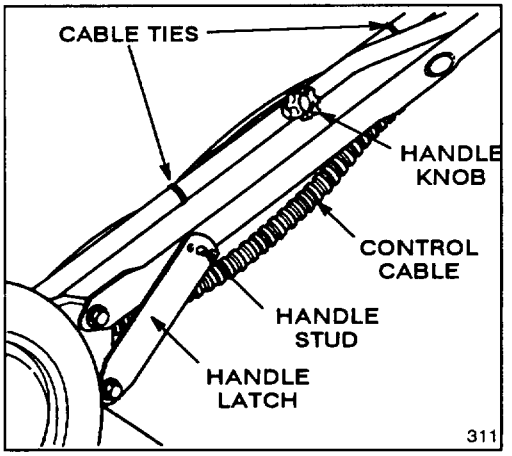

(Model 20214)

Figure 1

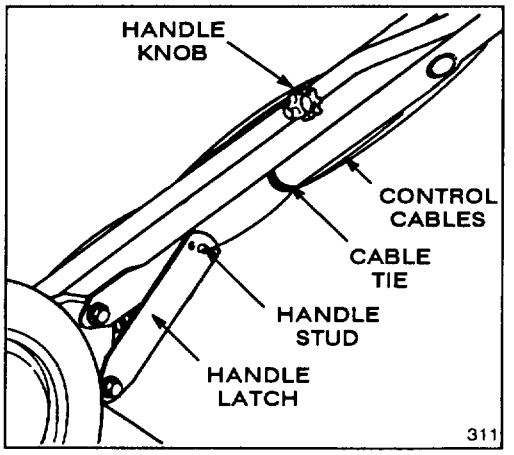

(Model 20213)

Figure 2

2. Pivot handle backward until handle stud snaps into center hole of handle latch (Figs. 1 & 2). If handle height is not satisfactory, adjust by placing handle stud into a different hole. Secure control cables in position with cable tie(s).

3. Pull starter rope through rope guide on handle (Fig. 3). By squeezing control bar to handle, blade brake will release and allow rope to be pulled up easily to loop.

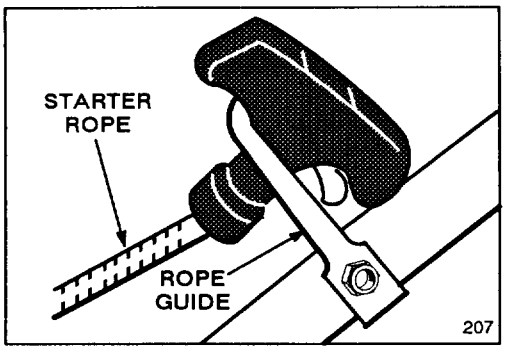

Figure 3

INSTALL DISCHARGE TUNNEL PLUG

1. Open the discharge door by pulling forward on the handle and moving it rearwards (Fig. 4). Hold the discharge door handle to prevent the spring-loaded door from closing while inserting the plug.

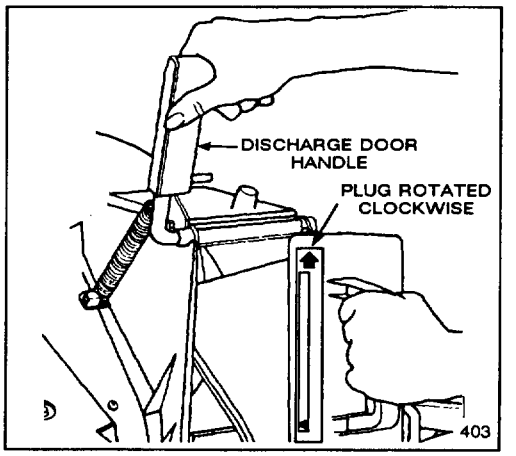

Figure 4

2. Since the plug is slightly wider than the discharge tunnel opening, rotate the plug clockwise slightly while inserting it (Fig. 4). Make sure the arrow on the plug decal is pointing upwards.

SET-UP INSTRUCTIONS

3. Push the plug all the way in until the spring clip on the bottom of the plug clicks into place, locking the plug securely into the discharge tunnel (Fig. 5). Release discharge door handle to lock top of plug.

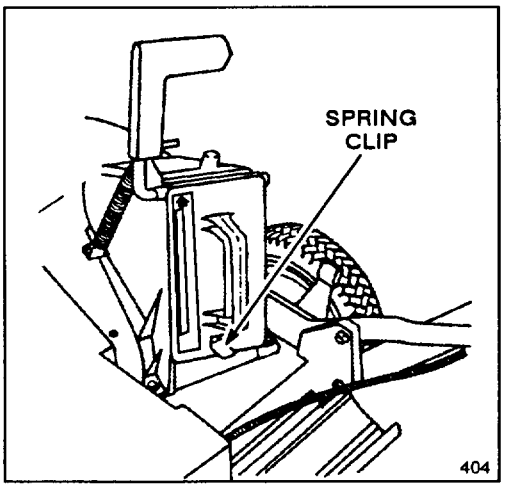

Figure 5

BEFORE OPERATING

FILL CRANKCASE WITH OIL

Initially, crankcase must be filled with 20 ounces (0.621 L) of SAE 30 or 10W30 oil. Use any high quality detergent oil having the American Petroleum Institute (API) "service classification"—SC, SD, SE, SF or SG.

Before each use, ensure oil level is between FULL and ADD marks on dipstick (Fig. 6). Add oil if level is low.

1. Position mower on a level surface and clean around oil dipstick.

2. Remove dipstick by rotating cap counterclockwise 1/4 turn.

3. Wipe dipstick and insert it into filler neck. Rotate cap clockwise 1/4 turn. Then remove dipstick and check level of oil on side of dipstick with FULL and ADD marks (Fig. 6). If level is low, add only enough oil to raise level to FULL mark on dipstick. **DO NOT FILL ABOVE FULL MARK BECAUSE ENGINE COULD BE DAMAGED WHEN STARTED. POUR OIL SLOWLY.**

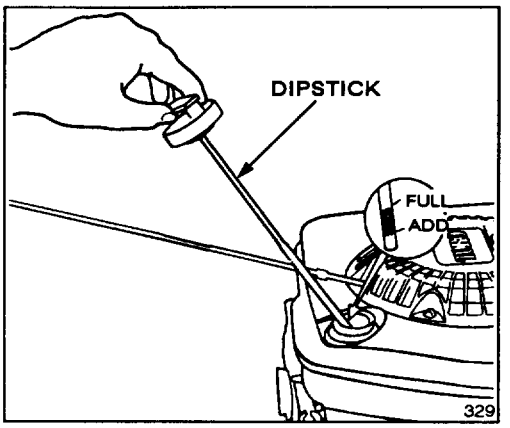

Figure 6

4. Insert dipstick into filler neck and rotate cap clockwise 1/4 turn to lock.

Note: Check oil level each time mower is used or after every 5 operating hours. Initially, change oil after the first 2 hours of operation; thereafter, change oil after every 25 hours of operation. More frequent oil changes are required in dusty or dirty conditions.

BEFORE OPERATING

WARNING

DANGER: Gasoline is extremely flammable and explosive under certain conditions. Do not smoke when handling fuel and keep fuel far away from open flames and sparks. Never buy more than a 30 day supply of gasoline. Store it in an approved container. Keep gasoline out of reach of children.

Refuel outdoors and only when engine is cold. Do not fill tank full. Fill tank to within 1/4" to 1/2" (6 to 13 mm) from top of tank, not into filler neck. This space is for expansion of fuel. Use funnel or spout to prevent spilling. Wipe up any spilled gas.

FILL FUEL TANK WITH GASOLINE

Note: The Toro Company strongly recommends the use of fresh, clean, UNLEADED regular grade gasoline in Toro gasoline powered products. Unleaded gasoline burns cleaner, extends engine life, and promotes good starting by reducing the build-up of combustion chamber deposits. Leaded gasoline can be used if unleaded is not available.

1. Clean around fuel tank cap and remove cap from tank (Fig. 7). Using unleaded gasoline, fill fuel tank to within 1/4 to 1/2 inch (6 to 13 mm) from top of tank, not into filler neck. Do not fill tank full.

2. Reinstall fuel tank cap and wipe up any spilled gasoline.

Toro also recommends that Toro Stabilizer/Conditioner be used regularly in all Toro gasoline powered products during operation and storage seasons. Toro Stabilizer/Conditioner cleans the engine during operation and prevents gum-like varnish deposits from forming in the engine during periods of storage.

IMPORTANT: DO NOT MIX OIL WITH THE GASOLINE. NEVER USE METHANOL, GASOLINE CONTAINING METHANOL, GASOHOL CONTAINING MORE THAN 10% ETHANOL, OR WHITE GAS BECAUSE ENGINE FUEL SYSTEM DAMAGE COULD RESULT.

DO NOT USE FUEL ADDITIVES OTHER THAN THOSE MANUFACTURED FOR FUEL STABILIZATION DURING STORAGE SUCH AS TORO'S STABILIZER/CONDITIONER OR A SIMILAR PRODUCT. TORO'S STABILIZER/CONDITIONER IS A PETROLEUM DISTILLATE BASED STABILIZER/CONDITIONER. TORO DOES NOT RECOMMEND STABILIZERS WITH AN ALCOHOL BASE SUCH AS ETHANOL, METHANOL OR ISOPROPYL. STABILIZERS SHOULD NOT BE USED TO TRY TO ENHANCE THE POWER OR PERFORMANCE OF MACHINE.

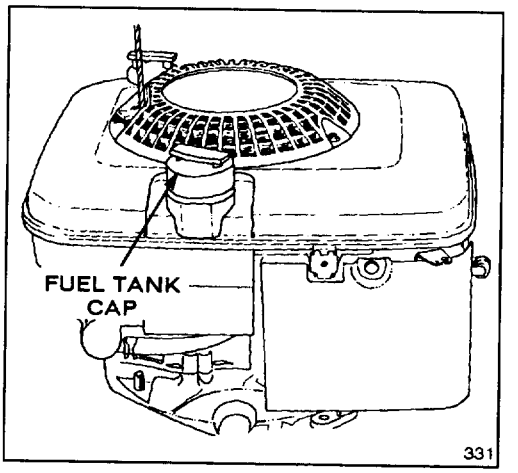

Figure 7

RECYCLER® MOWER TIPS

RECYCLER® MOWER FEATURES

The Toro Recycler® mower has a new and completely different cutting concept that leaves your lawn with a bagged look without bagging clippings.

Your Recycler® mower is equipped with special parts which increase your mower's ability to cut and recut grass clippings, leaves, and other yard debris into tiny particles and inject them down into the grass. These parts are:

A. A special blade and blade stiffener

B. Four special "kicker plates" positioned on the underside of the mower deck in strategic positions (Fig. 8)

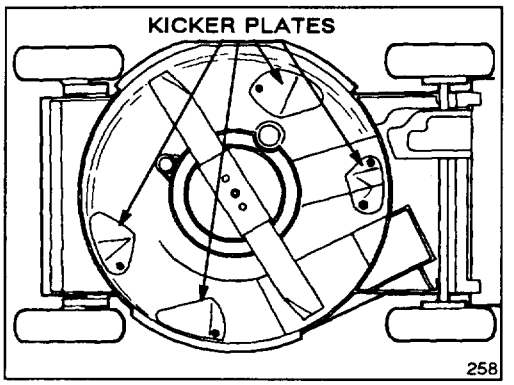

Figure 8

C. A special plug which locks into the mower's discharge tunnel (a fifth kicker is on the plug) (Fig. 9)

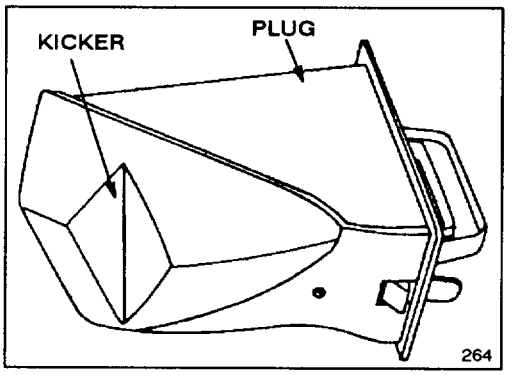

Figure 9

The blade and four kicker plates are permanent parts of your mower. The blade should be removed only for sharpening or replacement. The kickers should never be removed, unless they need to be replaced. They do not interfere with the normal bagging or optional side discharge operations of the mower.

The plug, however, is a removable part, just as the grass bag and optional side discharge chute are removable parts. You cannot use the plug in combination with either the grass bag or the side discharge chute.

It is possible to mow without using the plug by closing the discharge tunnel door. However, your lawn appearance will be much more satisfactory if you use the plug as it has an additional kicker (Fig. 9) that helps drive the clippings down into the grass.

⚠ WARNING

Never start or operate the mower unless one of the following is true:

1. The discharge tunnel plug is locked in place.

2. The bag is locked in place.

3. The side discharge chute is locked in place.

4. The discharge door is locked closed.

⚠ WARNING

Mow grass in dry conditions only. For safety reasons, never operate mower in wet grass. There is the possibility that you may slip on wet grass and that your foot might slide into the blade path.

RECYCLER® MOWER TIPS

TIPS FOR CUTTING GRASS CLIPPINGS

Even with the Recycler® mower, you may encounter conditions where it is not possible to hide all of the finely cut clippings or leaves all of the time down in the grass. Follow these instructions for the best cutting results and lawn appearance:

- Maintain a **sharp blade** throughout the cutting season. Periodically file down nicks on blade.
- Clean any residue from the underside of mower housing, kickers, and plug after each use. See Cleaning Mower Housing, Discharge Tunnel and Plug, page 16.
- When cutting grass over 6" tall, you may want to cut the lawn twice to hide clippings down in the grass.
- In the heat of the summer, it is generally best to cut grass at the C, D or E height-of-cut settings. Only about 1/3 of the grass blade should be cut. Cutting below the C setting is not recommended unless grass is sparse or it is late fall when grass growth begins to slow down. If long grass must be cut, you may need to use a higher height-of-cut setting and a slower walking speed; then recut the grass at a more normal setting. If grass is too long and leaves clumps on top of lawn, mower may plug and cause engine to stall.
- Alternate mowing direction. This helps disperse clippings over lawn for even fertilization.

If the finished cut lawn appearance is unsatisfactory, try one or more of the following:

- Sharpen the blade.
- Walk at a slower pace while mowing.
- Raise the height-of-cut setting on your mower.
- Cut your grass more frequently.
- Overlap cutting swaths instead of cutting a full swath with each pass.
- Mow across the marginal areas a second time.

TIPS FOR CUTTING LEAVES

You can cut up leaves in the fall instead of bagging. If you decide to bag, the Recycler® mower reduces the number of leaf bags you will need by finely chopping up the leaves before they are bagged. Some leaf particles will be injected back down into the soil. When spring arrives, the leaf particles will have decomposed and returned valuable nutrients to the soil.

- Ensure leaves are dry.
- When cutting is complete, always be sure that 50% of the lawn shows through the cut leaf cover. This may require one or more passes over the leaves.
- For light leaf coverage, position all wheels at the same height-of-cut setting.
- If there are more than 5" of leaves on lawn, set the front wheels one or two notches higher than the rear wheels. This makes it easier to feed leaves under mower deck.
- Walk at a slower mowing speed if leaves are not being cut up finely enough to be hidden down in the grass.
- If you cut up a lot of oak leaves, you might want to add lime to your grass in the spring. Lime reduces the acidity of oak leaves.

OPERATING INSTRUCTIONS

OPERATING TIPS

1. CHECK OIL LEVEL—Maintain oil level between ADD and FULL marks as shown on dipstick (Fig. 6).

2. BEFORE EACH MOWING—Ensure engine brake, self-propelled drive (model 20214 only), and control bar function properly. When control bar is released, engine, blade and self-propelled drive are designed to stop.

STARTING, STOPPING, AND SELF-PROPELLING (self-propelled model)

1. CONTROLS—Throttle, ground speed control (model 20214), control bar, and fingertip starter are on upper handle (Figs. 10 & 11).

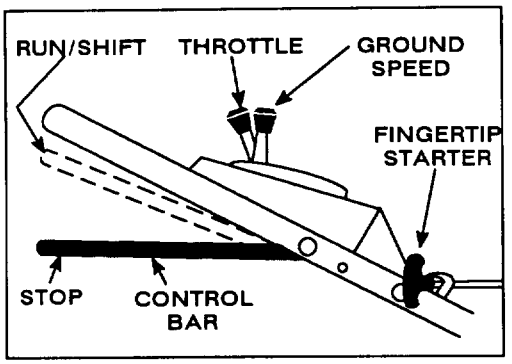

Model 20214

Figure 10

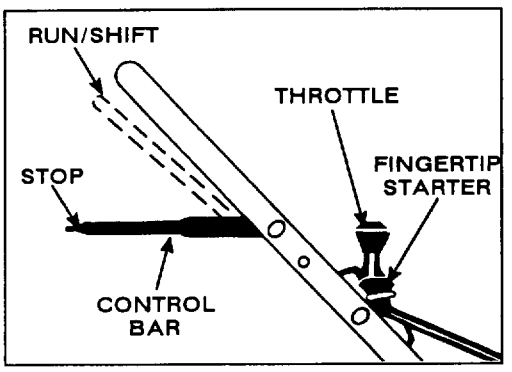

Model 20213

Figure 11

2. Push spark plug wire onto spark plug (Fig. 19).

3. STARTING—Move ground speed control to "N" (model 20214 only) and throttle to CHOKE. Lift control bar to handle (Figs. 10 & 11) and hold. Pull fingertip starter out until positive engagement results; then pull vigorously to start the engine. Regulate throttle as desired when engine starts.

4. GROUND SPEED (model 20214 only) (Fig. 10)—Move ground speed control to desired setting. Number "1" is slow, "2" is medium, and "3" is a fast walking pace. Move ground speed control to "N" when using the mower for trimming and whenever leaving mower. Ground speed varies depending on distance between control bar and handle.

5. WHEEL TRACTION OPERATION (model 20214 only) (Fig. 10)—Allow control bar to move into the RUN/SHIFT position. Move ground speed control to desired setting and squeeze control bar against handle to drive.

Note: The drive wheels are equipped with freewheeling clutches which enable the mower to be pulled rearward easier when the wheel drive is disengaged. To disengage the clutches, mower must be pushed forward at least 1" after wheel drive operation has stopped.

6. STOPPING—To stop engine, release control bar. Pull wire off spark plug if mower will be unattended or not used.

USING DISCHARGE TUNNEL PLUG

1. Make sure engine is off. Open the discharge door by pulling forward on the handle and moving it rearwards (Fig. 12). Hold the discharge door handle to prevent the spring-loaded door from closing while inserting the plug.

2. Since the plug is slightly wider than the discharge tunnel opening, you must rotate the plug clockwise slightly while inserting it (Fig. 12). Make sure the arrow on the plug decal is pointing upwards.

OPERATING INSTRUCTIONS

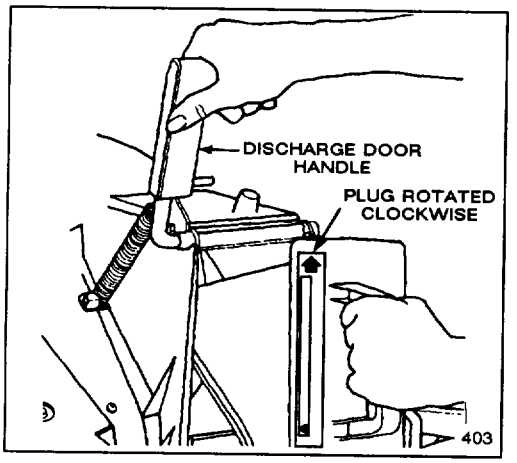

Figure 12

3. Push the plug all the way in until the spring clip on the bottom of the plug clicks into place, locking the plug securely into the discharge tunnel (Fig. 13). Release the discharge door handle to lock the top of the plug.

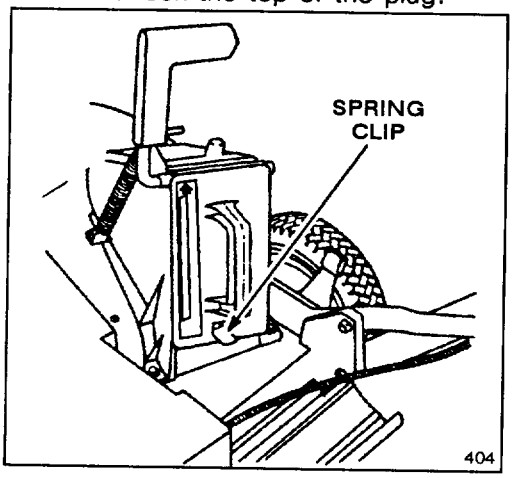

Figure 13

4. To remove the plug, move the discharge door handle rearwards while at the same time lift up the spring clip on the bottom of the plug. When the plug is unlocked, pull it out of the discharge tunnel.

USING GRASS BAG

Occasionally you may wish to use the grass bag for bagging extra long grass, lush grass or leaves.

1. Stop engine and wait for all moving parts to stop.
2. Ensure discharge door handle is fully forward and pin is engaged in catch (Fig. 14).
3. INSTALLING BAG—Slide hole in bag frame onto retaining post on housing (Fig. 14) and set rear of bag frame onto lower handle.

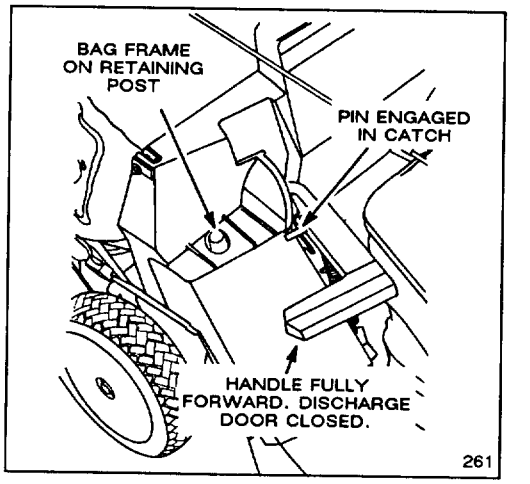

Figure 14

4. Pull discharge door handle forward until pin clears catch and move handle rearward until pin locks in bag notch (Fig. 15). Discharge door in mower housing is now open.

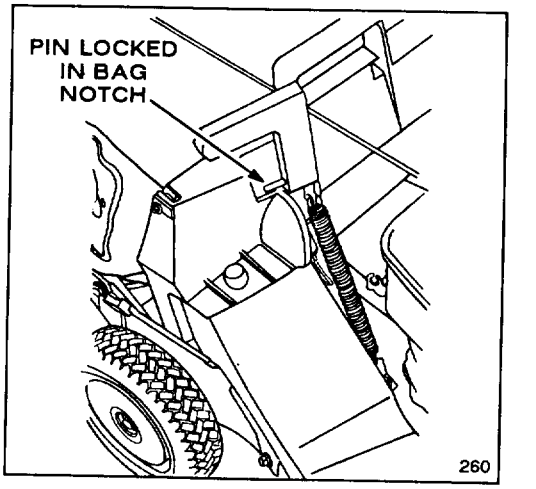

Figure 15

OPERATING INSTRUCTIONS

⚠ CAUTION

Except when grass bag, side discharge attachment or discharge tunnel plug is used, never open discharge door on mower when engine is running because grass clippings and other debris discharges with enough force to cause injury.

The grass bag material will catch and contain the majority of foreign objects such as small stones and other similar debris. The bag material, however, is subject to normal wear and deterioration. So check the bag frequently, and if it is defective, install a new genuine TORO replacement bag that has this or a similar warning.

⚠ CAUTION

If discharge door cannot be closed because grass clippings clog discharge area, gently move discharge door handle back and forth until door can be closed completely. Do not force discharge door closed because door or handle may be damaged. If door still cannot be closed, stop engine and remove obstruction.

5. EMPTYING BAG—Stop engine and wait for all parts to stop. Raise discharge door handle and move it forward to engage the locking pin with catch (Fig. 14). Grasp handle at front and rear of bag and lift bag off mower. Gradually tip bag forward to empty clippings.

6. To reinstall bag, repeat steps 3-4.

ADJUSTING HEIGHT-OF-CUT

Five letters cast into the housing represent each graduated height-of-cut increment (Fig. 16).

1. Stop the engine and wait for all moving parts to stop.

2. For easier adjustment, lift housing up so wheel is off ground. **Do not put fingers under housing when lifting.** Squeeze adjusting lever toward wheel and move to desired setting (Fig. 16). Ensure pin on adjusting lever engages slot in housing. Adjust all wheels to the same setting.

Note: Front wheels can be adjusted to 1/2 inch. Move adjusting lever past "A" and release pin into hole in housing.

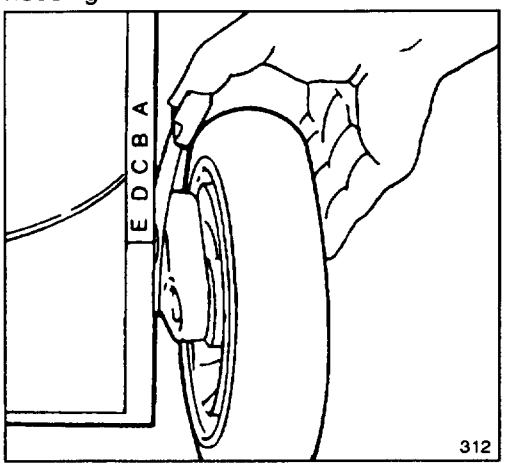

Figure 16

MAINTENANCE

⚠ CAUTION

Pull wire off spark plug before performing adjustments or maintenance.

SERVICING AIR CLEANER

Normally, replace air cleaner after every 25 operating hours. More frequent replacement is required when mower is operated in dusty or dirty conditions.

1. Stop engine and pull wire off spark plug (Fig. 19).
2. Remove screw securing air cleaner cover to engine (Fig. 17). Tilt cover down and clean thoroughly.

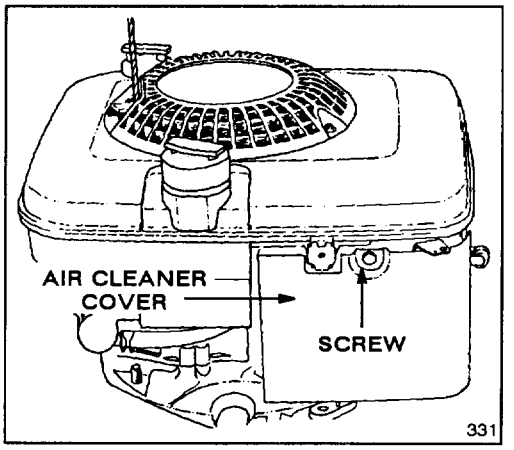

Figure 17

3. Remove paper air cleaner filter (Fig. 18) and discard.

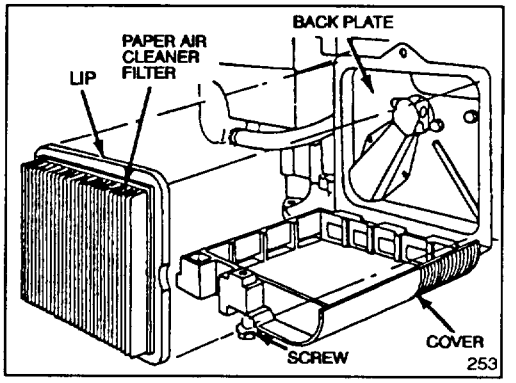

Figure 18

4. Insert new paper air cleaner filter cartridge so lip touches back plate as shown in Figure 18.
5. Replace air cleaner cover and secure with screw.

IMPORTANT: Do not operate engine without air cleaner element because extreme engine wear and damage will likely result.

REPLACING SPARK PLUG

Use a Champion RJ19LM spark plug or equivalent. Correct air gap is 0.030" (0.76 mm). Remove plug after every 25 operating hours and check its condition.

1. Stop engine and pull wire off spark plug (Fig. 19).
2. Clean around spark plug and remove plug from cylinder head.

IMPORTANT: Replace a cracked, fouled, or dirty spark plug. Do not sand blast, scrape, or clean electrodes because engine damage could result from grit entering cylinder.

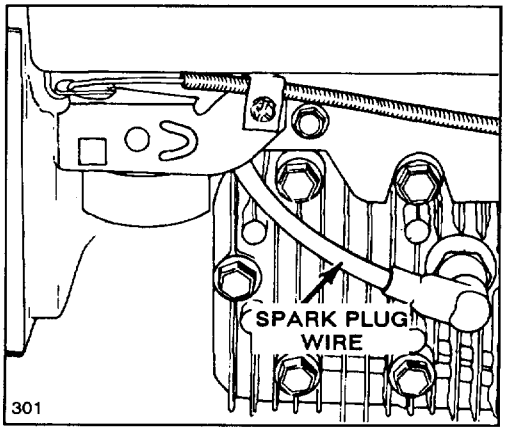

Figure 19

3. Set air gap at 0.030" (0.76 mm) (Fig. 20). Install correctly gapped spark plug and gasket seal. Tighten plug firmly to 15 ft-lb (20 N·m).

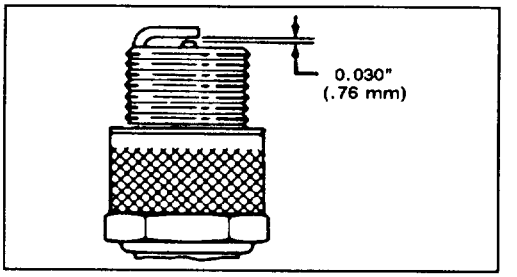

Figure 20

MAINTENANCE

DRAINING GASOLINE

1. Stop engine and wait for engine to cool. Pull wire off spark plug (Fig. 19).

Note: Drain gasoline from a cold engine only.

2. Remove cap from fuel tank and use pump-type syphon to drain fuel into clean gas can.

Note: This is the only procedure recommended for draining fuel.

ADJUSTING THROTTLE

Throttle control adjustment may be required if engine does not start or stop. Whenever a new throttle control cable is installed, throttle must be adjusted.

1. Stop engine and pull wire off spark plug (Fig. 21).

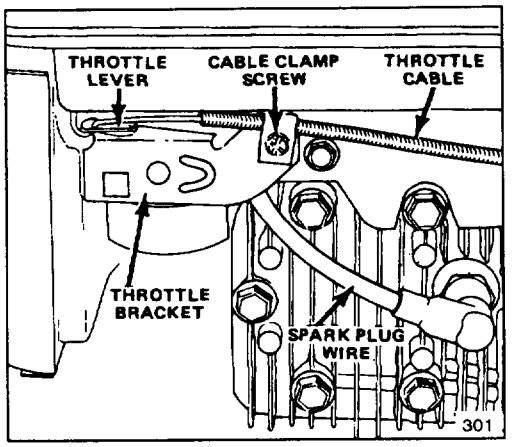

Figure 21

2. Move throttle control to FAST.

3. Loosen cable clamp screw until throttle cable slides (Fig. 21). Align holes in throttle lever and throttle bracket using a .12" (3 mm) dia. pin or a 1/8" dia. drill (Fig. 22). Tighten cable clamp screw to lock adjustment in place.

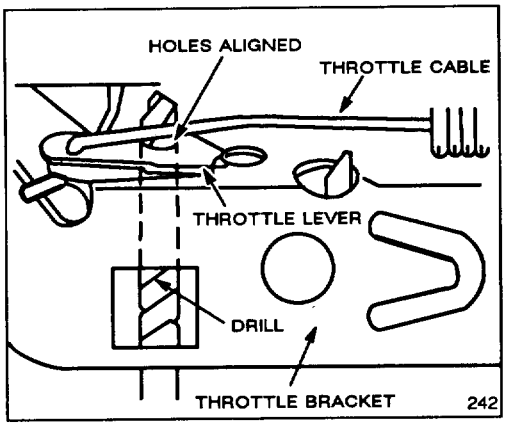

Figure 22

CHANGING CRANKCASE OIL

Change oil after the first 2 operating hours and every 25 hours thereafter. Since warm oil drains better and carries more contaminants than cold, run engine for a minute or so before draining oil.

1. Stop engine and pull wire off spark plug (Fig. 21).

2. If necessary, remove grass bag. Drain gasoline from fuel tank: refer to Draining Gasoline, page 13.

3. Tip mower on its right side. Remove drain plug from underside of mower using an adjustable wrench (Fig. 23). Place a drain pan under mower.

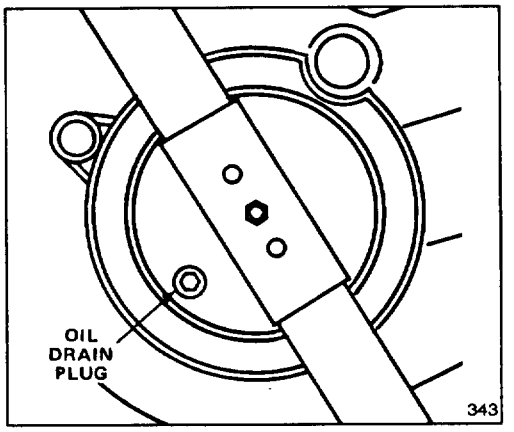

Figure 23

4. Lower mower to allow oil to drain into pan.

5. After draining, clean drain plug and reinstall it. Wipe up any spilled oil. Fill engine with fresh oil: refer to Fill Crankcase With Oil, page 5.

ADJUSTING WHEEL DRIVE (self-propelled model only)

If mower does not self-propel or self-propels when control bar is **more** than 1-1/2 inches from the handle, adjust wheel drive control knob on rear of gear box.

1. If necessary, remove grass bag.

2. ADJUSTMENT (Fig. 24)—Rotate control knob clockwise 1/2 turn if mower does not self-propel. If mower creeps forward, rotate knob 1/2 turn counterclockwise to loosen belt.

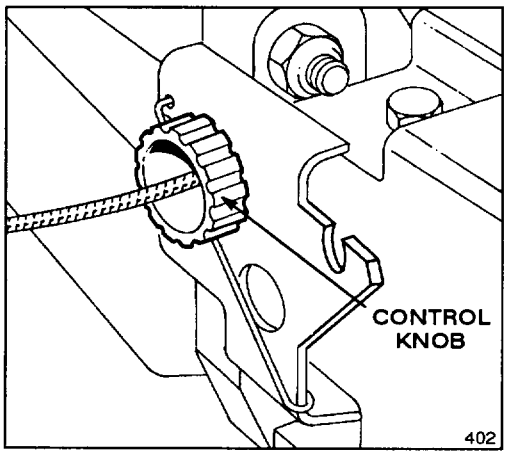

Figure 24

3. CHECK ADJUSTMENT—Adjustment is correct when control bar is about 1-1/2 inches from handle (Fig. 25) and wheels start to turn freely.

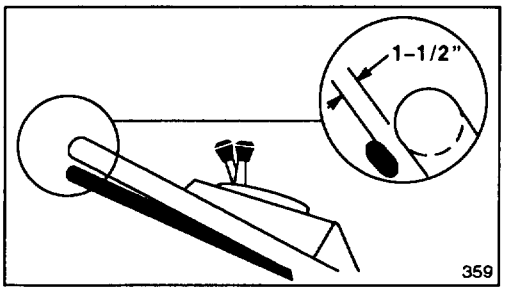

Figure 25

4. Repeat steps 2 and 3 until properly adjusted.

INSPECTING/REMOVING/SHARPENING BLADE

Always mow with a sharp blade. A sharp blade cuts cleanly and without tearing or shredding the grass blades like a dull blade.

1. Stop engine and pull wire off spark plug (Fig. 21).

2. Drain gasoline from fuel tank; refer to Draining Gasoline, page 13.

3. Tip mower on its right side (Fig. 26). Avoid rotating blade because starting problems may result.

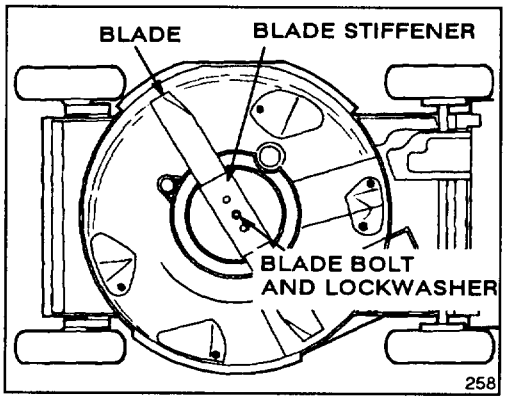

Figure 26

4. INSPECTING BLADE—Carefully examine blade for sharpness and wear, especially where flat and curved parts meet (Fig. 27A). Since sand and abrasive material can wear away the metal that connects the flat and curved parts of the blade, check blade before using the mower. If a slot or wear is noticed (Fig. 27B & C), replace blade. Refer to step 5.

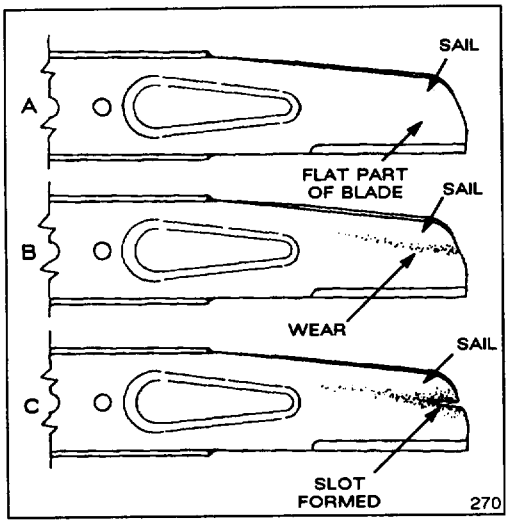

Figure 27

Note: For best performance, install new blade before cutting season begins. During the year, file down small nicks to maintain the cutting edge.

⚠ CAUTION

If blade is allowed to wear, a slot may form near the sail. Eventually a piece of blade may break off resulting in serious injury to yourself or a bystander.

5. REMOVING BLADE—Grasp end of blade using a rag or thickly padded glove. Remove blade bolt, lockwasher, blade stiffener and blade (Fig. 26).

6. SHARPENING BLADE—Using a file, sharpen top side of blade and maintain original cutting angle (Fig. 28). The blade will remain balanced if same amount of material is removed from both cutting edges.

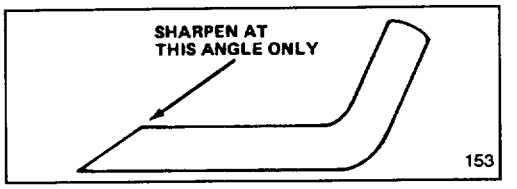

Figure 28

IMPORTANT: Check balance of blade by putting it on a blade balancer. An inexpensive balancer can be purchased at a hardware store. A balanced blade stays in a horizontal position and an unbalanced blade settles to the heavy side. If blade is not balanced, file more metal off cutting edge on heavy end of blade.

7. Install sharp, balanced TORO blade, blade stiffener, lockwasher and blade bolt. Sail part of blade must point toward top of mower housing to ensure correct installation. Tighten the blade bolt to 50 ft-lb (68 N·m).

LUBRICATION

After every 25 operating hours or when season ends, front and rear wheels must be lubricated.

1. Apply 2 or 3 drops of light oil on inside of front and outside of all wheel bolts. Spin wheels to distribute oil into bushings. Wipe up excess oil.

2. On self-propelled models, move rear wheel height-of-cut levers to "C" setting. Wipe grease fittings with clean rag (Fig. 29). Install grease gun onto fitting and gently apply 2 or 3 pumps of #2 Multi-Purpose Lithium Base Grease. Excess pressure may damage seals.

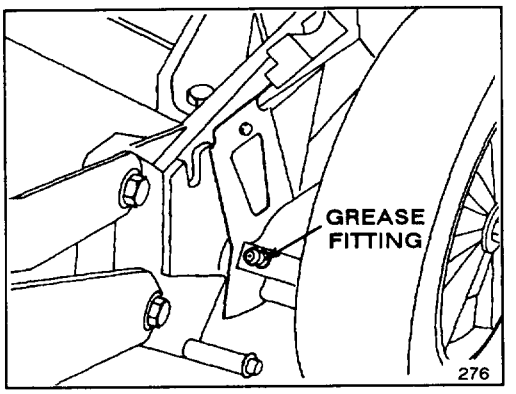

Self-propelled model only

Figure 29

ADJUSTING BLADE BRAKE

Whenever a new blade brake cable assembly is installed, an adjustment is required.

1. Stop engine and pull wire off spark plug (Fig. 21).
2. CHECK ADJUSTMENT (Fig. 30)—Move control bar toward handle until slack in wire is removed. Gap between brake lever and handle must be 1/8"-3/16". See step 3 for adjustment.

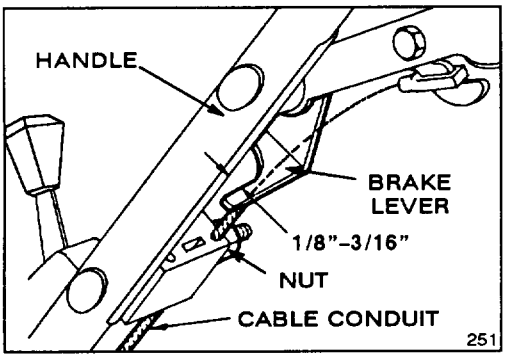

Figure 30

3. ADJUST CABLE CONDUIT (Fig. 30)—Loosen nut on cable bracket. Insert 1/8"-3/16" object between brake lever and handle. Pull down on cable conduit until all slack is removed from wire. Then tighten nut.

CLEANING MOWER HOUSING, DISCHARGE TUNNEL AND PLUG

To ensure best performance, the discharge tunnel plug must be cleaned after each use. When grass is thick and lush, clippings may collect on and around the plug; this may make plug removal difficult. After each use, remove plug from discharge tunnel and clean off all debris.

Keep underside of mower housing clean. Be especially careful to keep kickers on underside of mower housing free of debris (Fig. 31).

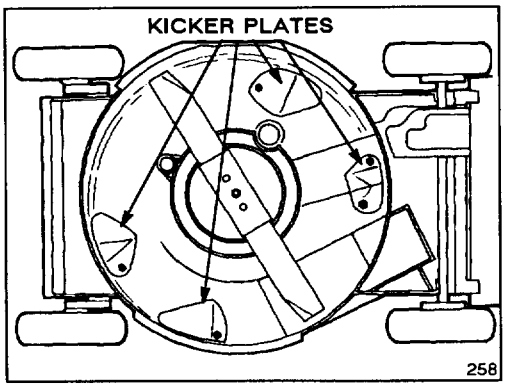

Figure 31

Always be sure that discharge tunnel door locks closed when handle is released. If debris prevents discharge door from locking closed, clean inside of discharge tunnel and door thoroughly.

1. Stop engine and pull wire off spark plug (Fig. 21).
2. Tip mower on its right side (Fig. 31). Avoid rotating blade because starting problems may result.
3. Remove dirt and grass clippings that stick to housing with a hardwood scraper. Avoid burrs and sharp edges.

MAINTENANCE

PREPARING MOWER FOR STORAGE

1. For long term storage, either drain gasoline from fuel tank or add a fuel additive to the gasoline. To drain gasoline, refer to Draining Gasoline, page 13. After fuel is drained, start engine and let it idle until all fuel is consumed and engine stops. If gasoline is not drained and a fuel stabilizer is not added, gum-like varnish deposits will form and cause poor engine operation, even starting problems.

Fuel can be left in gas tank only if a fuel stabilizer, such as Toro's Stabilizer/Conditioner, is added to gasoline before storing. Toro's Stabilizer/Conditioner is a petroleum distillate based stabilizer/conditioner. Toro does not recommend stabilizers with an alcohol base, such as ethanol, methanol or isopropyl. Use fuel stabilizer in recommended quantities as specified on container.

Under normal conditions, fuel additives remain effective in fuel for 6-8 months.

2. Drain oil: refer to Changing Crankcase Oil, page 13. After oil is drained, do not fill crankcase with oil until the following steps (3-10) are completed.

3. Remove spark plug and pour 2 tablespoons of SAE 10W30 oil into hole in cylinder. Pull starter rope slowly to coat inside of cylinder. Install spark plug and tighten to 15 ft-lb (20 N·m). **DO NOT INSTALL WIRE ON SPARK PLUG.**

4. Clean mower housing: refer to Cleaning Mower Housing, Discharge Tunnel and Plug, page 16.

5. Check condition of blade: refer to Inspecting/Removing/Sharpening Blade, page 14.

6. Tighten all nuts, bolts, and screws.

7. Clean dirt and chaff from cylinder, cylinder head fins, and blower housing. Also remove grass clippings, dirt, and grime from external parts of the engine, shrouding, and top of mower housing.

8. Clean air cleaner: refer to Servicing Air Cleaner, page 11.

9. Lubricate the wheels: refer to Lubrication, page 15.

10. Touch up all rusted or chipped paint surfaces. Toro Re-Kote paint is available from an Authorized TORO Service Dealer.

11. Fill crankcase with oil; refer to Fill Crankcase With Oil, page 5.

12. Store mower in a clean, dry place. Cover mower to keep it clean and protected.

PRODUCT IDENTIFICATION

A model and a serial number decal is located at rear of mower housing on hand push model and on underside of the control panel on the self-propelled model. Always refer to specific numbers on this decal in correspondence or when replacement parts are needed.

TORO SERVICE SUPPORT

If help - concerning safety, set-up, operation, maintenance, or troubleshooting - is ever needed, contact the local Authorized TORO Service Dealer or Distributor. Refer to the "Yellow Pages" for assistance. In addition to skilled service technicians, the dealer and distributor have factory approved accessories and replacement parts. Keep your Toro all TORO. Buy genuine TORO replacement parts and accessories.

OPTIONAL EQUIPMENT

For special conditions the following accessories may be purchased at your local authorized TORO Service Dealer.

1. Side Discharge Kit, Model No. 59168—Installs in seconds. Rear mounted in place of the grass bag. Disperses clippings while trimming on both sides (Fig. 32).

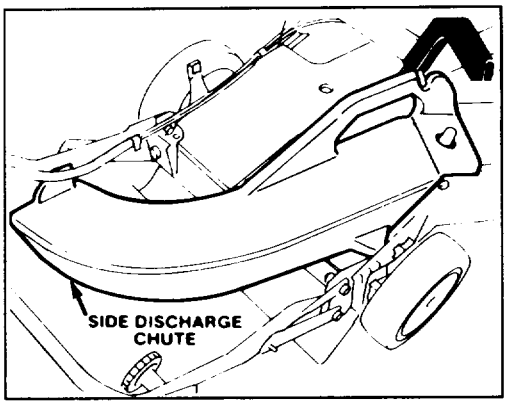

Figure 32

2. Dethatcher Kit, Model No. 59131—Installs in minutes. Front mounted for easy maneuverability. Spring tines loosen thatch for easy cutting (Fig. 33).

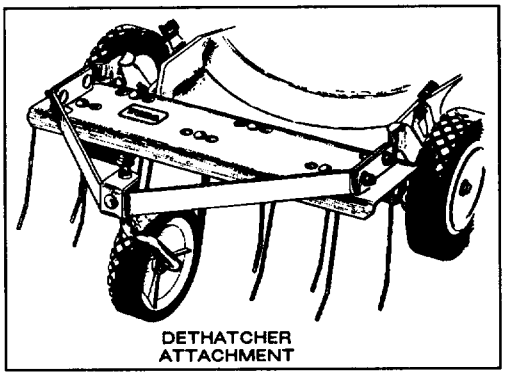

Figure 33

3. Spark Arrestor, Briggs & Stratton Part No. 398067—If a spark arrestor is required because of local, state, or federal regulations, it may be purchased at from an Authorized Toro Service Dealer. If mower is operated on any California forest, brush, or grass covered land without a properly operating spark arrestor, the operator is violating state law, Section 4442 Public Resources Code.